MODEL NO.	"L"	P/N
PIAT430UHFMTA	10000 [394]	97694
PIAT415UHFMTA	5000 [197]	83372
PIAT46UHFMTA	2000 [79]	73279

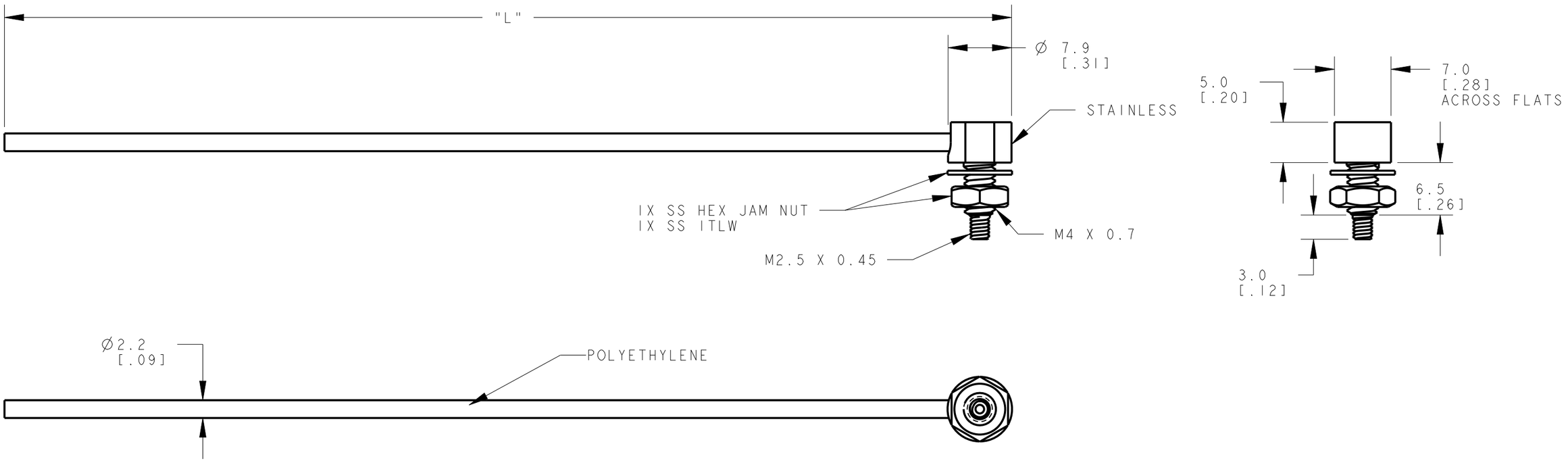

NOTES:
1. ALL DIMENSIONS ARE MILLIMETERS [INCHES] UNLESS OTHERWISE NOTED.
2. REFER TO "www.bannerengineering.com" FOR ADDITIONAL DATA AND SPECIFICATIONS.

This drawing is the property of BANNER ENGINEERING CORP. Any use or reproduction, in any form, without prior written permission of Banner is prohibited.
© Banner Engineering Corp.

THIRD ANGLE PROJECTION

BANNER ENGINEERING CORP.
www.bannerengineering.com

TITLE

PIAT4 SERIES UNTERMINATED HF TIGHT ANGLE

SIZE	DRAWING NO.	REV.
B	161894	A
SCALE 2:1	SHEET 1 OF 1	

CREO

ПРОМЭЛЕКТРОНИКА/ sales@prom-elec.com