Features



- Install an MP3 or WAV file, up to 4MB in size
- Sequential playback of multiple files
- Flash memory can be reprogrammed multiple times
- Compatible with Windows®(1), Linux®(2), or Mac®(3) operating systems
- Easy drag and drop file transfer
- Wide frequency response: 100 Hz - 20 kHz

Models

Model Key

TL70 Segment Housing		Audible Alarm	Housing Color
SG-TL70	–	AP = Programmable Audible	Blank = Black C = Gray

For example, SG-TL70-AP (Programmable audible in black housing).

For more information regarding TL70 Modular Tower Light Final Assemblies, refer to the following documents:

- TL70 Modular Tower Light Final Assembly Datasheet (p/n 182214)
- TL70 Wireless Modular Tower Light Datasheet (p/n 185469)
- TL70 Universal AC Voltage Modular Tower Light Datasheet (p/n 191349)

WARNING:

- **Risk of hearing loss**
- All effective warning horns produce loud sounds that could cause, in certain situations, permanent hearing loss.
- Install the device far enough away from potential listeners to limit their exposure while still maintaining its effectiveness. Reference OSHA Code of Federal Regulations 1910.95 Noise Standard for guidelines about permissible noise exposure levels.

Configure the DIP Switches

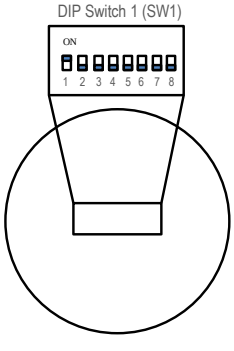

Input channel select–Use switch positions 1 through 6 on SW1, to select the channel that would be used to operate the audible module. Switch positions 7 and 8 are not used.

(1) Microsoft and Windows are trademarks of the Microsoft group of companies.
(2) Linux is a registered trademark of the Linux Foundation in the United States and/or other countries.
(3) Mac is a registered trademark of Apple Inc. in the United States and/or other countries.

Original Instructions
20-Aug-25

© Banner Engineering Corp. All rights reserved.
www.bannerengineering.com

196627
p/n: 196627 Rev. F

ПРОМЭЛЕКТРОНИКА/ sales@prom-elec.com

Programming the Audible Tower Module

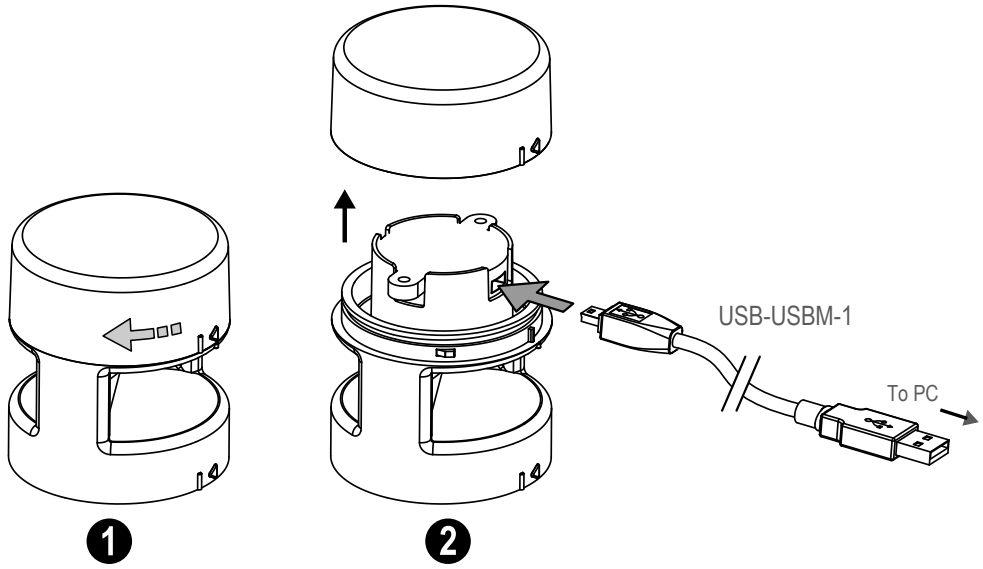

Loading Files into the SG-TL70-AP

The SG-TL7-AP has 4MB of on-board flash memory and can playback any WAV or MP3 audio file that is 4MB or smaller. If the file is too large, a program such as Audacity can be used to compress or shorten the file to decrease the size.

Multiple files can be loaded onto the SG-TL70-AP. Files playback according to the file name in alpha-numeric order.

> **NOTE:** Add a number to the beginning of the file name to create the order in which the files run. Files play consecutively without any pause.

To program the module:

1. Remove the module top cover by rotating counterclockwise.
2. Connect the programming cable (USB-USBM-1) from the PC's USB connection to the USB mini-connection of the audible module. The SG-TL70-AP is recognized by the PC as a USB flash drive. The default drivers for a USB drive are assigned to the device, as well as a unique disk drive letter assignment (such as D:).
3. Drag-and-drop the audio files that are saved on the PC to the USB drive location.
4. Assign numbers to each file to designate their playback order, otherwise files playback in alpha-numeric order.
5. Remove the cable from the audio module.
6. Re-install the top cover by aligning the protruding alignment marks and turning clockwise.
7. The audible module is now ready for use with a compatible TL70 DC Base or Universal Voltage AC Base.

When the selected Input Channel is activated, the audible module begins playing the files in sequential order.

Specifications

Supply Voltage and Current

B-TL70 (DC Base): 12 V DC to 30 V DC

Maximum current:
330 mA at 12 V DC
130 mA at 30 V DC

B-TL70-Z (Universal AC Voltage Base): 100 V AC to 240 V AC; 50/60 Hz

Maximum current:
95 mA at 120 V AC and 60 Hz
70 mA at 230 V AC and 50 Hz

Supply Protection Circuitry

Protected against transient voltages

Environmental Rating

IP50

Operating Conditions

-20 °C to +50 °C (-4 °F to + 122 °F)

95% at +50 °C maximum relative humidity (non-condensing)

Application Note

Volume Adjustment: The volume of an MP3 or WAV file can be modified to change the sound intensity over a limited range. Although Banner does not promote or publicize any particular audio software, it has been found that Audacity can easily be used to modify existing audio files. Audacity is a free open source audio software, available for download, at the following web address: http://www.audacityteam.org/.

File Size: MP3 files require less memory than WAV files. Converting files to MP3 allows additional files to be stored for playback on the device. Audacity can be used to convert WAV files to MP3 files.

© Banner Engineering Corp. All rights reserved.
www.bannerengineering.com

Construction

Audible segments and covers: polycarbonate

Operating Systems

Windows (any version)

Linux

Mac

Vibration and Mechanical Shock

Vibration 10 Hz to 55 Hz 0.5 mm p·p amplitude per IEC 60068-2-6

Shock 15G 11 ms duration, half sine wave per IEC 60068-2-27

Certifications

Banner Engineering BV
Park Lane, Culliganlaan 2F bus 3
1831 Diegem, BELGIUM

Turck Banner LTD Blenheim House
Blenheim Court
Wickford, Essex SS11 8YT
GREAT BRITAIN

Alarm

On response: 1 second

Maximum intensity (typical) at 2.5 kHz:

95 dB at 1 meter

Frequency range: 100 Hz to 20 kHz. Continuous tones of 2 kHz and above, may sound distorted due to sampling rate

Sampling rate: 48 kHz

Flash memory: Multiple files (up to 4MB) can be stored in sequential order for playback. Module is able to be re-programmed with new files for playback.

Repeating continuous playback; Restarts if power is removed, then reapplied.

Pre-installed file: 2.5 kHz steady tone

For programming use cable USB-USBM-1 or comparable USB to USB mini cable

Dimensions

All measurements are listed in millimeters [inches], unless noted otherwise. The measurements provided are subject to change.

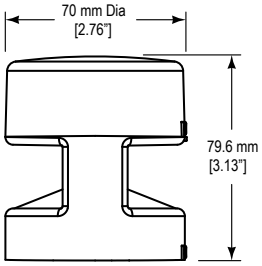

Banner Engineering Corp Limited Warranty

Banner Engineering Corp. warrants its products to be free from defects in material and workmanship for one year following the date of shipment. Banner Engineering Corp. will repair or replace, free of charge, any product of its manufacture which, at the time it is returned to the factory, is found to have been defective during the warranty period. This warranty does not cover damage or liability for misuse, abuse, or the improper application or installation of the Banner product.

THIS LIMITED WARRANTY IS EXCLUSIVE AND IN LIEU OF ALL OTHER WARRANTIES WHETHER EXPRESS OR IMPLIED (INCLUDING, WITHOUT LIMITATION, ANY WARRANTY OF MERCHANTABILITY OR FITNESS FOR A PARTICULAR PURPOSE), AND WHETHER ARISING UNDER COURSE OF PERFORMANCE, COURSE OF DEALING OR TRADE USAGE.

This Warranty is exclusive and limited to repair or, at the discretion of Banner Engineering Corp., replacement. **IN NO EVENT SHALL BANNER ENGINEERING CORP. BE LIABLE TO BUYER OR ANY OTHER PERSON OR ENTITY FOR ANY EXTRA COSTS, EXPENSES, LOSSES, LOSS OF PROFITS, OR ANY INCIDENTAL, CONSEQUENTIAL OR SPECIAL DAMAGES RESULTING FROM ANY PRODUCT DEFECT OR FROM THE USE OR INABILITY TO USE THE PRODUCT, WHETHER ARISING IN CONTRACT OR WARRANTY, STATUTE, TORT, STRICT LIABILITY, NEGLIGENCE, OR OTHERWISE.**

Banner Engineering Corp. reserves the right to change, modify or improve the design of the product without assuming any obligations or liabilities relating to any product previously manufactured by Banner Engineering Corp. Any misuse, abuse, or improper application or installation of this product or use of the product for personal protection applications when the product is identified as not intended for such purposes will void the product warranty. Any modifications to this product without prior express approval by Banner Engineering Corp will void the product warranties. All specifications published in this document are subject to change; Banner reserves the right to modify product specifications or update documentation at any time. Specifications and product information in English supersede that which is provided in any other language. For the most recent version of any documentation, refer to: www.bannerengineering.com.

For patent information, see www.bannerengineering.com/patents.

© Banner Engineering Corp. All rights reserved.
www.bannerengineering.com