MODEL NO.	"BL"	"TL"	"PL"	"L"	"D"	P/N
BTETAI.54.7S	7.5	1.5	1.00	56	.09	23006
BTETAI.56.7S	7.5	1.5	1.00	80	.09	23007
BTETAI.57S	7.5	1.5	1.00	84	.09	23008
BTETAI.58S	7.5	1.5	1.00	96	.09	23009
BTETAI.53SM600	7.5	1.5	1.00	36	.09	71986
BTETAI.59S	7.5	1.5	1.00	108	.09	22498
BTETA.756S	7.5	1.5	1.00	72	.046	22337
BTETA.754S	7.5	1.5	1.00	48	.046	22017
BTETAI.52S	7.5	1.5	1.00	24	.09	21959
BTETA.753S	7.5	1.5	1.00	36	.046	21794
BTETAI6S	7.5	1.5	1.00	72	.06	21763
BTETAI3S	7.5	1.5	1.00	36	.06	21762
BTETAI.53S	7.5	1.5	1.00	36	.09	21496

NOTES:

1. 'M600' SUFFIX INDICATES FIBER POTTED ON ANGLED END WITH EPOXY OPERATES IN MAX. TEMPERATURE OF 600°F.

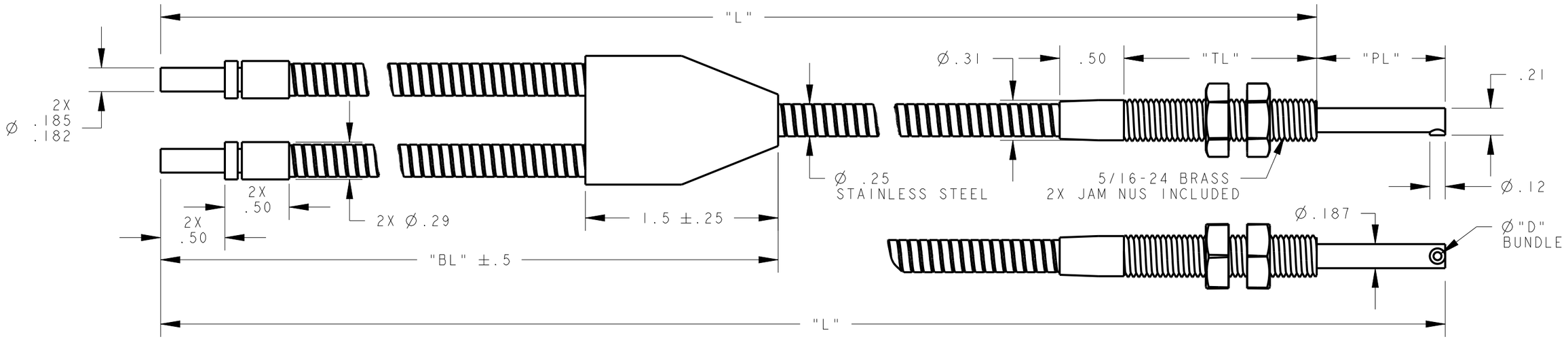

NOTES:
1. ALL DIMENSIONS ARE MILLIMETERS [INCHES] UNLESS OTHERWISE NOTED.

This drawing is the property of BANNER ENGINEERING CORP. and is proprietary in general and in detail. Its contents shall not be revealed to outside parties without written consent of BANNER.

THIRD ANGLE PROJECTION

BANNER ENGINEERING CORP.
P.O. BOX 9414
MINNEAPOLIS, MN 55440

TITLE

BTETAI.5 SERIES SS TERMINATED

SIZE	DRAWING NO.	REV.
B	161937	A

SCALE 5:4 | SHEET 1 OF 2

PRO/E

ПРОМЭЛЕКТРОНИКА/ sales@prom-elec.com

MODEL NO.	"BL"	"TL"	"PL"	"L"	"D"	P/N
BTETAI.58SM600	7.5	1.5	1.00	96	.09	93883
BTETAI.5.83S	4.5	1.5	1.00	10	.09	24870
BTETAI3SM600	7.5	1.5	1.00	36	.06	24871
BTETAI.8S	7.5	1.5	1.00	9	.06	00000
BTETAI.511S	7.5	1.5	1.00	132	.09	68597
BTETAI.525SM600	7.5	1.5	1.00	300	.09	71564
BTETAI.51S	7.5	1.5	1.00	12	.09	79020
BTETAI.525S	7.5	1.5	1.00	300	.09	24592
BTETAI.515S	7.5	1.5	1.00	180	.09	24591
BTETAI.52SM2.5	7.5	1.5	2.50	24	.09	00000
BTETAI.55S	7.5	1.5	1.00	60	.09	24053
BTETAI.51.5S	7.5	1.5	1.00	18	.09	23982
BTETAI2S	7.5	1.5	1.00	24	.06	00000
BTETAI1S	4.5	1.5	1.00	12	.06	23877
BTETAI.51SM2	4.5	1.5	2.00	12	.09	00000
BTETAI4S	7.5	1.5	1.00	48	.06	23363
BTETAI.56S	7.5	1.5	1.00	72	.09	23732
BTETAI.53SMSTMPL	7.5	.75	2.25	36	.09	23161

NOTES:
1. ALL DIMENSIONS ARE MILLIMETERS [INCHES] UNLESS OTHERWISE NOTED.

This drawing is the property of BANNER ENGINEERING CORP. and is proprietary in general and in detail. Its contents shall not be revealed to outside parties without written consent of BANNER.

THIRD ANGLE PROJECTION

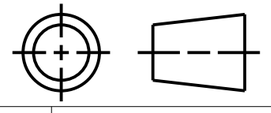

BANNER ENGINEERING CORP.
P.O. BOX 9414
MINNEAPOLIS, MN 55440

TITLE

BTETAI.5 SERIES SS TERMINATED

SIZE	DRAWING NO.	REV.
B	161937	A
SCALE 3:2	SHEET 2 OF 2	

PRO/E