MODEL NO.	"L"	P/N
PIRIX326T-VL	2000	87530
PIRIX323T-VL	1000	87529

NOTE - OPERATING TEMPERATURE -55°C ~ +70°C.
- MINIMUM BEND RADIUS R60.

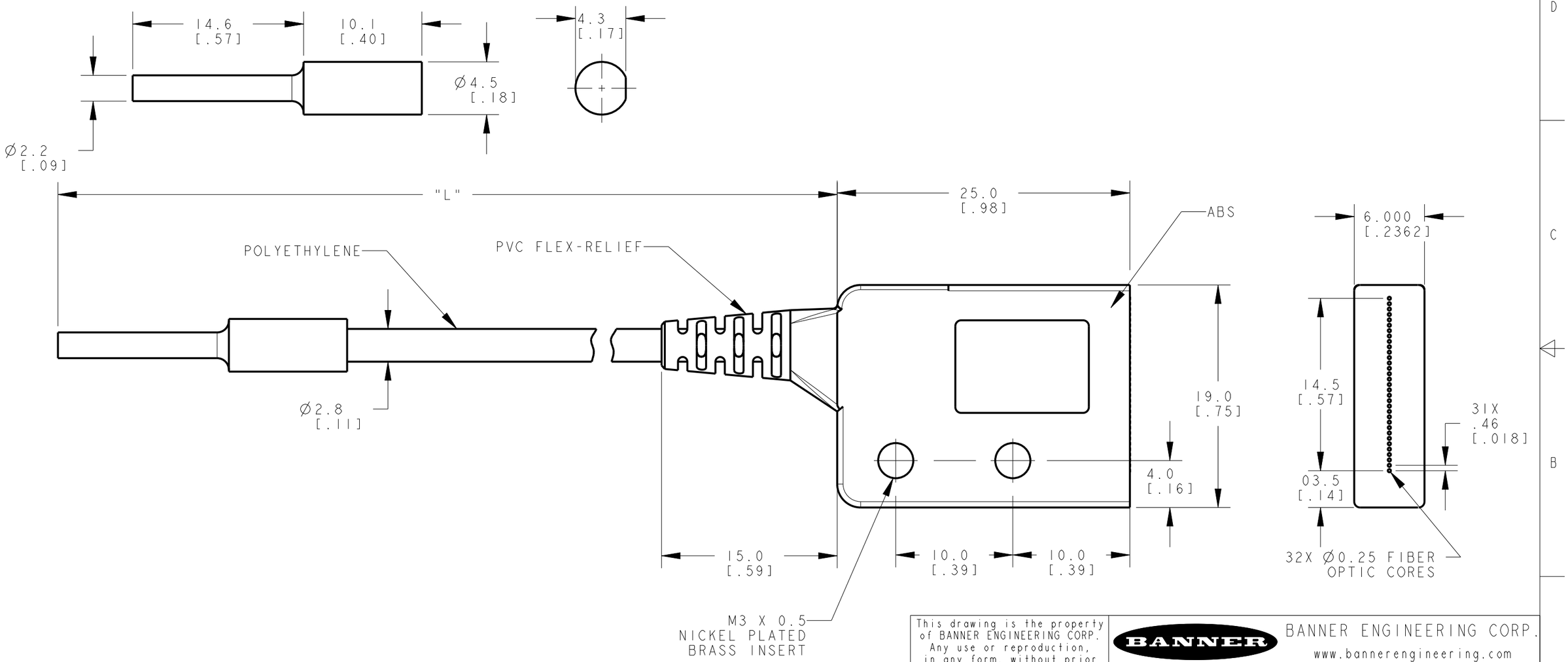

NOTES:
1. ALL DIMENSIONS ARE MILLIMETERS [INCHES] UNLESS OTHERWISE NOTED.
2. REFER TO "www.bannerengineering.com" FOR ADDITIONAL DATA AND SPECIFICATIONS.

This drawing is the property of BANNER ENGINEERING CORP. Any use or reproduction, in any form, without prior written permission of Banner is prohibited.
© 2015 Banner Engineering Corp.

THIRD ANGLE PROJECTION

BANNER ENGINEERING CORP.
www.bannerengineering.com

TITLE

PIRIX32 VALUE LINE SERIES TERMINATED

SIZE	DRAWING NO.	REV.
B	178358	A
SCALE 3:1	SHEET 1 OF 1	

CREO

ПРОМЭЛЕКТРОНИКА/ sales@prom-elec.com