SI-RF Non-Contact RF Safety Switch Product Manual

Original Instructions
p/n: 208885 Rev. N
05-Jun-26
© Banner Engineering Corp. All rights reserved. www.bannerengineering.com

ПРОМЭЛЕКТРОНИКА/ sales@prom-elec.com

Contents

Chapter 1 Product Overview 3
1.1 Models 3
1.2 Important... Read this before proceeding! 3
1.3 EU/UK Declaration of Conformity (DoC) 4
1.4 Overview 4

Chapter 2 Specifications 5
2.1 Dimensions 6

Chapter 3 Configuration Instructions 8
3.1 Safety Code for Operation 8
3.2 Teach the Safety Code 8

Chapter 4 Installation Instructions 9
4.1 Installation Requirements 9
4.2 Pass-Through Hazards and Perimeter Guarding 10
4.3 Mechanical Installation 10
4.4 Sensing Distance 11
4.5 Resetting the Inputs 13
4.6 Auxiliary Output/Information 13
4.7 In-Series Diagnostic Information 13
4.8 Electrical Installation 14
4.8.1 Protective Stop (Safety Stop) Circuits 14
4.8.2 Output Signal Switching Devices (OSSDs) and External Device Monitoring (EDM) 14
4.8.3 Wiring for Single PNP (SI-RFP) 15
4.8.4 Wiring for a Single 8-Conductor Sensor 16
4.8.5 Wire the Switch in Series 17
4.8.6 Wire the Switch in Series Using the Quick Disconnect 18

Chapter 5 Accessories 21
5.1 Cordsets 21
5.2 Adapters and Other Accessories 23
5.3 Safety Controllers 23
5.4 Universal (Input) Safety Modules 23

Chapter 6 Product Support and Maintenance 25
6.1 Maintenance and Service 25
6.2 Status Indicators 25
6.3 Information Available via ISD 26
6.4 Contact Us 28
6.5 Banner Engineering Corp Limited Warranty 28

© Banner Engineering Corp. All rights reserved. www.bannerengineering.com

Chapter Contents

1.1 Models 3
1.2 Important... Read this before proceeding! 3
1.3 EU/UK Declaration of Conformity (DoC) 4
1.4 Overview 4

Chapter 1 Product Overview

SI-RF Radio Frequency Safety Switch for interlocking and position monitoring

- Sensor - Actuator pair with Unique, High, and Low code options
- One SI-RF Safety Switch will meet Cat 4, PL e, or SIL CL 3 safety ratings
- Series connection of up to 32 sensors, maintaining the highest levels of safety
- Diagnostic options include In-Series Diagnostic (ISD) bussed signals and on-sensor LED codes
- PNP auxiliary outputs on select models indicate the door status
- Protection class rating of IP69



1.1 Models

Model	Device	SI-RF Models			
		Coding	Diagnostics	Reset	Connector
SI-RFST-UP8	Sensor	Unique	Series PNP	Automatic	250 mm cable with an 8-pin M12 quick disconnect
SI-RFST-HP8		High			
SI-RFST-LP8		Low			
SI-RFSL-UP8		Unique		Manual	
SI-RFSL-HP8		High			
SI-RFSL-LP8		Low			
SI-RFDT-UP8		Unique	In-Series Diagnostic (ISD)	Automatic	
SI-RFDT-HP8		High			
SI-RFDT-LP8		Low			
SI-RFDL-UP8		Unique		Manual	
SI-RFDL-HP8		High			
SI-RFDL-LP8		Low			
SI-RFPT-U2M		Unique	Single PNP	Automatic	2 m cable
SI-RFPT-H2M		High			
SI-RFPT-L2M		Low			
SI-RFPT-UP5		Unique			250 mm cable with an 5-pin M12 quick disconnect
SI-RFPT-HP5		High			
SI-RFPT-LP5		Low			
SI-RF-A	Actuator	Actuator/target for all switches			
SI-RF-A2		Low Profile Actuator/target for all switches			

In addition to the SI-RF sensor, a basic SI-RF system requires an actuator, a cable, and a safety monitoring device.

1.2 Important... Read this before proceeding!

The user is responsible for satisfying all local, state, and national laws, rules, codes, and regulations relating to the use of this product and its application. Banner Engineering Corp. has made every effort to provide complete application, installation, operation, and maintenance instructions. Please contact a Banner Applications Engineer with any questions regarding this product.

© Banner Engineering Corp. All rights reserved.
www.bannerengineering.com

The user is responsible for making sure that all machine operators, maintenance personnel, electricians, and supervisors are thoroughly familiar with and understand all instructions regarding the installation, maintenance, and use of this product, and with the machinery it controls. The user and any personnel involved with the installation and use of this product must be thoroughly familiar with all applicable standards, some of which are listed within the specifications. Banner Engineering Corp. makes no claim regarding a specific recommendation of any organization, the accuracy or effectiveness of any information provided, or the appropriateness of the provided information for a specific application.

1.3 EU/UK Declaration of Conformity (DoC)

Banner Engineering Corp. herewith declares that these products are in conformity with the provisions of the listed directives and all essential health and safety requirements have been met. For the complete DoC, please go to www.bannerengineering.com.

Product	Directive
SI-RF Radio Frequency Safety Switch	EU: Machinery Directive 2006/42/EC
	UKCA: Machinery (Safety) Regulations 2008

Representative in EU: Spiros Lachandidis, Managing Director, **Banner Engineering BV** Park Lane | Culliganlaan 2F bus 3 | 1831 Diegem, BELGIUM

Representative in UK: Tony Coghlan, Managing Director, **Turck Banner LTD** Blenheim House | Blenheim Court | Wickford, Essex SS11 8YT | Great Britain

1.4 Overview

Use the SI-RF Radio Frequency Safety Switch to monitor the position of a guard to detect its movement, opening, or removal. A "guard" can be a gate, door, cover, panel, barrier, or other physical means that separates an individual from a hazard. Safety switches will issue a signal to the machine control system to prevent or stop (halt) hazardous situations when the guard is not in the proper position. The SI-RF Safety Switch is designed for non-locking guarding applications, unless another means of locking is provided.

The SI-RF Safety Switch is considered a Type 4 interlocking device per ISO 14119 that are actuated by an electronic field interacting with the coded actuator typically mounted on the guard. Different levels of coded sensors are available: low, high, and unique.

Applications involving the use of the SI-RF Safety Switch should take into consideration the following standards:

- ISO 13849-1/2 - Safety of Machinery - Safety Related Parts of Control Systems
- ISO 12100 - Safety of Machinery - Risk Assessment and Risk Reduction
- ISO 14119 - Safety of Machinery - Interlocking Devices Associated with Guards
- ANSI B11.0 - Safety of Machinery - General Requirements and Risk Assessment
- ANSI B11.19 - Performance Criteria for Safeguarding

The SI-RF Safety Switch can be used individually or in series. A series string can consist of 1 to 32 units. The redundant safety inputs are only used for the serial connection of sensors (for an individual unit or last in the string they get tied to +24 V DC). The redundant safety outputs can be used for the serial connection of sensors or for the connection to the safety-related parts of the control system.

© Banner Engineering Corp. All rights reserved.

Chapter Contents

2.1 Dimensions..... 6

Chapter 2 Specifications

IMPORTANT: The SI-RF Safety Switch should be connected only to a SELV (Safety Extra-Low Voltage), for circuits without earth ground or a PELV (Protected Extra-Low Voltage), for circuits with earth ground power supply, according to EN/IEC 60950.

Rated supply voltage (U_e)
24 V DC; +25 %, - 20 %
Reverse polarity protection
The external voltage supply must be capable of buffering brief mains interruptions of 20 ms, as specified in IEC/EN 60204-1

Rated isolation voltage (U_i)
75 V DC

Rated conditional short-circuit current
100 A

No-load current (I_0)
≤ 50 mA

Transponder frequency
125 kHz

Switching frequency
≤ 1 Hz

Switch-off delay (t_a)
100 ms maximum + (7 ms × number of following ISD devices)

Time delay (t_v)
Maximum 2 s

Rated impulse withstand voltage (U_{imp})
500 V

Protection Class
according to EN IEC 61558 III

Enclosure
PA66 + PA6, Red

Environmental Rating
IP69

Repeatability (R)
0.1 x S_n

Shock and Vibration
according to EN IEC 60947-5-2

Construction
Tension Relief: TPE, black
Cable: PUR, black
Standard QD: Nickel Plated Brass
CR QD: 4VA grade Stainless Steel

Altitude
≤ 2000 m NHN

EMC
according to EN IEC 60947-5-3 and EN 61326-3-1

Mounting
2 holes Ø 4,5 (for M4 screws)

Ambient and Storage temperature
–25 °C to +70 °C (–13 °F to +158 °F)

Approvals and Certifications

Q1 and Q2 Safety Output
Voltage level: according to Typ 3 EN 61131-2
Rated Operating Current (I_e): 100 mA
Test Pulse Duration: 70 µs
Test Pulse Rate: 1 s
Maximum Capacitive Load: 100 nF
Switching Elements: Sustained short-circuit and overload protection
Type of Short Circuit Protection: thermal / digital (clocking)
Switching Element Function: PNP, Normally Open
Leakage Current (I_r): ≤ 1 mA DC
Voltage Drop (U_d): ≤ 3 V
Use Category: DC-13

PNP/OUT Auxiliary Output
Rated Operating Current (I_e): 10 mA
Voltage Drop (U_d): ≤ 3 V
Switching Elements: Sustained short-circuit and overload protection
Type of Short Circuit Protection: current limited

Maximum Relative Humidity
93% at 40 °C without condensation

Indication
1 × LED red/green operating state
1 × LED amber actuating state

Maximum Cable Length Between Devices
30 m
Of these 30 meters, only 10 meters can be 8-conductor cable. The capacitance between the inputs (I1 and I2) to outputs (Q1 and Q2) must be less than 500 pF.

Standards
EN 60947-1, EN 60947-5-2, EN 61326-3-1
EN ISO 13849-1, EN 62061, EN 60947-5-3, EN ISO 13849-2
EN 60204-1, ETSI EN 301489-1, ETSI EN 300330-1

Directive
2006/42/EG (Safety-of-Machinery-Directive)
2014/53/EU (RED)
2011/65/EU (RoHS II)
2014/30/EU (EMC)
2012/19/EU (EU-WEEE II)

Safety Data
Up to PL (e)
Category 4
PFH_D 6 × 10^{-9} 1/h
SIL CL 3
Service Life: 20 years
according to EN ISO 13849-1
according to DIN EN 62061

TÜV Nord, cCSAus (class 2 Power source)

© Banner Engineering Corp. All rights reserved.
www.bannerengineering.com

FCC ID: 2ABA6SRFB

IC: 11535A-SRFB

This equipment has been tested and found to comply with the limits for a Class A digital device, pursuant to Part 15 of the FCC Rules. These limits are designed to provide reasonable protection against harmful interference when the equipment is operated in a commercial environment. This equipment generates, uses, and can radiate radio frequency energy and, if not installed and used in accordance with the instruction manual, may cause harmful interference to radio communications. Operation of this equipment in a residential area is likely to cause harmful interference in which case the user will be required to correct the interference at his own expense.

This device complies with CAN ICES-3 (A)/NMB-3(A). Operation is subject to the following two conditions: 1) This device may not cause harmful interference; and 2) This device must accept any interference received, including interference that may cause undesired operation.

Changes or modifications not expressly approved by the party responsible for compliance could void the user's authority to operate the equipment.

Banner Engineering BV
Park Lane, Culliganlaan 2F bus 3
1831 Diegem, BELGIUM

Turck Banner LTD Blenheim House
Blenheim Court
Wickford, Essex SS11 8YT
GREAT BRITAIN

NCC* (Taiwan): CCAK22LPxxxxTx

低功率警語 (Low Power notice):

取得審驗證明之低功率射頻器材，非經核准，公司、商號或使用者均不得擅自變更頻率、加大功率或變更原設計之特性及功能。低功率射頻器材之使用不得影響飛航安全及干擾合法通信；經發現有干擾現象時，應立即停用，並改善至無干擾時方得繼續使用。前述合法通信，指依電信管理法規定作業之無線電通信。低功率射頻器材須忍受合法通信或工業、科學及醫療用電波輻射性電機設備之干擾。

* 適用機型 (Applicable models): SI-RFDT-HP8, SI-RFDT-LP8, SI-RFDT-UP8, SI-RFPT-H2M, SI-RFPT-L2M, SI-RFPT-U2M.

2.1 Dimensions

All measurements are listed in millimeters, unless noted otherwise. The measurements provided are subject to change.

Figure 1. SI-RF Safety Switch Sensor

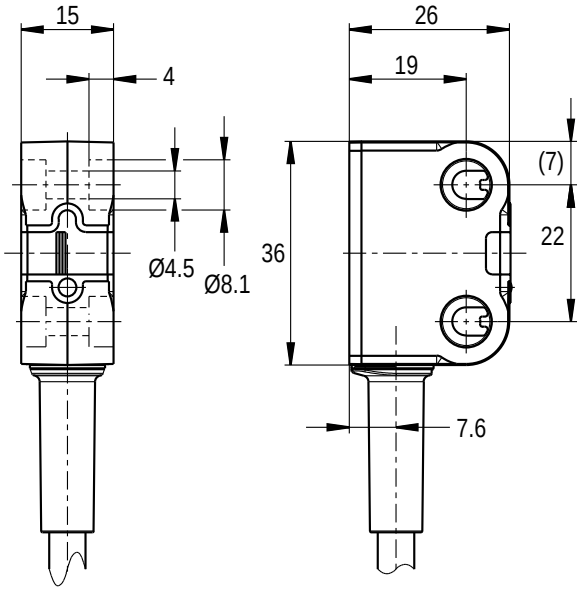

© Banner Engineering Corp. All rights reserved.
www.bannerengineering.com

Figure 2. SI-RF Safety Switch Actuator

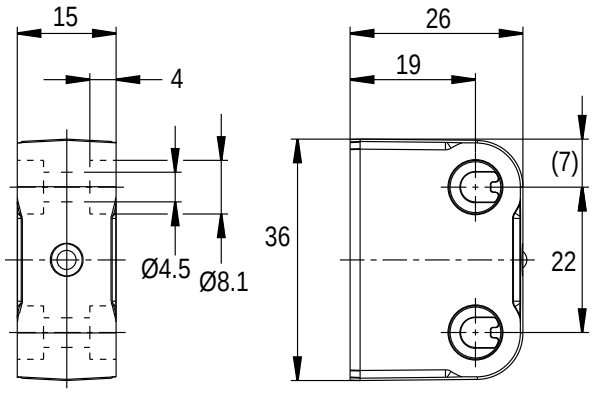

Figure 3. SI-RF Safety Switch -A2 Actuator

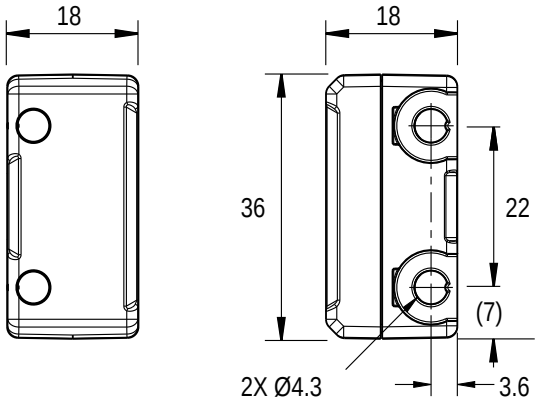

© Banner Engineering Corp. All rights reserved.
www.bannerengineering.com

Chapter Contents

3.1 Safety Code for Operation 8
3.2 Teach the Safety Code 8

Chapter 3 Configuration Instructions

3.1 Safety Code for Operation

The actuator of the SI-RF Safety Switch system has a non-modifiable safety code for distinct and error-free identification.

This code must be submitted to the SI-RF Safety Switch and permanently saved in the SI-RF Safety Switch. Three different coding levels are available:

- Low (L)—The SI-RF Safety Switch accepts any actuator.
- High (H)—The SI-RF Safety Switch only accepts the last taught-in actuator, a maximum of 12 teach-in processes are possible.
- Unique (U)—The SI-RF Safety Switch only accepts the taught-in actuator, and only one teach-in process is possible.

3.2 Teach the Safety Code

1. Position the new actuator in front of the SI-RF Safety Switch.
2. Energize the SI-RF Safety Switch for a minimum of 5 seconds.

   The amber and green LED on the SI-RF Safety Switch flash with flash code 6 for 1.5 seconds (see "Status Indicators" on page 25). The new actuator code is stored temporarily.
3. Disconnect the SI-RF Safety Switch from the supply voltage.
4. With the new actuator still positioned in front of the SI-RF Safety Switch, again energize the switch for a minimum of 5 seconds.

   The amber and the green LED on the SI-RF Safety Switch flash with flash code 6 for 3 seconds. The new actuator code is saved in the SI-RF Safety Switch.

If a different actuator code is read on the second power-up, the temporarily stored code is lost and you must re-start the process.

> **NOTE:** If, after this process is followed, the Amber LED is still flashing BC1, disconnect the output wires. If the Amber LED turns on solid, the outputs could be shorted to a voltage source.

© Banner Engineering Corp. All rights reserved.
www.bannerengineering.com

Chapter Contents

4.1 Installation Requirements 9
4.2 Pass-Through Hazards and Perimeter Guarding 10
4.3 Mechanical Installation 10
4.4 Sensing Distance 11
4.5 Resetting the Inputs 13
4.6 Auxiliary Output/Information 13
4.7 In-Series Diagnostic Information 13
4.8 Electrical Installation 14

Chapter 4 Installation Instructions

4.1 Installation Requirements

The following general requirements and considerations apply to the installation of interlocked gates and guards for the purpose of safeguarding. In addition, the user must refer to the relevant regulations and comply with all necessary requirements. See ANSI B11.19, or ISO 14119 and ISO 14120, or the appropriate standard.

Hazards guarded by the interlocked guard must be prevented from operating until the guard is closed; a stop command must be issued to the guarded machine if the guard opens while the hazard is present. Closing the guard must not, by itself, initiate hazardous motion; a separate procedure must be required to initiate the motion.

Locate the guard an adequate distance from the danger zone (so the hazard has time to stop before the guard is opened sufficiently to provide access to the hazard). Guard locking or supplemental safeguarding must be used if the overall stopping time of the machine or the time to remove the hazard is greater than the time to access the guarded area. The guard must open either laterally or away from the hazard, not into the safeguarded area. The guard also should not be able to close by itself and activate the interlocking circuitry. The installation must prevent personnel from reaching over, under, around or through the guard to access the hazard. Any openings due to positioning, movement, or misalignment in the guard must not allow access to the hazard—see ANSI B11.19, ISO 13855, ISO 13857, or the appropriate standard.

The guard must be strong enough and designed to protect personnel and contain hazards within the guarded area that can be ejected, dropped, or emitted by the machine. Mount the SI-RF Safety Switch securely so that the physical position cannot shift, using reliable fasteners that require a tool to remove. Mounting slots in the housing, if provided, are for initial adjustment only; final mounting holes (round) must be used for permanent location. The switches, actuating systems, and actuators must not be used as a mechanical or end-of-travel stop.

When the guard is closed, the actuator is guided to the sensor. When the switch on distance is reached, the sensor detects the actuator code. If the sensor detects an acceptable code it turns the output signal switch device (OSSD) safety outputs (OSSD1 and OSSD2) ON. When the guard is opened, the actuator is removed from the response range of the sensor. The sensor switches the safety outputs (OSSD1 and OSSD2) OFF.

See "Mechanical Installation" on page 10, "Electrical Installation" on page 14, *Switching Diagrams*, and "Specifications" on page 5 for additional information.

Design and install the safety switches and actuators so that they cannot be easily defeated. Measures to minimize defeat (bypassing) of interlocking safety switches include:

- Minimizing motivation for defeating interlocking by providing training, supervision, and efficient means for machine setup/adjustment, operation and maintenance
- Limiting accessibility to the interlocking device, such as mounting out of reach, mounting behind a physical obstruction, mounting in a concealed position
- Preventing the switch or the actuator from being disassembled or repositioned that compromises the safety function. (for example, welding, one-way screws, riveting)
- Using hardware that requires a tool to remove that is not readily available.

© Banner Engineering Corp. All rights reserved.
www.bannerengineering.com

WARNING:
- **Properly Install the Interlocked Guards**
- Failure to follow these guidelines could result in serious injury or death.
- At a minimum, the interlocked guard must prevent hazards when not fully closed and must prevent access to the hazards through any opening in the guard.
- Install the safety switches and actuators so they cannot be easily defeated and are not used as a mechanical or end-of-travel stop.
- The user must refer to the relevant regulations and comply with all necessary requirements. See ANSI B11.19, or ISO 14119 and ISO 14120, or the appropriate standard.

CAUTION:
- **Do not use the safety switch as a mechanical or end-of-travel stop.**
- Catastrophic damage can cause the safety switch to fail in an unsafe manner (that is, loss of the switching action).
- Limit the movement or rotation of the guard to prevent damage to the safety switch or the actuator.

4.2 Pass-Through Hazards and Perimeter Guarding

A pass-through hazard is associated with applications where personnel may pass through a safeguard (which issues a stop command to remove the hazard), and then continues into the guarded area, such as in perimeter guarding. Subsequently, their presence is no longer detected, and the related danger becomes the unexpected start or restart of the machine while personnel are within the guarded area.

Eliminate or reduce pass-through hazards whenever possible—see ANSI B11.19 and ANSI B11.20 or ISO 11161. One method to mitigate the risk is to ensure that once tripped, either the safeguarding device, the safety related part of the control system, or the guarded machine's MSCs/MPCEs will latch in an OFF condition. The latch must require a deliberate manual action to reset that is separate from the normal means of machine cycle initiation.

This method relies upon the location of the reset switch as well as safe work practices and procedures to prevent an unexpected start or restart of the guarded machine. All reset switches must be:
- Outside the guarded area
- Located to allow the switch operator a full, unobstructed view of the entire guarded area while the reset is performed
- Out of reach from within the guarded area
- Protected against unauthorized or inadvertent operation (such as through the use of rings or guards)

If any areas within the guarded area are not visible from the reset switch, additional safeguarding must be provided.

WARNING:
- **Perimeter guarding applications**
- Failure to observe this warning could result in serious injury or death.
- Use lockout/tagout procedures per ANSI Z244.1, or use additional safeguarding as described by ANSI B11.19 safety requirements or other applicable standards if a passthrough hazard cannot be eliminated or reduced to an acceptable level of risk.

4.3 Mechanical Installation

IMPORTANT: Install a safety switch in a manner that discourages tampering or defeat. Mount switches to prevent bypassing of the switching function at the terminal chamber or Quick Disconnect (QD). A switch and its actuator must never be used as a mechanical stop. Overtravel may cause damage to switch.

All mounting hardware is supplied by the user. Fasteners must be of sufficient strength to guard against breakage. Use of permanent fasteners or locking hardware is recommended to prevent the loosening or displacement of the actuator and the switch body. The mounting holes (4.5 mm) in the switch and actuator body accept M4 (#6) hardware.

© Banner Engineering Corp. All rights reserved.
www.bannerengineering.com

Mount the sensor and actuator such that the position cannot be changed after installation/adjustment. Mount the switch securely on a solid, stationary surface. Prevent the loosening of mounting hardware by using lock washers, thread-locking compounds, etc. Only use slots for initial positioning. Pins, dowels, and splines can be used to prevent movement of the switch and the actuator.

Install the SI-RF Safety Switch to prevent false or unintended actuation and intentional defeat.

Locate the sensor and actuator to allow access for functional checks, maintenance, and service or replacement. The installation should provide suitable clearances, be readily accessible, and allow access to the actuator and sensor.

CAUTION:

- Overtightening the units during installation can twist the housing and affect the sensor's performance.
- Do not overtighten the units during installation.

IMPORTANT: It is the responsibility of the machine builder (user) to make sure the series wiring/cabling is not easily manipulated by an operator to defeat the safety function(s); for example, cannot remove a switch from the chain.

4.4 Sensing Distance

Figure 4. Actuation directions

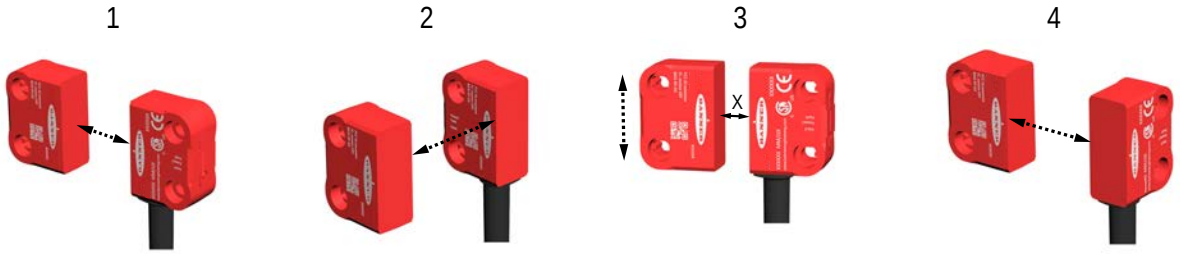

The switching distances of the standard actuation direction 1 are listed. The distances noted are for a sensor working with the standard actuators (**SI-RF-A** and **SI-RF-A2**).

Table 1. Sensing Distance (Only in conjunction with actuator SI-RF-A)

		Minimum (mm)	Typical (mm)	Maximum (mm)
Rated sensing distance	S_n		13	
Assured sensing distance - On	S_{ao}	10		
Hysteresis	H		2	
Assured sensing distance - Off	S_{ar}			25

© Banner Engineering Corp. All rights reserved.
www.bannerengineering.com

Figure 5. Detection range

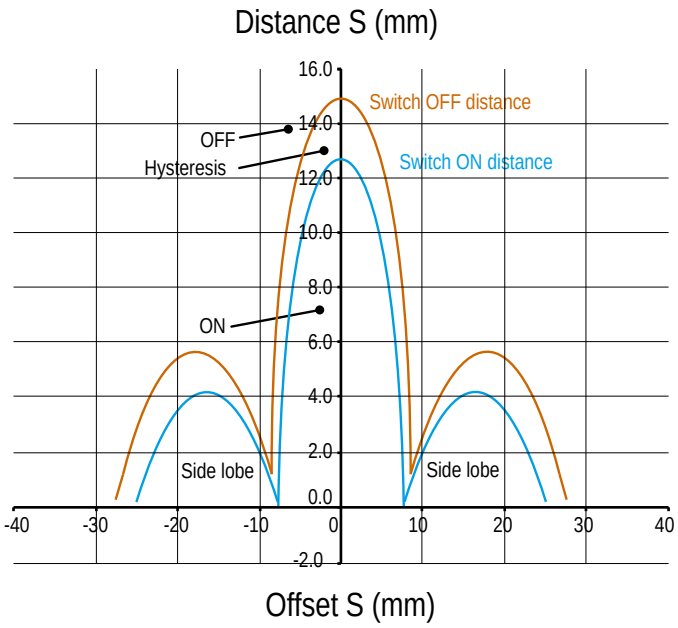

Within the detection range, there are "side lobes", in which the sensor can also activate. In an application with actuation direction 3, maintain a minimum distance X ≥ 5 mm between the SI-RF Safety Switch and actuator to ensure there is no activation within the side lobes.

The specified sensing distances can only be reached if the following conditions are met:

- Do not install the sensors near magnets or strong magnetic fields.
- Do not flush mount the sensor and actuator to metallic materials. Metal can influence the sensing distances.

IMPORTANT: When multiple units are mounted next to each other, there must be a minimum 100 mm distance between each sensor to ensure trouble-free operation.

IMPORTANT: If two actuators are used to activate one sensor, the actuators must have a separation distance of at least 20 mm (measured from the side of the housings).

Figure 6. Sensor and actuator active areas

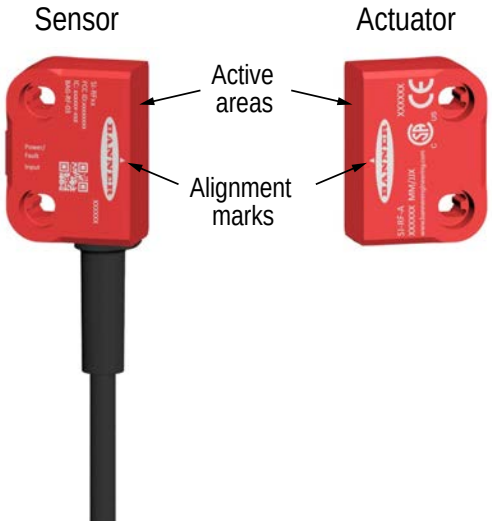

Only authorized personnel should install these devices. Any of the shown mounting positions and approach directions may be used. Install the SI-RF Safety Switch so that the display is visible. The triangular symbols serve for the alignment and should point to each other.

© Banner Engineering Corp. All rights reserved.
www.bannerengineering.com

Immediately replace any damaged SI-RF Safety Switch or actuator components. They can be replaced separately, with the exception of the Unique (U) coded version. If you are using the Unique (U) coded version, the SI-RF Safety Switch and actuator must always be replaced together.

4.5 Resetting the Inputs

The reset function forces a local confirmation that the safety outputs are switched on after closing the movable safety guard.

If the moveable guard is opened using a sensor with a reset function, close and open the reset button within 0.25 seconds (minimum) to 1 second (maximum), after the guard has been closed.

The reset function only applies to the sensor with the reset functionality. This reset feature allows for a local reset at a given guard but does not allow for an entire safety system reset. If a chain of sensors is cascaded (see "Wire the Switch in Series" on page 17), the reset function only applies to SI-RF 3. If SI-RF 1 or 2 are opened and then closed, the outputs will switch on after the guard is closed, without actuating the reset button.

CAUTION:

- When power is switched on and the guard is in the closed position, the safety outputs switch on without actuating the reset button.
- Automatic reset at power-up must be addressed in the customer's controls.

WARNING:

- Use of Auto or Manual Restart
- Failure to follow these instructions could result in serious injury or death.
- Application of power to the Banner device, the closing of the movable safety guard, or the reset of a manual restart condition MUST NOT initiate dangerous machine motion. Design the machine control circuitry so that one or more initiation devices must be engaged (in a conscious act) to start the machine - in addition to the Banner device going into Run mode.

4.6 Auxiliary Output/Information

The PNP output models (**SI-RFS** and **SI-RFP**) have a diagnostic PNP output. The PNP Diagnostic is not safety-related.

The PNP Diagnostic output indicates whether the right actuator has been detected (for example, the door is closed).

- Output high (conducting) - Actuator not detected
- Output low (open or non-conducting) - Actuator detected

When the **SI-RFS** sensors are cascaded, the output only signifies the actuator status of its sensor, not the others in the string. With manual reset models (**SI-RFSL**), the auxiliary output changes back to the low state when the actuator is sensed (does not wait for the reset).

Note that the switching point of the auxiliary output might not match the switching point of the safety outputs.

The ISD models (**SI-RFD**) do not have an auxiliary output.

4.7 In-Series Diagnostic Information

The information transmitted via the In-Series Diagnostic (ISD) interface is not safety-related. The diagnostic technology allows a wide range of sensor information to be loaded into the machine control system.

To interpret the information, Banner diagnostic modules are available, including the **SI-RF-DM1** and **-DM2** Diagnostic Modules and the **SC10-2roe** or **XS26-ISDx** Safety Controller. Refer to the instruction manuals for detailed information on the diagnostic devices. By means of diagnostics, the following information can be transmitted, among others:

- Door status (open, closed, or faulted)
- Detection of misalignment (marginal signal strength of RF field)
- Detection of under-voltages in the series connection
- Attempts to defeat an RF gate switch

© Banner Engineering Corp. All rights reserved.
www.bannerengineering.com

For a complete list of the diagnostics information, see "Information Available via ISD" on page 26.

At this time this information can be refined via the following interfaces:

- USB—display of the sensor information on the PC (requires using an **SI-RF-DM1** Diagnostic Module or an **SC10-2roe** or **XS26-ISDx** Safety Controller)
- IO-Link—bus independent data reading into the control system (requires using the **SI-RF-DM1** or **SI-RF-DM2** Diagnostic Modules and an IO-Link master)
- Industrial Ethernet Protocols—Bus data reading into the control system (requires using the **SC10-2roe** or **XS26-ISDx** Safety Controller)

4.8 Electrical Installation

WARNING:

- **Risk of electric shock**
- Use extreme caution to avoid electrical shock. Serious injury or death could result.
- Always disconnect power from the safety system (for example, device, module, interfacing, etc.), guarded machine, and/or the machine being controlled before making any connections or replacing any component. Lockout/tagout procedures might be required. Refer to OSHA 29CFR1910.147, ANSI Z244-1, or the applicable standard for controlling hazardous energy.
- Make no more connections to the device or system than are described in this manual. Electrical installation and wiring must be made by a Qualified Person[1] and must comply with the applicable electrical standards and wiring codes, such as the NEC (National Electrical Code), NFPA 79, or IEC 60204-1, and all applicable local standards and codes.

4.8.1 Protective Stop (Safety Stop) Circuits

A protective stop (safety stop) allows for an orderly cessation of motion for safeguarding purposes, which results in a stop of motion and removal of power from the Machine Primary Control Elements (MPCE) (assuming this does not create additional hazards).

A protective stop circuit typically comprises a minimum of two normally open contacts from forced-guided, mechanically linked relays, which are monitored through External Device Monitoring (EDM) to detect certain failures, to prevent the loss of the safety function. Such a circuit can be described as a "safe switching point".

Typically, protective stop circuits are either single-channel, which is a series connection of at least two normally open contacts; or dual-channel, which is a separate connection of two normally open contacts. In either method, the safety function relies on the use of redundant contacts to control a single hazard. If one contact fails ON, the second contact arrests the hazards and prevents the next cycle from occurring.

The interfacing of the protective stop circuits must be accomplished so that the safety function cannot be suspended, overridden, or defeated, unless accomplished in a manner of the same or greater degree of safety as the machine's safety-related control system that includes the SI-RF Safety Switch.

A Banner XS26 Safety Controller with XS1ro or XS2ro Relay Expansion Module, Banner SC10-2roe Safety Controller, or Banner UM-FA-xA Universal Safety Module provides a series connection of redundant contacts that form protective stop circuits for use in either single-channel or dual-channel control.

4.8.2 Output Signal Switching Devices (OSSDs) and External Device Monitoring (EDM)

The SI-RF Safety Switch is able to detect faults on OSSD1 and OSSD2. These faults include short circuits to +24 V DC and 0 V, and between OSSD1 and OSSD2.

Both OSSD outputs must be connected to the machine control so that the machine's safety-related control system interrupts the circuit or power to the machine primary control element(s) (MPCE), resulting in a non-hazardous condition.

Final switching devices (FSDs) typically accomplish this when the OSSDs go to an OFF state.

[1] A person who, by possession of a recognized degree or certificate of professional training, or who, by extensive knowledge, training and experience, has successfully demonstrated the ability to solve problems relating to the subject matter and work.

© Banner Engineering Corp. All rights reserved.
www.bannerengineering.com

Refer to the output specifications and these warnings before making OSSD output connections and interfacing the SI-RF Safety Switch to the machine.

WARNING:
- **Interfacing both output signal switching devices (OSSD)**
- Failure to follow these instructions could result in serious injury or death.
- Unless the same degree of safety is maintained, never wire an intermediate device(s) (PLC, PES, PC) between the safety module outputs and the master stop control element it switches such that a failure causes a loss of the safety stop command or the failure allows the safety function to be suspended, overridden, or defeated.
- Connect both OSSD outputs to the machine control so that the machine's safety-related control system interrupts the circuit to the machine primary control element(s), resulting in a non-hazardous condition.

WARNING:
- OSSD Interfacing
- Failure to properly interface the OSSD Outputs to the guarded machine could result in serious injury or death.
- To ensure proper operation, the Banner device output parameters and machine input parameters must be considered when interfacing the Banner device OSSD outputs to machine inputs. Machine control circuitry must be designed so that the maximum load resistance value is not exceeded and that the maximum specified OSSD Off-state voltage does not result in an On condition.

External device monitoring (EDM) is a function used to monitor the state of the external, positively guided (mechanically linked) machine control contacts (Final Switching Devives (FSD) and/or MPCEs). The SI-RF Safety Switch does not include the EDM function. As a result, the SI-RF Safety Switch should be used with an external safety monitoring device that monitors the status of the two SI-RF Safety Switch OSSDs and is capable of providing the EDM function.

Examples of appropriate external safety monitoring devices include Banner SC10-2roe and XS/SC26 Safety Controllers; Banner UM-FA-9A and UM-FA-11A Universal Input Safety Modules; and Safety PLCs.

WARNING:
- The SI-RF Safety Switch does not have external device monitoring (EDM).
- If EDM is required for the application, it must be implemented in the external control.

Fault-Tolerant Output Feature

Faults that do not immediately compromise the safe operation of the SI-RF Safety Switch (for example safety output to external potential, crosswire short safety output) result in a delayed switch-off of the safety outputs.

The safety outputs switch off when the error warning exceeds 20 minutes. In case of error warning, the red LED flashes code BC2.

Use this fault-tolerant output feature to run down the machinery in a controlled manner. After fixing the fault, the error message is confirmed by a voltage reset. The safe outputs enable and allow a restart.

4.8.3 Wiring for Single PNP (SI-RFP)

Five-conductor, cannot be wired in series

A movable safety guard is monitored through one SI-RF Safety Switch. The safety outputs of the SI-RF Safety Switch are connected to a safety monitoring module. When the safety guard is closed (actuator detected), the SI-RF Safety Switch switches on its safety outputs.

When used individually, the SI-RFP series offers a simple 5-pin wiring scheme. Use the optional PNP auxiliary output to transfer non-safety-related status information.

© Banner Engineering Corp. All rights reserved.
www.bannerengineering.com

Pin	Wire Color	SI-RFPT-xP5	SI-RFPT-x2M
1	Brown	+24 V DC	+24 V DC
2	White	OSSD1	OSSD1
3	Blue	0 V DC	0 V DC
4	Black	OSSD2	OSSD2
5	Gray	PNP OUT (Auxillary Output)	PNP OUT (Auxillary Output)

Figure 7. Wiring for a single PNP

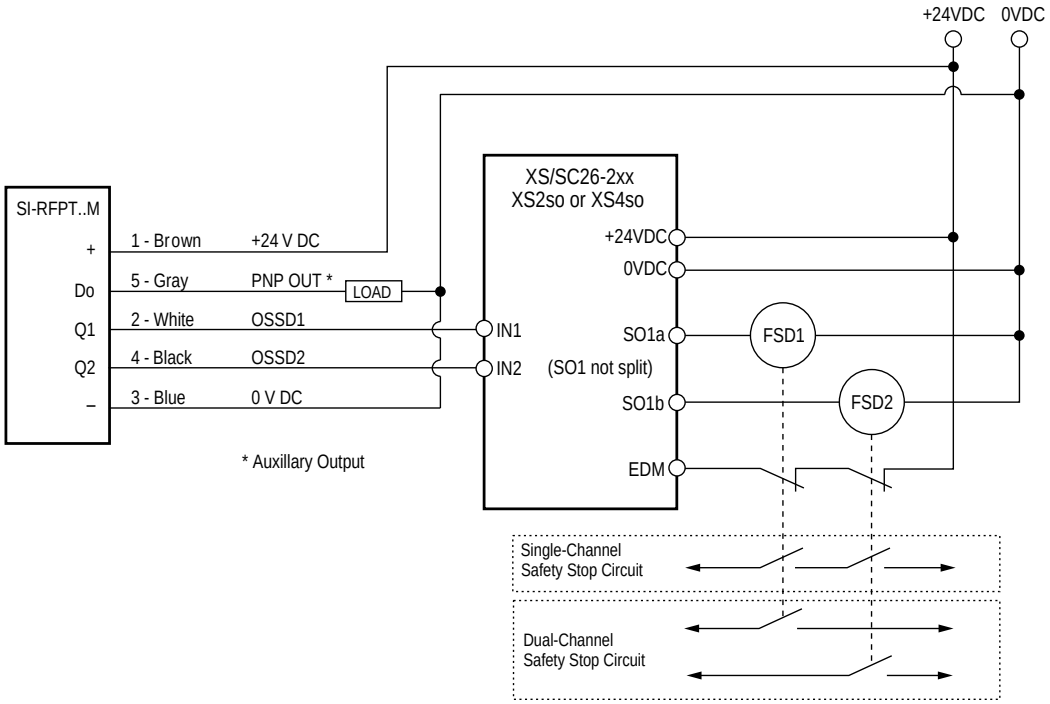

4.8.4 Wiring for a Single 8-Conductor Sensor

The 8-pin sensors have one pair of OSSD outputs (Q1/Q2), one pair of inputs (I1/I2) that must be high (+24 V DC) before the outputs can turn on, one +24 V DC input, and one 0 V DC input. Some models have a reset input that receives +24 V DC to reset the unit. Some models have an Auxillary PNP output (Do). The following table describes the wiring of the different model options.

Pin	SXA-8xxD Wire Color	Pin/Wire Function			
		SI-RFST-xP8	SI-RFSL-xP8	SI-RFDT-xP8	SI-RFDL-xP8
1	White	+24 V DC	+24 V DC	+24 V DC	+24 V DC
2	Brown	OSSD1	OSSD1	OSSD1	OSSD1
3	Green	0 V DC	0 V DC	0 V DC	0 V DC
4	Yellow	OSSD2	OSSD2	OSSD2	OSSD2
5	Gray	Input1	Input1	Input1	Input1
6	Pink	Input2	Input2	Input2	Input2
7	Blue	PNP OUT (Auxillary Output)	PNP OUT (Auxillary Output)	No Function	No Function
8	Red	No Function	Reset (+ In)	No Function	Reset (+ In)

© Banner Engineering Corp. All rights reserved.
www.bannerengineering.com

Figure 8. Wiring for a single 8-conductor sensor

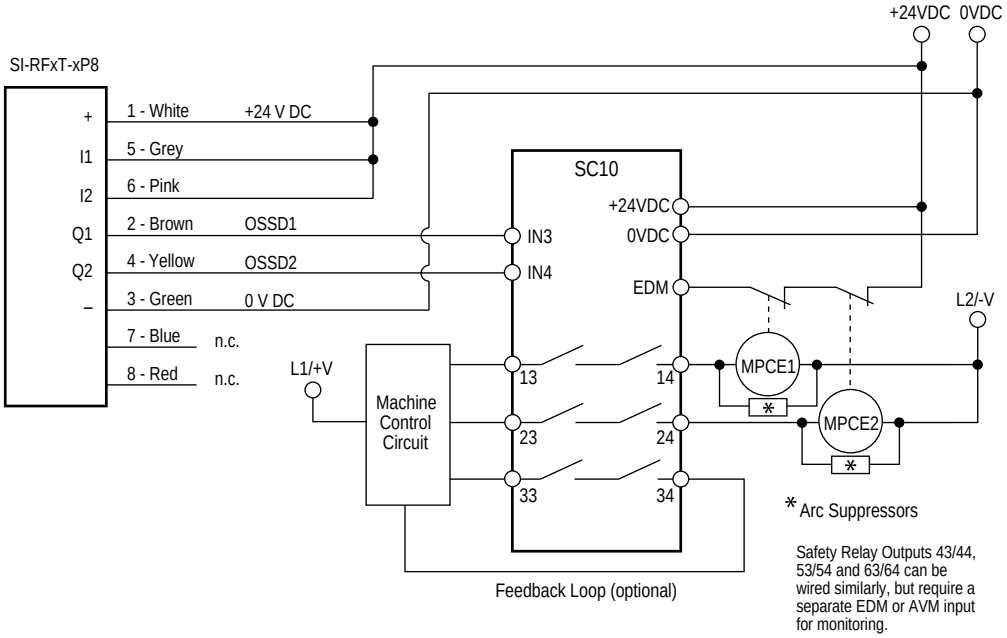

4.8.5 Wire the Switch in Series

To monitor several movable safety guards with a series connection of SI-RF Safety Switch, follow these steps.

1. Connect the safety outputs of the last SI-RF Safety Switch to a safety monitoring unit.
2. Connect the safety inputs of the first SI-RF Safety Switch of the series to + 24 V DC.
3. Connect the safety outputs of the first SI-RF Safety Switch to the safety inputs of the second SI-RF Safety Switch (and second to third, etc).
4. When all the safety guards are closed (all actuators are detected), the last SI-RF Safety Switch of the series connection switches on its safety outputs.
5. If you are using an optional In-Series Diagnostic (ISD) device (SI-RFD series), integrate the diagnostic device between the last SI-RF Safety Switch and the safety monitoring module in the series connection. The status information can then be retrieved from the diagnostic device.

NOTE: Verify the SI-RF Safety Switch and the safety monitoring module are powered from the same power supply or the commons of the separate supplies are the same.

If you are using the optional PNP auxiliary output (SI-RFS series), only the non-safety-related status information of each individual sensor can be obtained.

After the door is closed, the optional reset function requires a manual acknowledgment before the safety output of the sensor is switched on (only that individual sensor, not the series string).

Figure 9. Wiring the switch in series

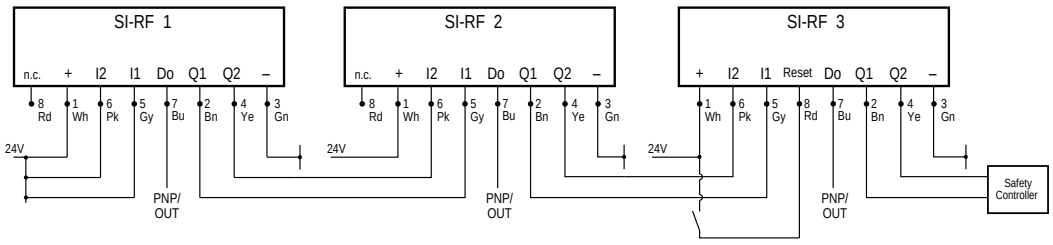

© Banner Engineering Corp. All rights reserved.
www.bannerengineering.com

4.8.6 Wire the Switch in Series Using the Quick Disconnect

Use models **SI-RFS** and **SI-RFD** for this configuration.

When connecting units in series, simplify the wiring using special t-adapters and low-cost unshielded four-wire double-ended cables. A similar configuration is shown except the connections are all made using quick disconnects. The **SSA-EB1PLx-0Dx** E-stops, **SI-RFD** switches, and the SSA-ISD Connect can be combined in a single chain.

1. Connect the female 4-pin M12 cable to the male 4-pin M12 of the series connection t-adapter (**SI-RFA-TS**).
2. If a manual reset model sensor is used, connect the female 8-pin M12 of the Reset T-Adapter (**SI-RFA-TK**) to the male 8-pin M12 connector of the series connection t-adapter. Connect a female 4-pin M12 cable to the male 4-pin M12 QD of the t-adapter for connecting a reset switch or reading the Auxiliary output.
3. Connect the sensor to the male 8-pin M12 connector of the t-adapter.
4. Connect the male 4-pin M12 end of a double-ended cable to the female 4-pin M12 of the t-adapter. Connect the female 4-pin M12 end of the double-ended cable to the next series connection t-adapter (**SI-RFA-TS**).
5. At the end of the line a terminating plug (**SI-RFA-P**) is required to properly truncate the system.
6. The wired end of the 4-pin M12 cable (from step 1) can be wired directly to a Safety Monitoring Module or can be wired through an In-Series Diagnostic (ISD) module then to the Safety Monitoring device.

Verify that the SI-RF Safety Switch and the safety monitoring module are powered from the same power supply or the commons of the separate supplies are the same. Ensure that the voltage level at SI-RF 1 (furthest from the power supply) is above 19.5 V for the system to operate properly.

Figure 10. Wiring the switch in series using the quick disconnect connector

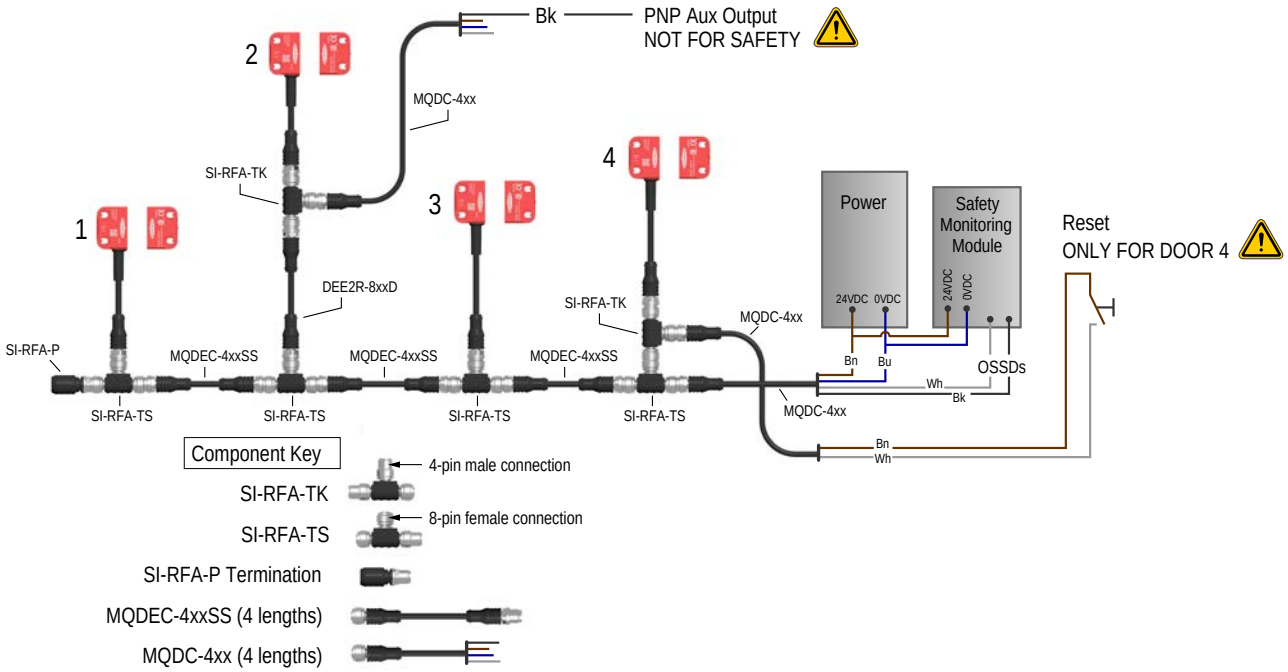

In long chains, or chains with a lot of ISD devices, the voltage at the first device (device closest to terminating plug) must stay above 19.5 V for the chain to operate properly.

For guidance on the maximum total cable length and a maximum number of devices before an additional power supply may be needed, refer to Maximum total cable length for a single power supply. For using ISD information to monitor the individual device voltages, see "In-Series Diagnostic Information" on page 13.

An additional power supply may be required to maintain a minimum of 19.5 V at all devices. There are two options to connect an additional power supply.

© Banner Engineering Corp. All rights reserved.
www.bannerengineering.com

Figure 11. Option 1: Use a SI-RFA-TK Reset Connector in series with ISD Device. If available, set the power supplies for parallel output.

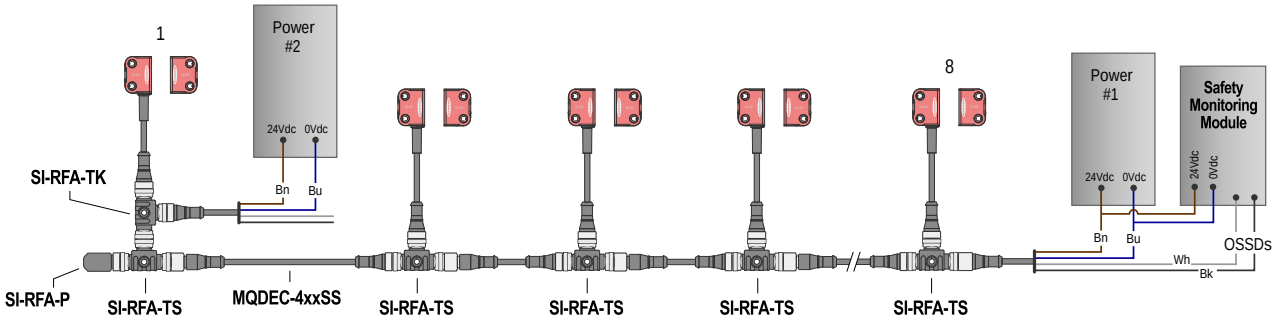

Figure 12. Option 2: Replace the terminator with a power supply. The OSSD1 and OSSD2 wires at power supply #2 must be connected to +24 V DC. If available, set the power supplies for parallel output.



Figure 13. Maximum total cable length for a single power supply

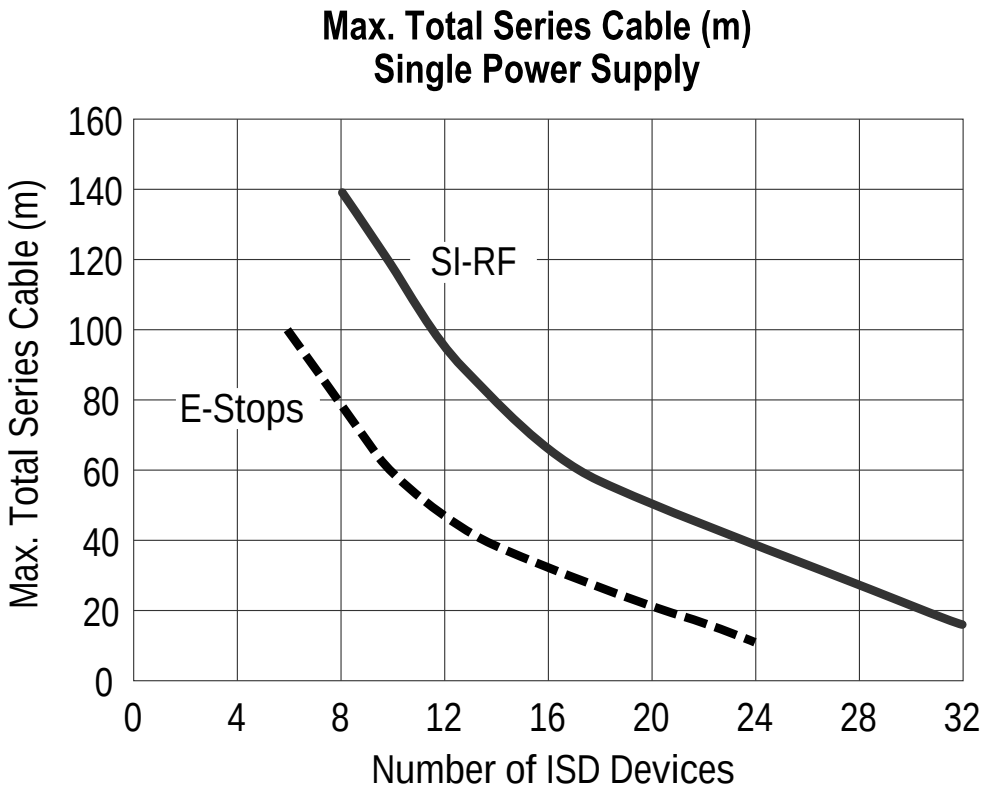

The SI-RFD switches and the ISD Connect have similar current demands. However, when used with a number of lighted ISD emergency stop devices, the current draw of the emergency stop devices governs the cable lengths and when more power is needed. The maximum cable length between devices (including the last unit and the ISD evaluation device) is 30 meters.

© Banner Engineering Corp. All rights reserved.
www.bannerengineering.com

WARNING:

- **Safety devices with OSSDs and without ISD, such as safety light curtains, are not compatible.**
- Failure to follow these instructions could result in serious injury or death.
- Do not use safety devices with OSSDs and without ISD in a series connection of multiple ISD devices.

© Banner Engineering Corp. All rights reserved.
www.bannerengineering.com

Chapter Contents

5.1 Cordsets 21
5.2 Adapters and Other Accessories 23
5.3 Safety Controllers 23
5.4 Universal (Input) Safety Modules 23

Chapter 5 Accessories

5.1 Cordsets

8-pin A-Code Single-Ended M12 Female Cordsets (datasheet p/n 235941)				
Model	**Length**	**Dimensions (mm)**	**Pinout (Female)**	
BC-M12F8-24-1	1 m (3.28 ft)	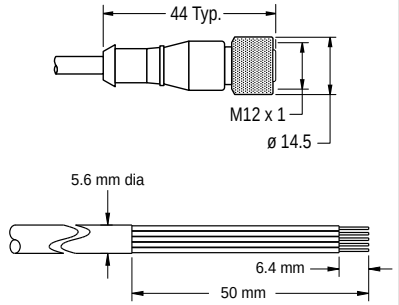	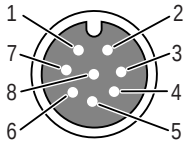	1 = White 2 = Brown 3 = Green 4 = Yellow 5 = Gray 6 = Pink 7 = Blue 8 = Red
BC-M12F8-24-2	2 m (6.56 ft)			
BC-M12F8-24-5	5 m (16.4 ft)			
BC-M12F8-24-10	10 m (30.81 ft)			

5-Pin Single-Ended M12 Female Cordsets				
Model	**Length**	**Style**	**Dimensions**	**Pinout (Female)**
MQDC1-501.5	0.5 m (1.5 ft)	Straight	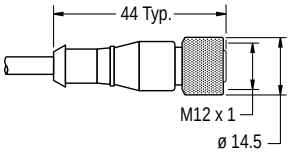	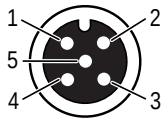 1 = Brown 2 = White 3 = Blue 4 = Black 5 = Gray
MQDC1-503	0.9 m (2.9 ft)			
MQDC1-506	2 m (6.5 ft)			
MQDC1-515	5 m (16.4 ft)			
MQDC1-530	9 m (29.5 ft)			
MQDC1-560	18 m (59 ft)			
MQDC1-5100	31 m (101.7 ft)			
MQDC1-506RA	2 m (6.5 ft)	Right-Angle	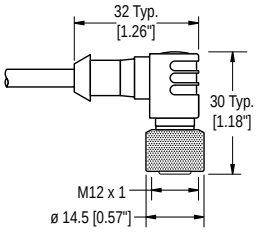	
MQDC1-515RA	5 m (16.4 ft)			
MQDC1-530RA	9 m (29.5 ft)			
MQDC1-560RA	19 m (62.3 ft)			

© Banner Engineering Corp. All rights reserved.
www.bannerengineering.com

4-Pin Single-Ended M12 Female Cordsets					
Model	**Length**	**Style**	**Dimensions**	**Pinout (Female)**	
MQDC-406	2 m (6.56 ft)	Straight	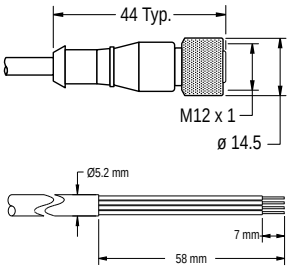	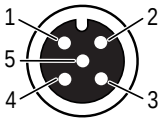	1 = Brown 2 = White 3 = Blue 4 = Black 5 = Not used
MQDC-415	5 m (16.4 ft)				
MQDC-430	9 m (29.5 ft)				
MQDC-450	15 m (49.2 ft)				
MQDC-406RA	2 m (6.56 ft)	Right-Angle	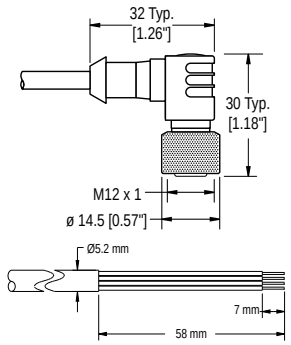	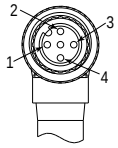	
MQDC-415RA	5 m (16.4 ft)				
MQDC-430RA	9 m (29.5 ft)				
MQDC-450RA	15 m (49.2 ft)				

4-Pin Double-Ended M12 Female to M12 Male Cordsets				
Model	**Length**	**Style**	**Dimensions**	**Pinout**
MQDEC-401SS	0.31 m (1 ft)	Male Straight / Female Straight	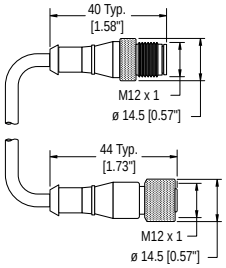	Female 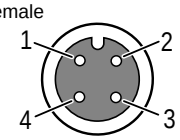 Male 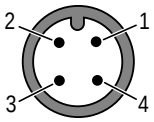 1 = Brown 2 = White 3 = Blue 4 = Black
MQDEC-403SS	0.91 m (2.99 ft)			
MQDEC-406SS	1.83 m (6 ft)			
MQDEC-412SS	3.66 m (12 ft)			
MQDEC-415SS	4.58 m (15 ft)			
MQDEC-420SS	6.10 m (20 ft)			
MQDEC-430SS	9.14 m (30.2 ft)			
MQDEC-450SS	15.2 m (49.9 ft)			
MQDEC-403RS	0.91 m (2.99 ft)	Male Right-Angle / Female Straight	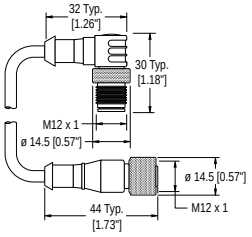	
MQDEC-406RS	1.83 m (6 ft)			
MQDEC-412RS	3.66 m (12 ft)			
MQDEC-420RS	6.10 m (20 ft)			
MQDEC-430RS	9.14 m (30.2 ft)			
MQDEC-450RS	15.2 m (49.9 ft)			
MQDEC-403RR	0.9 m (2.9 ft)	Male Right-Angle / Female Right-Angle	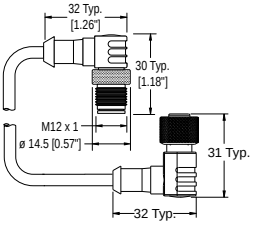	
MQDEC-406RR	1.8 m (5.9 ft)			
MQDEC-412RR	3.6 m (11.8 ft)			
MQDEC-420RR	6.1 m (20 ft)			

© Banner Engineering Corp. All rights reserved.
www.bannerengineering.com

<table>
<tr><th colspan="5">8-Pin Double-Ended M12 Female to M12 Male Cordsets</th></tr>
<tr><th>Model (8-pin/8-pin)</th><th>Length</th><th>Style</th><th>Dimensions</th><th>Pinout</th></tr>
<tr><td>DEE2R-81D</td><td>0.3 m (1 ft)</td><td rowspan="8">Female Straight/ Male Straight</td><td rowspan="8">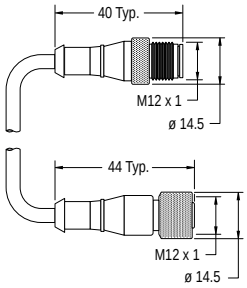
</td><td rowspan="7">Female
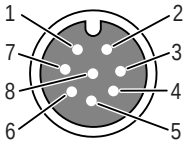

Male
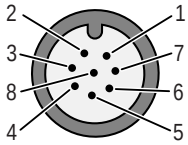
</td></tr>
<tr><td>DEE2R-83D</td><td>0.91 m (3 ft)</td></tr>
<tr><td>DEE2R-88D</td><td>2.44 m (8 ft)</td></tr>
<tr><td>DEE2R-815D</td><td>4.57 m (15 ft)</td></tr>
<tr><td>DEE2R-825D</td><td>7.62 m (25 ft)</td></tr>
<tr><td>DEE2R-850D</td><td>15.24 m (50 ft)</td></tr>
<tr><td>DEE2R-875D</td><td>22.86 m (75 ft)</td></tr>
<tr><td>DEE2R-8100D</td><td>30.48 m (100 ft)</td><td>1 = Brown
2 = Orange/Black
3 = Orange
4 = White</td><td>5 = Black
6 = Blue
7 = Green/Yellow
8 = Violet</td></tr>
</table>

5.2 Adapters and Other Accessories

Model	Description
SI-RFA-TS	SI-RF T-adapter for series connection, 4 pin to 8 pin to 4 pin, IP68 rated
SI-RFA-TK	SI-RF T-adapter for connection of the reset button, 8 pin to 4 pin to 8 pin, IP68 rated
SI-RFA-P	SI-RF Termination plug M12, IP68 rated
SI-RFA-DM1	SI-RF Diagnostic Module with 8 digital outputs and 1 diagnostic circuit Interfaces: IO-Link, USB 2.0
SI-RDA-DM2	SI-RF Diagnostic Module with 1 diagnostic circuit, IP69 rated Interfaces: IO-Link
CSB-M1250M1250-T	Splitter that can be used to add power between ISD devices

5.3 Safety Controllers

Safety Controllers provide a fully configurable, software-based safety logic solution for monitoring safety and non-safety devices.

For additional models and XS26 expansion modules, see instruction manual p/n 174868.

Table 2. Safety controller models

Non-Expandable Models	Expandable Models	Description
SC26-2	XS26-2	26 convertible I/O and 2 redundant solid-state safety outputs
SC26-2d	XS26-2d	26 convertible I/O and 2 redundant solid-state safety outputs with display
SC26-2e	XS26-2e	26 convertible I/O and 2 redundant solid-state safety outputs with Ethernet
SC26-2de	XS26-2de	26 convertible I/O and 2 redundant solid-state safety outputs with display and Ethernet
SC10-2roe		10 inputs, 2 redundant relay safety outputs (3 contacts each) (ISD and Ethernet compatible)
	XS26-ISDd	26 inputs, 2 redundant solid-state safety outputs with display, Ethernet, and 8 ISD channels

5.4 Universal (Input) Safety Modules

UM-FA-xA Safety Modules provide forced-guided, mechanically-linked relay (safety) outputs for the SI-RF Safety Switch system when an external manual reset (latch) is desired or external device monitoring is required in the application. See datasheet p/n 141249 for more information.

© Banner Engineering Corp. All rights reserved.
www.bannerengineering.com

Model	Description
UM-FA-9A	3 normally open (N.O.) redundant-output 6 amp contacts
UM-FA-11A	2 normally open (N.O.) redundant-output 6 amp contacts, plus 1 normally closed (N.C.) auxiliary contact

© Banner Engineering Corp. All rights reserved.

Chapter Contents

6.1 Maintenance and Service 25
6.2 Status Indicators 25
6.3 Information Available via ISD 26
6.4 Contact Us 28
6.5 Banner Engineering Corp Limited Warranty 28

Chapter 6 Product Support and Maintenance

6.1 Maintenance and Service

Remove all contamination by metal-based materials to avoid reducing the switch distance. Do not use alcoholic cleaning agents.

The SI-RF Safety Switch is maintenance-free.

For long-term and trouble-free operation, please periodically check the following points:

- solid fit of all components
- reliable switching function
- if damage occurs, please exchange the relevant components

Liability disclaimer— By breach of the given instructions (concerning the intended use, the safety instructions, the installation and connection through qualified personnel and the testing of the safety function) manufacturer's liability expires.

6.2 Status Indicators

Status Indicators	Information for	Color	Status	Meaning
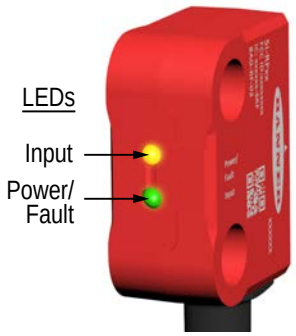	Operating status	Green	On	Sensor OK
			Flashing (BC1)	Reset expected (only with reset input)
			Flashing (BC2)	Input function not fulfilled or the actuator is not present *
	Actuator	Amber	On	Actuator in range, correct code
			Flashing (BC5)	Actuator at detection limit
			Flashing (BC2)	Actuator in range, wrong code *
			Flashing (BC1)	Actuator not taught-in
			Off	Actuator out of range
	Teaching	Green; amber	Flashing (BC6 for 1.5 s)	Actuator code successfully temporary stored
			Flashing (BC6 for 3 s)	Actuator code successfully stored
	Fault	Red	On	Failure in voltage monitoring
			Flashing (BC2)	OSSD fault detected (switch off after specified time)
			Flashing (BC4)	Internal fault (operation possible again after power reset)

* If an actuator with the wrong code is in range, both the green and amber indicators flash BC2.

© Banner Engineering Corp. All rights reserved.
www.bannerengineering.com

Figure 14. Flash code sequence

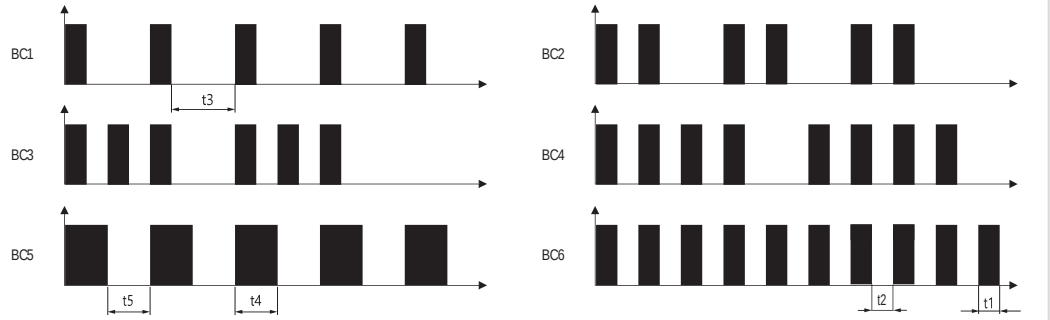

T1 = 250 ms
T2 = 250 ms
T3 = 750 ms
T4 = 500 ms
T5 = 500 ms

6.3 Information Available via ISD

The following information can be obtained from the ISD chain and a diagnostic unit or ISD-enabled Safety Controller.

Cyclic data about the chain that can be obtained from an ISD-enabled Banner Safety Controller:

Information	Type	Data Size	Steps to Resolve
ISD chain count does not match configuration (XS26-ISD FID 5 or later (only when not using Auto Detect mode) and SC10 FID 2 or later.)	Controller Alert	1 bit	Check the number of physical units against the number configured in the chain
ISD chain order does not match configuration (XS26-ISD FID 5 or later (only when not using Auto Detect mode) and SC10 FID 2 or later.)	Controller Alert	1 bit	Check the order of the physical units against the configured order. Note the location of the terminator plug and the controller.
ISD data update pending (no data or buffered data)	Controller Alert	1 bit	Caused by non-ISD devices in chain or a buffering situation If the data is not present from power up (never present): • Verify that all devices in ISD Chain are ISD enabled devices If data was present but then lost: • Verify that the chain has not been broken • Data could be disrupted and will return in a few seconds
Invalid (non-ISD) device in ISD chain	Controller Alert	1 bit	Incorrect data types are being received • Verify that all devices in the chain are Banner ISD devices
ISD device detected but not configured (*reserved* in XS26-ISD)	Informative	1 bit	• Verify the ISD chain is wired to the correct terminals • Verify that the correct input device type (ISD) was selected for this input in the configuration.
ISD chain terminator plug missing	ISD Status	1 bit	• Verify that the terminator plug has not come loose • Verify that the chain has not been broken (loose connections)
SI-RF high or unique sensor not taught an actuator	ISD Fault	1 bit	An SI-RF switch (-UP8 or -HP8) have not been taught • Configure the unit to its actuator per instructions in Banner datasheet p/n 208885
Wrong actuator presented to a high or unique sensor	ISD Fault	1 bit	An SI-RF switch (-UP8 or -HP8) is seeing an actuator but not the one to which it was configured. • Check for tampering (wrong actuator being used) • Teach High coded sensor (-HP8) the new actuator
Internal error on an ISD device in the chain	ISD Fault	1 bit	• Verify which device has the error, cycle power to the system • If the error persists, replace the device

Continued on page 27

© Banner Engineering Corp. All rights reserved.
www.bannerengineering.com

Continued from page 26

Information	Type	Data Size	Steps to Resolve
ISD Output fault detected, output turn off counter started	ISD Fault	1 bit	ISD device output will turn off in 20 minutes • Verify which device has the error, check wiring for shorts • Cycle power, if issue persists, replace the device
Change in ISD chain detected (only in XS26-ISD FID 5 or later)	ISD Status	1 bit	If AutoDetect ISD is configured and an ISD chain length or order has changed, this flag will be set and must be recognized by the PLC.
ISD Count Change from Baseline Detected	ISD Status	1 bit	ISD device count has changed from the baseline count, verify the chain device count matches machine configuration.
ISD Chain output signal switching device (OSSD) status	ISD Status	1 bit	

Table 3. Individual Unit Data—Flags

Short Name	Data Format	Meaning of data
Actuator Detected	1/0	The SI-RF sensor detects an actuator **NOTE:** It does not have to be the taught actuator.
Wrong Actuator	1/0	SI-RF sensor detects an actuator with a "received code" that does not match the "expected code". For code values, see "Individual Unit Data—Values" on page 27.
Sensor not paired	1/0	High or Unique sensor that has not been taught an actuator
Output 1	1/0	Output 1 is On
Output 2	1/0	Output 2 is On
Marginal Range	1/0	An actuator is detected but is staying at the extreme end of the detection range (13 mm to 15 mm away from the sensor)
Input 1	1/0	ISD device input 1 is On
Input 2	1/0	ISD device input 2 is On
Local Reset Expected	1/0	An ISD device with the latch feature requires a reset
Operating Voltage Warning	1/0	Voltage to the ISD device is at the limit of specifications
ISD Data Error	1/0	ISD error bit, corrupted data was received from the SI-RF ISD chain of switches
Safety Input Fault	1/0	The system detected a fault on a safety input of an ISD device, power cycle required
Output Error	1/0	ISD Device detects an output short to voltage or ground. This starts the "output switch-off timer" counter. For code values, see "Individual Unit Data—Values" on page 27.
Operating Voltage Error	1/0	Voltage to the ISD Device is above (over 30 V DC) or below (less than 19.2 V DC) limit of range
Power Cycle Required	1/0	ISD Device detects a fault, a power cycled required

Table 4. Individual Unit Data—Configuration

Short Name	Data Format	Meaning of data
Local Reset Unit	1/0	The ISD Device includes the latch feature
High Coding Level	1/0	The SI-RF sensor coding level is High/Unique
Cascadable	1/0	The ISD Device includes the cascade feature **NOTE:** This will always be true for SI-RF models with ISD.
Fault Tolerant Outputs	1/0	Indicates that the ISD Device includes the fault tolerant output feature where output faults cause a 20 minute off delay/fault delay **NOTE:** This will always be true for SI-RF models with ISD.

Table 5. Individual Unit Data—Values

Short Name	Data Format	Meaning of data
Device		Type of ISD Device

Continued on page 28

© Banner Engineering Corp. All rights reserved.
www.bannerengineering.com

Continued from page 27

Short Name	Data Format	Meaning of data
Expected Code		For SI-RF sensors with high or unique coding, displays the actuator code taught to the sensor. Low coded units will display 1234.
Received Code		Displays the actuator code detected by the SI-RF sensor
Teach-ins Remaining	number	For SI-RF sensors with high and unique coding, displays the remaining number of teaches available. Low and already taught unique units display (0).
Number of voltage errors	number	The number of voltage warnings received in the last 60 seconds (voltage is checked every second), a number between 0 and 60
Number of operations	number	The number of on/off cycles the sensor has experienced
Output Switch-off time	number	The delay counter for certain output errors (0 = inactive, 20 to 1 = remaining minutes to device lockout state)
Range Warning Count	number	For SI-RF Sensors, a count of the range warnings received in the last 60 minutes. The counter increments when at least half of the RFID read attempts in a minute had a range warning.
Supply Voltage	number	The actual input voltage detected by the ISD sensor
Internal Temperature	number	The internal temperature of the ISD Sensor (°C)
Actuator Distance	number	The distance the actuator is from the SI-RF sensor. This value is displayed as a percentage of the range of the SI-RF sensor.
Expected Company Name		Banner's company code is 6
Received Company Name		Banner's company code is 6

6.4 Contact Us

Banner Engineering Corp. | 9714 Tenth Avenue North | Plymouth, MN 55441, USA | Phone: + 1 888 373 6767

For worldwide locations and local representatives, visit www.bannerengineering.com.

6.5 Banner Engineering Corp Limited Warranty

Banner Engineering Corp. warrants its products to be free from defects in material and workmanship for one year following the date of shipment. Banner Engineering Corp. will repair or replace, free of charge, any product of its manufacture which, at the time it is returned to the factory, is found to have been defective during the warranty period. This warranty does not cover damage or liability for misuse, abuse, or the improper application or installation of the Banner product.

THIS LIMITED WARRANTY IS EXCLUSIVE AND IN LIEU OF ALL OTHER WARRANTIES WHETHER EXPRESS OR IMPLIED (INCLUDING, WITHOUT LIMITATION, ANY WARRANTY OF MERCHANTABILITY OR FITNESS FOR A PARTICULAR PURPOSE), AND WHETHER ARISING UNDER COURSE OF PERFORMANCE, COURSE OF DEALING OR TRADE USAGE.

This Warranty is exclusive and limited to repair or, at the discretion of Banner Engineering Corp., replacement. **IN NO EVENT SHALL BANNER ENGINEERING CORP. BE LIABLE TO BUYER OR ANY OTHER PERSON OR ENTITY FOR ANY EXTRA COSTS, EXPENSES, LOSSES, LOSS OF PROFITS, OR ANY INCIDENTAL, CONSEQUENTIAL OR SPECIAL DAMAGES RESULTING FROM ANY PRODUCT DEFECT OR FROM THE USE OR INABILITY TO USE THE PRODUCT, WHETHER ARISING IN CONTRACT OR WARRANTY, STATUTE, TORT, STRICT LIABILITY, NEGLIGENCE, OR OTHERWISE.**

Banner Engineering Corp. reserves the right to change, modify or improve the design of the product without assuming any obligations or liabilities relating to any product previously manufactured by Banner Engineering Corp. Any misuse, abuse, or improper application or installation of this product or use of the product for personal protection applications when the product is identified as not intended for such purposes will void the product warranty. Any modifications to this product without prior express approval by Banner Engineering Corp will void the product warranties. All specifications published in this document are subject to change; Banner reserves the right to modify product specifications or update documentation at any time. Specifications and product information in English supersede that which is provided in any other language. For the most recent version of any documentation, refer to: www.bannerengineering.com.

For patent information, see www.bannerengineering.com/patents.

© Banner Engineering Corp. All rights reserved.

LinkedIn

X

Facebook

Instagram



© 2026. All rights reserved.
www.bannerengineering.com