# UWG18-xx 18 mm Wave Guide Accessory

## Datasheet

*Ultrasonic Wave Guide for Sensors with 18 mm Threaded Barrel*



- Attaches to the threaded barrel of Banner S18U or QS18U ultrasonic sensors
- Focuses the ultrasonic sensing beam to access and detect the depth of small openings
- Choice of two sizes: 5.0 mm or 6.4 mm barrel inside diameter
- Excellent for sensing small objects or for detecting edges on sheet metal
- Construction: Acetal

## Models

| Model | Description |
|---|---|
| **UWG18-5.0** | 5.0 mm inside diameter barrel |
| **UWG18-6.4** | 6.4 mm inside diameter barrel |

## Installation

A slender threaded plastic nut is included with the accessory. For sensors that will be barrel-mounted, use this nut for mounting the sensor, then mount the wave guide as described.

**NOTE:** For high-vibration applications, application of a small amount of thread-locking material is recommended.

1. Thread the wave guide accessory onto the 18 mm barrel of the sensor until the wave guide is snug (the sensor face is in contact with the gasket).
2. Continue to tighten wave guide until the bevel faces downward. This helps prevent the collection of debris inside the opening.

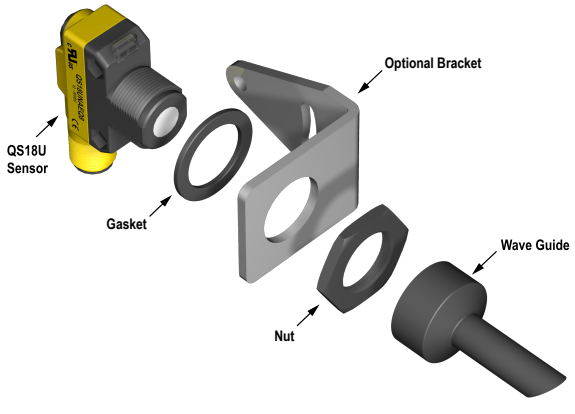


## Dimensions

| | Model | Inside Diameter (“A”) | Outside Diameter (“B”) |
|---|---|---|---|
| 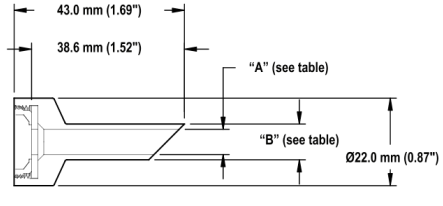 | **UWG18-5.0** | 5.0 mm (0.20 in) | 7.0 mm (0.28 in) |
| | **UWG18-6.4** | 6.4 mm (0.25 in) | 9.0 mm (0.35 in) |




© Banner Engineering Corp.


ПРОМЭЛЕКТРОНИКА/ sales@prom-elec.com

# Typical Beam Patterns with Wave Guide Attached

*S18U Series Sensors—5.0 mm Inside Barrel*

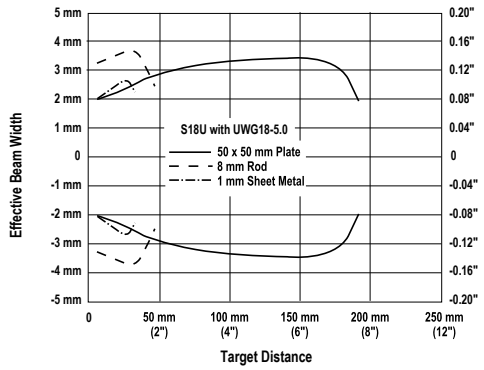


*QS18U Series Sensors—5.0 mm Inside Barrel*

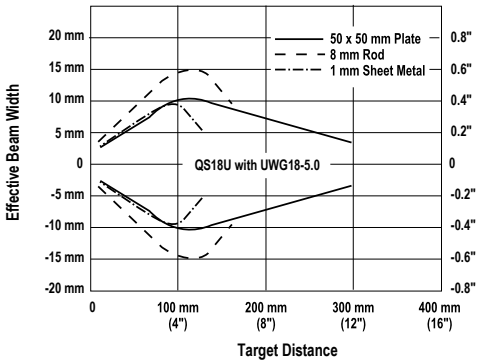


*S18U Series Sensors—6.4 mm Inside Barrel*

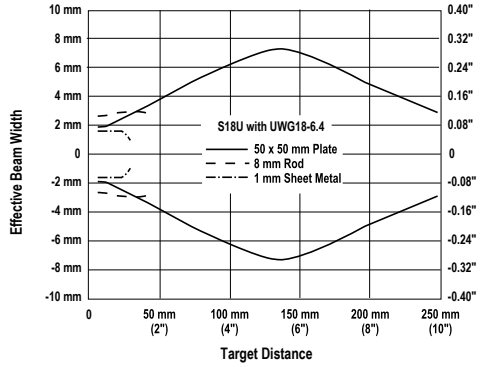


*QS18U Series Sensors—6.4 mm Inside Barrel*

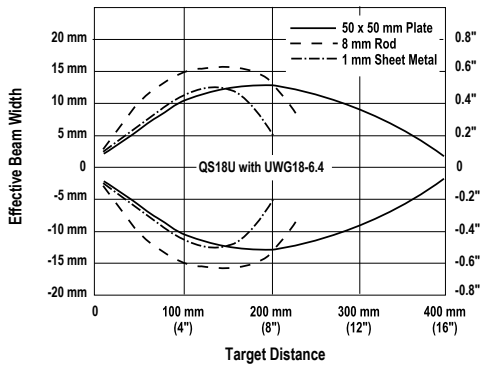


# Banner Engineering Corp. Limited Warranty

Banner Engineering Corp. warrants its products to be free from defects in material and workmanship for one year following the date of shipment. Banner Engineering Corp. will repair or replace, free of charge, any product of its manufacture which, at the time it is returned to the factory, is found to have been defective during the warranty period. This warranty does not cover damage or liability for misuse, abuse, or the improper application or installation of the Banner product.

**THIS LIMITED WARRANTY IS EXCLUSIVE AND IN LIEU OF ALL OTHER WARRANTIES WHETHER EXPRESS OR IMPLIED (INCLUDING, WITHOUT LIMITATION, ANY WARRANTY OF MERCHANTABILITY OR FITNESS FOR A PARTICULAR PURPOSE), AND WHETHER ARISING UNDER COURSE OF PERFORMANCE, COURSE OF DEALING OR TRADE USAGE.**

This Warranty is exclusive and limited to repair or, at the discretion of Banner Engineering Corp., replacement. **IN NO EVENT SHALL BANNER ENGINEERING CORP. BE LIABLE TO BUYER OR ANY OTHER PERSON OR ENTITY FOR ANY EXTRA COSTS, EXPENSES, LOSSES, LOSS OF PROFITS, OR ANY INCIDENTAL, CONSEQUENTIAL OR SPECIAL DAMAGES RESULTING FROM ANY PRODUCT DEFECT OR FROM THE USE OR INABILITY TO USE THE PRODUCT, WHETHER ARISING IN CONTRACT OR WARRANTY, STATUTE, TORT, STRICT LIABILITY, NEGLIGENCE, OR OTHERWISE.**

Banner Engineering Corp. reserves the right to change, modify or improve the design of the product without assuming any obligations or liabilities relating to any product previously manufactured by Banner Engineering Corp. Any misuse, abuse, or improper application or installation of this product or use of the product for personal protection applications when the product is identified as not intended for such purposes will void the product warranty. Any modifications to this product without prior express approval by Banner Engineering Corp will void the product warranties. All specifications published in this document are subject to change; Banner reserves the right to modify product specifications or update documentation at any time. Specifications and product information in English supersede that which is provided in any other language. For the most recent version of any documentation, refer to: www.bannerengineering.com.

For patent information, see www.bannerengineering.com/patents.

Document title: UWG18-xx 18 mm Wave Guide Accessory Datasheet
Part number: 130153
Revision: B
Original Instructions
© Banner Engineering Corp. All rights reserved.

130153


© Banner Engineering Corp. All rights reserved.