MODEL NO.	"HL"	"L"	"D"	P/N
IAI.53SMTAM600	35.1 [1.38]	914.4 [36]	2.3 [.09]	21568
IA.754SMTA	35.1 [1.38]	1219.2 [48]	1.17 [.046]	21494
IAI.58SMTA	35.1 [1.38]	2438.4 [96]	2.3 [.09]	21479
IAI.52SMTA	35.1 [1.38]	609.6 [24]	2.3 [.09]	21423
IAI.55SMTA	35.1 [1.38]	1524 [60]	2.3 [.09]	21424
IAI.56SMTA	35.1 [1.38]	1828.8 [72]	2.3 [.09]	21427
IA.753SMTA	35.1 [1.38]	914.4 [36]	1.17 [.046]	21158
IAI3SMTA	35.1 [1.38]	914.4 [36]	1.57 [.062]	21196
IAI5SMTA	35.1 [1.38]	1524 [60]	1.57 [.062]	21173
IAI.54SMTA	35.1 [1.38]	1219.2 [48]	2.3 [.09]	21223
IAI.57SMTA	35.1 [1.38]	2133.6 [84]	2.3 [.09]	21035
IAI.53SMTA	35.1 [1.38]	914.4 [36]	2.3 [.09]	21056

MODEL NO.	"HL"	"L"	"D"	P/N
IAI3SMTAM2.75	69.9 [2.75]	914.4 [36]	1.57 [.062]	21756
IAI.62SMTA	35.1 [1.38]	609.6 [24]	2.5 [.10]	21752
IAI.53SMTAM2	50.8 [2.00]	914.4 [36]	2.3 [.09]	21662
IAI.520SMTA	35.1 [1.38]	6096 [240]	2.3 [.09]	21636
IAI.53SMTAM3	76.2 [3.00]	914.4 [36]	2.3 [.09]	21573
IAI.39SMTAMCT	35.1 [1.38]	119.38 ± 2.54 [4.7 ±.1]	1.57 [.062]	21572

NOTES:

1. 'M600' SUFFIX INDICATES THAT FIBERS POTTED ON ANGLED END WITH EPOXY THAT OPERATES IN MAX. TEMPERATURE OF 600°F.

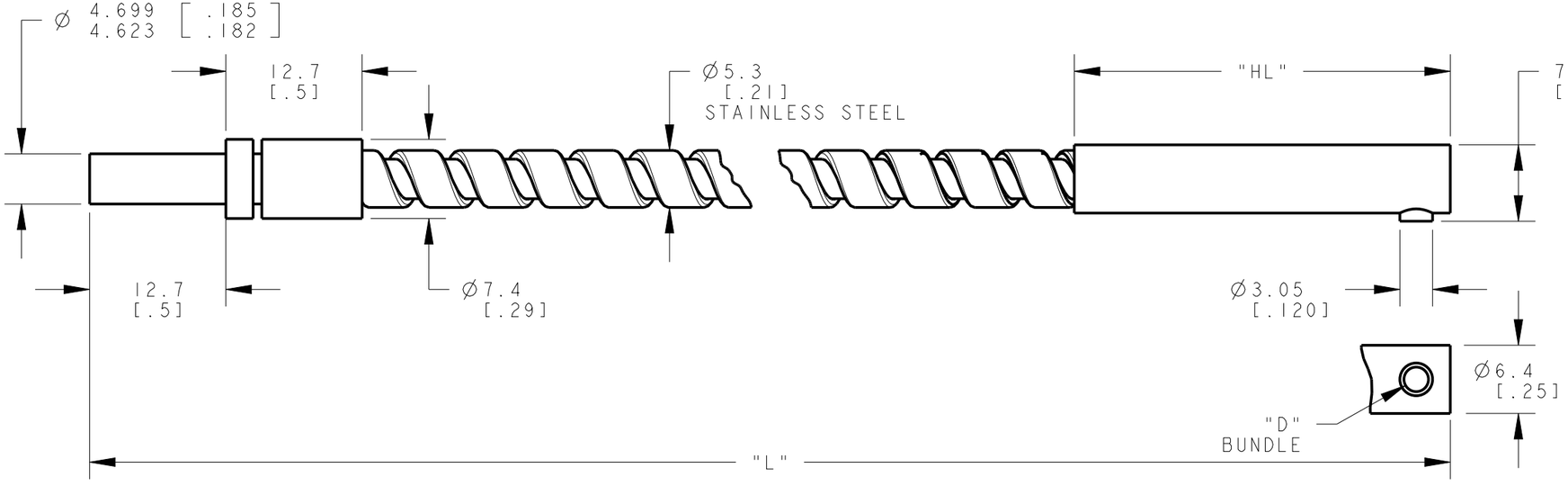

NOTES:
1. ALL DIMENSIONS ARE MILLIMETERS [INCHES] UNLESS OTHERWISE NOTED.
2. REFER TO "www.bannerengineering.com" FOR ADDITIONAL DATA AND SPECIFICATIONS.

This drawing is the property of BANNER ENGINEERING CORP. Any use or reproduction, in any form, without prior written permission of Banner is prohibited.
© Banner Engineering Corp.

THIRD ANGLE PROJECTION

BANNER ENGINEERING CORP.
www.bannerengineering.com

TITLE

IAI.5 SERIES SS TIGHT ANGLE

SIZE	DRAWING NO.	REV.
B	161915	A

SCALE 2:1 | SHEET 1 OF 2

CREO

ПРОМЭЛЕКТРОНИКА/ sales@prom-elec.com

MODEL NO.	"HL"	"L"	"D"	P/N
IAII5SMTA	35.1 [1.38]	4572 [180]	1.57 [.062]	24482
IAI.5I5SMTA	35.1 [1.38]	4572 [180]	2.3 [.09]	23533
IAI.5.5SMTA	35.1 [1.38]	152.4 [6]	2.3 [.09]	23924
IAI9SMTA	35.1 [1.38]	2743.2 [108]	1.57 [.062]	23946
IAI.5I.3SMTA	35.1 [1.38]	381 [15]	2.3 [.09]	23954
IAI.53.33SMTAM600	35.1 [1.38]	1016 [40]	2.3 [.09]	00000
IAI.5I0.2SMTAM600	35.1 [1.38]	3098.8 [122]	2.3 [.09]	00000
IAI.5I0SMTA	35.1 [1.38]	3048 [120]	2.3 [.09]	24002
IAI.5I.6SMTA	35.1 [1.38]	482.6 [19]	2.3 [.09]	24209
IAII0SMTA	35.1 [1.38]	3048 [120]	1.57 [.062]	24291
IA.75ISMTA	35.1 [1.38]	304.8 [12]	1.17 [.046]	24308
IAI.5I.5SMTA	35.1 [1.38]	457.2 [18]	2.3 [.09]	00000
IA.443SMTA	35.1 [1.38]	914.4 [36]	0.69 [.027]	00000
IAI.5.6SMTA	35.1 [1.38]	177.8 [7]	2.3 [.09]	24440
IAI.59SMTA	35.1 [1.38]	2743.2 [108]	2.3 [.09]	24605
IAI.83SMTA	35.1 [1.38]	254 [10]	1.57 [.062]	68574
IA.753SMTAM2.5	63.5 [2.50]	914.4 [36]	1.17 [.046]	00000
IAI.5.7SMTA	35.1 [1.38]	203.2 [8]	2.3 [.09]	00000
IA.75I.3SMTAM600	35.1 [1.38]	381 [15]	1.17 [.046]	70242
IA.756SMTA	35.1 [1.38]	1828.8 [72]	1.17 [.046]	70744
IAI.5.8SMTA	35.1 [1.38]	228.6 [9]	2.3 [.09]	70784
IA.56SMTA	35.1 [1.38]	1828.8 [72]	0.81 [.032]	71646
IAI.56SMTAM600	35.1 [1.38]	1828.8 [72]	2.3 [.09]	00000
IAI.7SMTA	35.1 [1.38]	203.2 [8]	1.57 [.062]	74026
IAI.5ISMTA	35.1 [1.38]	304.8 [12]	2.3 [.09]	22691
IAI.8SMTA	35.1 [1.38]	228.6 [9]	1.57 [.062]	74208
IA.752SMTA	35.1 [1.38]	609.6 [24]	1.17 [.046]	22524
IAIISMTA	35.1 [1.38]	304.8 [12]	1.57 [.062]	22409
IAII.5SMTA	35.1 [1.38]	457.2 [18]	1.57 [.062]	22408
IAII2SMTA	35.1 [1.38]	3657.6 [144]	1.57 [.062]	22183

MODEL NO.	"HL"	"L"	"D"	P/N
IAI.522SMTA	35.1 [1.38]	6705.6 [264]	2.3 [.09]	93426
IAI6SMTA	35.1 [1.38]	1828.8 [72]	1.57 [.062]	21828
IAI2.5SMTA	35.1 [1.38]	762 [30]	1.57 [.062]	17415
IA.75I.5SMTA	35.1 [1.38]	457.2 [18]	1.17 [.046]	22714
IAI4SMTA	35.1 [1.38]	1219.2 [48]	1.57 [.062]	68591
IAI.53SMTAM4.38	111.3 [4.38]	914.4 [36]	2.3 [.09]	22835
IAI.5I2SMTA	35.1 [1.38]	3657.6 [144]	2.3 [.09]	22840
IAI3SMTAM600	35.1 [1.38]	914.4 [36]	1.57 [.062]	22984
IA.53SMTA	35.1 [1.38]	914.4 [36]	0.81 [.032]	23420
IAI.530SMTA	35.1 [1.38]	9144 [360]	2.3 [.09]	23023
IAI.5I.7SMTA	35.1 [1.38]	508 [20]	2.3 [.09]	23079
IAI.5I7SMTA	35.1 [1.38]	5181.6 [204]	2.3 [.09]	23103
IAII.2SMTA	35.1 [1.38]	355.6 [14]	1.57 [.062]	23235
IAII.9SMTA	35.1 [1.38]	584.2 [23]	1.57 [.062]	23236
IAI3SMTAM2	50.8 [2.00]	914.4 [36]	1.57 [.062]	23258

NOTES:

1. 'M600' SUFFIX INDICATES THAT FIBERS POTTED ON ANGLED END WITH EPOXY THAT OPERATES IN MAX. TEMPERATURE OF 600°F.

NOTES:
1. ALL DIMENSIONS ARE MILLIMETERS [INCHES] UNLESS OTHERWISE NOTED.
2. REFER TO "www.bannerengineering.com" FOR ADDITIONAL DATA AND SPECIFICATIONS.

This drawing is the property of BANNER ENGINEERING CORP. Any use or reproduction, in any form, without prior written permission of Banner is prohibited.
© Banner Engineering Corp.

THIRD ANGLE PROJECTION

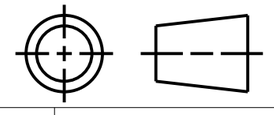

BANNER ENGINEERING CORP.
www.bannerengineering.com

TITLE

IAI.5 SERIES SS TIGHT ANGLE

SIZE	DRAWING NO.	REV.
B	161915	A

SCALE	SHEET
2:1	2 OF 2

CREO