SI-LS83 and LS100 Style Safety Interlock Switch Product Manual

Original Instructions
p/n: 59622 Rev. J
21-Jul-25
© Banner Engineering Corp. All rights reserved. www.bannerengineering.com

ПРОМЭЛЕКТРОНИКА/ sales@prom-elec.com

Contents

Chapter 1 Features 3
Models 3
Important Information Regarding the Use of Safety Switches 4
U.S. Regulations Applicable to Use of Banner Safety Switches 5
U.S. Standards Applicable to Use of Banner Safety Switches 5
Applicable European and International Standards 5
Overview 5

Chapter 2 Installation Instructions 7
Mechanical Installation 7
Electrical Installation 7
Access to the Wiring Chamber 8
Connection to a Machine 8
Periodic Checks 8

Chapter 3 Specifications 10
Dimensions 11

Chapter 4 Accessories 12
Cable Glands 12
Conduit Adapters 12
Replacement Actuators 13

Chapter 5 Product Support and Maintenance 14
Repairs 14
Contact Us 14
Banner Engineering Corp Limited Warranty 14
EU/UK Declaration of Conformity (DoC) 15

© Banner Engineering Corp. All rights reserved. www.bannerengineering.com

Chapter Contents

Models 3
Important Information Regarding the Use of Safety Switches 4
Overview 5

Chapter 1 Features

SI-LS83 and SI-LS100 Series Limit Switch Style – 83 mm and 100 mm



- Positive opening safety contacts (IEC 60947-5-1) (not dependent on springs)
- Limit switch design (EN 50047)
- Mechanically-coded actuators use two independent operating elements to minimize intentional tampering or defeat
- Rotating head allows actuator engagement from four sides or four top positions; no tools are required to rotate head
- Low-profile design for limited space requirements; only 30.5 mm (1.3 inch) depth
- Tough, glass-reinforced thermoplastic housing; metal actuator
- Choice of two in-line actuators or a flexible actuator
- Insulated device (IEC 60947-5-1)

Models

Kit Model[1]	Actuator Type	Interlock Body	Contact Configuration (Actuator Engaged)	Contact Configuration (Actuator Removed)	Switching Diagrams
SI-LS100SF	SI-QS-SSA-2 Straight Rigid In-Line	SI-LS100F	Two N.C. and One N.O. Contact		
SI-LS100SRAF	SI-QS-SSA-3 Right-angle In-Line				
SI-LS100MRFF (Direct replacement for models SI-LS100MRHF and SI-LS100MRVF)	SI-QS-SSU Flexible In-Line				
SI-LS83SD	SI-QS-SSA-2 Straight Rigid In-Line	SI-LS83D	One N.C. and One N.O. Contact		
SI-LS83SRAD	SI-QS-SSA-3 Right-angle In-Line				
SI-LS83MRFD (Direct replacement for models SI-LS83MRHD and SI-LS83MRVD)	SI-QS-SSU Flexible In-Line				

Continued on page 4

[1] A kit contains an interlock and actuator. Individual interlock bodies or actuators are for replacement purposes only.

© Banner Engineering Corp. All rights reserved.
www.bannerengineering.com

Continued from page 3

Kit Model	Actuator Type	Interlock Body	Contact Configuration (Actuator Engaged)	Contact Configuration (Actuator Removed)	Switching Diagrams
SI-LS83SE	SI-QS-SSA-2 Straight Rigid In-Line	SI-LS83E	Two N.C. Contacts		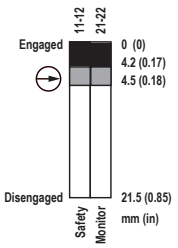
SI-LS83SRAE	SI-QS-SSA-3 Right-angle In-Line				
SI-LS83MRFE (Direct replacement for models SI-LS83MRHE and SI-LS83MRVE)	SI-QS-SSU Flexible In-Line		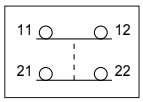	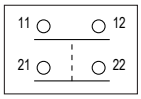	

Switching Diagram Key Contacts: Open Closed Transition

This symbol ( ) is used in the switching diagrams to identify the point in actuator travel where the normally closed safety contact is fully open.

Important Information Regarding the Use of Safety Switches

In the United States, the functions that Banner safety switches are intended to perform are regulated by the Occupational Safety and Health Administration (OSHA). Whether or not any particular safety switch installation meets all applicable OSHA requirements depends upon factors that are beyond the control of Banner Engineering Corp. These factors include the details of how the safety switches are applied, installed, wired, operated, and maintained.

WARNING:

- **Read this Section Carefully Before Installing the System**
- **Failure to follow these instructions could result in serious injury or death.**
- If all mounting, installation, interfacing, and checkout procedures are not followed properly, this Banner Engineering Corp. device cannot provide the protection for which it was designed.
- The user is responsible for ensuring that all local, state, and national laws, rules, codes, or regulations relating to the installation and use of this control system in any particular application are satisfied. Ensure that all legal requirements have been met and that all technical installation and maintenance instructions contained in this manual are followed.
- The user has the sole responsibility to ensure that this Banner Engineering Corp. device is installed and interfaced to the guarded machine by Qualified Persons, in accordance with this manual and applicable safety regulations. A Qualified person is a person who, by possession of a recognized degree or certificate of professional training, or who, by extensive knowledge, training and experience, has successfully demonstrated the ability to solve problems relating to the subject matter and work.

Banner Engineering Corp. recommends that safety switches be applied according to the guidelines set forth in international (ISO/IEC) standards listed below. Specifically, Banner Engineering Corp. recommends the application of these safety switches in a configuration that meets safety category 4, per ISO 13849.

It is the responsibility of the machine designer, controls engineer, machine builder, and/or maintenance electrician to apply and maintain this product in full compliance with all applicable regulations and standards. The product can provide the required safety function only it if is properly installed, properly operated, and properly maintained. This manual attempts to provide complete installation, operational, and maintenance instructions. Reading the manual completely is highly recommended. Please direct any questions regarding the application or use of this product to a Banner Engineering Applications Engineer at the locations listed in this document.

Application Assistance
Toll Free: 1-888-3-SENSOR (1-888-373-6767)
Email: sensors@bannerengineering.com
9714 Tenth Avenue North
Minneapolis, MN 55441

© Banner Engineering Corp. All rights reserved.
www.bannerengineering.com

U.S. Regulations Applicable to Use of Banner Safety Switches
OSHA Code of Federal Regulations: Title 29, Parts 1900 to 1910

U.S. Standards Applicable to Use of Banner Safety Switches
ANSI B11 Standards for Machine Tools Safety

ANSI B11.19 Performance Requirements for Risk Reduction Measures: Safeguarding and Other Means of Reducing Risk

NFPA 79 Electrical Standard for Industrial Machinery

ANSI/RIA R15.06 Safety Requirements for Industrial Robots and Robot Systems

Applicable European and International Standards
ISO 12100 Safety of Machinery – General Principles for Design – Risk Assessment and Risk Reduction

ISO 13852 (EN 294) Safety of Machinery – Safety Distances to Prevent Danger Zones Being Reached by the Upper Limbs

ISO 13853 (EN 811) Safety of Machinery – Safety Distances to Prevent Danger Zones Being Reached by the Lower Limbs

ISO 13857 Safety of Machinery – Safety Distances to Prevent Hazard Zones Being Reached

ISO 13849-1 Safety of Machinery – Safety-Related Parts of Control Systems – Part 1: General Principles for Design

EN 13855 (EN 999) The Positioning of Protective Equipment in Respect to Approach Speeds of Parts of the Human Body

ISO 14119 (EN 1088) Interlocking Devices Associated with Guards – Principles for Design and Selection

EN 60204-1 Electrical Equipment of Machines Part 1: General Requirements

IEC 60947-5-1 Low Voltage Switchgear – Electromechanical Control Circuit Devices

ISO 14120 Safety of machinery – Guards – General requirements for the design and construction of fixed and movable guards

Overview

Easy Access	Rotating the Actuator Head
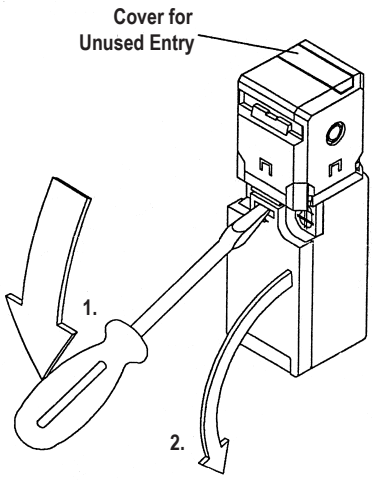	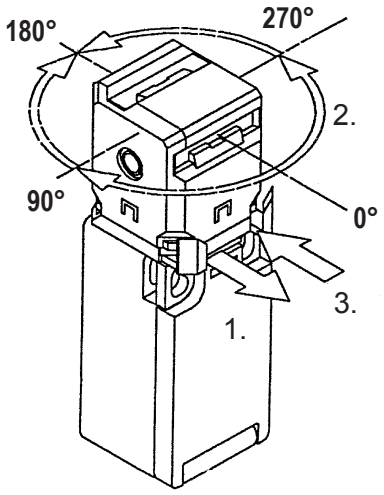 1. Pull holding clamp 2. Turn actuator head 3. Push holding clamp

Continued on page 6

© Banner Engineering Corp. All rights reserved.
www.bannerengineering.com

Continued from page 5

Easy Access	Rotating the Actuator Head
The wiring chamber is accessed via a hinged door. Simply insert a flat-blade screwdriver, as shown, and pry gently down to open.	The actuator head may be rotated in 90° increments to create eight possible actuator engagement locations. To rotate the head, pull the holding clamp forward, rotate the head to the desired position, and push the holding clamp back in to lock.

© Banner Engineering Corp. All rights reserved.

Chapter Contents

Mechanical Installation 7
Electrical Installation 7
Periodic Checks 8

Chapter 2 Installation Instructions

Mechanical Installation

All mounting hardware is supplied by the user. Fasteners must be of sufficient strength to guard against breakage. Use of permanent fasteners or locking hardware is recommended to prevent loosening or displacement of the actuator and the switch body. The mounting holes in the switch body and the actuator accept M5 screws (see "Dimensions" on page 11).

Position the switch, with its actuator fully engaged, in the mounting location and mark the mounting holes. Drill the required holes and fasten the switch body and the actuator in place. After the mounting hardware is secure, check the actuator-switch engagement for misalignment and binding.

IMPORTANT:

1. A safety switch must be installed in a manner that discourages tampering or defeat. Mount each switch to prevent bypassing of the switching function at the terminal chamber.
2. A switch and its actuator must never be used as a mechanical stop.

Electrical Installation

WARNING:

- **The hazard must be accessible only through the sensing field**
- Incorrect system installation could result in serious injury or death.
- The installation of the SI-LS83 and SI-LS100 Switch must prevent any individual from reaching around, under, over or through the defined area and into the hazard without being detected.
- See OSHA CFR 1910.217, ANSI B11.19, and/or ISO 14119, ISO 14120 and ISO 13857 for information on determining safety distances and safe opening sizes for your guarding device. Mechanical barriers (for example, hard (fixed) guarding) or supplemental safeguarding might be required to comply with these requirements.

CAUTION:

- **Safety switch installation**
- Using only one safety switch per interlock guard is not recommended.
- Use two safety switches for each interlock guard to achieve control reliability or Safety Category 4 (per ISO 13849-1) of a machine stop circuit.
- In addition, normally-closed (N.C.) safety contacts from each of the two safety switches should be connected to the two separate inputs of a two-channel safety monitoring device. This is required to monitor for safety switch contact failure and to provide the necessary reset routine, as required by IEC 60204-1 and NFPA 79 machine safety standards.

© Banner Engineering Corp. All rights reserved.
www.bannerengineering.com

WARNING:

- **Connecting safety switches in series**
- Monitoring multiple guards with a series connection of multiple safety interlock switches is not a Safety Category 4 Application (per ISO 13849-1). A single failure can be masked or not detected at all. The loss of a safety stop signal or an inappropriate reset can lead to serious injury or death.
- When such a configuration is used, procedures must be performed regularly to verify proper operation of each switch. Correct all failures immediately (for example, immediately replace a failed switch).

Access to the Wiring Chamber

The wiring chamber is accessed via the hinged door (see "Overview" on page 5). The SI-LS83 switches have a wire entrance of M16 x 1.5. The SI-LS100 models have a wire entrance of M20 x 1.5. All models come with an adaptor to convert to 1/2"–14 NPT. M16 x 1.5 and M20 x 1.5 cable glands are available, see "Accessories" on page 12 .

Connection to a Machine

As shown, a normally closed safety contact (i.e., a safety contact that is closed when the actuator is engaged) from each of two safety switches per interlocked guard must connect to a 2-channel safety module or safety interface to achieve a control reliable interface to the master stop control elements of a machine. Examples of appropriate safety modules include 2-channel emergency stop (E-stop) safety modules and gate monitor safety modules.

Switch Wiring to Safety Module

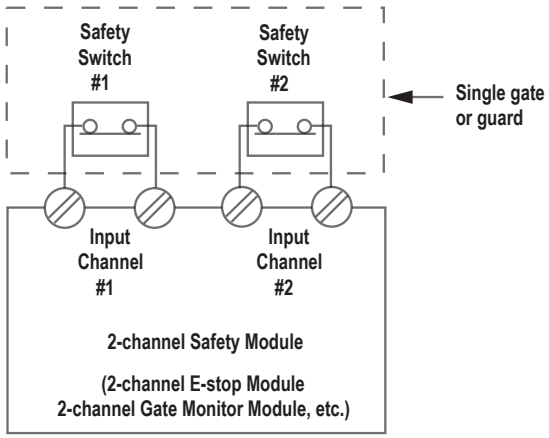

Refer to the installation instructions provided with the safety module for information regarding the interface of the safety module to the machine stop control elements.

Connect two redundant safety switches per interlock guard to an appropriate 2-channel input safety module.

Two functions of the safety module or safety interface are to:

1. provide a means of monitoring the contacts of both safety switches for contact failure, and to prevent the machine from restarting if either switch fails; and
2. provide a reset routine after closing the guard and returning the safety switch contacts to their closed position. This prevents the controlled machinery from restarting by simply reinserting the safety switch actuators. This necessary reset function is required by ANSI B11 and NFPA 79 machine safety standards.

Use only a positively driven, normally closed safety contact from each switch for connection to the safety module. The normally open contact may be used for control functions that are not safety-related. A typical use is to communicate switch status to a process controller. Refer to the installation instructions provided with the safety modules for more information regarding the interface of the safety module to the machine stop control elements.

Periodic Checks

Safety switches should be checked at each shift change or machine setup by a designated person for:

1. Breakage of the switch body or actuator,
2. Good alignment and full engagement of the actuator with the receptor,

© Banner Engineering Corp. All rights reserved.
www.bannerengineering.com

3. Confirmation that the safety switch is not being used as an end stop,
4. Loosening of the switch or actuator mounting hardware, and
5. Verification that it is not possible to reach any hazard point through an opened guard (or any opening) before hazardous machine motion has completely stopped.

In addition, a qualified person should check for the following on a periodic schedule determined by the user based upon the severity of the operating environment and the frequency of switch actuations:

1. Check the wiring chamber for signs of contamination.
2. Check the contacts for signs of deterioration or damage.
3. Inspect the electrical wiring for continuity and damage.
4. Verify the wiring conforms to the instructions given in this datasheet.

A designated person is identified in writing by the employer as being appropriately trained to perform a specified checkout procedure. A qualified person possesses a recognized degree or certificate or has extensive knowledge, training, and experience to be able to solve problems relating to the safety switch installation.

© Banner Engineering Corp. All rights reserved.

Chapter Contents

Dimensions.....11

Chapter 3 Specifications

Contact Rating

Rated Operational Voltage (U_e): 240 V AC, 250 V DC

Rated Impulse Withstand Voltage (U_{imp}): 4.0 kV

Maximum Making Current: 10 A

Contact Material

Silver-nickel alloy

Maximum Switching Speed

30 operations per minute

Maximum Actuator Speed

1 m/second (39 inches/second)

Minimum Actuator Engagement Radius

In-line actuators: 150 mm (6 inches)

Flexible actuators: 50 mm (2 inches) in all directions

Actuator Extraction Force

12 Newtons (2.6 lbf)

Short Circuit Protection

6 amp Slow Blow (gG)

Rated Conditional Short-Circuit Current: 1000 A

Recommended external fusing or overload protection.

Construction

Glass fiber-reinforced polyamide thermoplastic housing; UL 94-V0 rating

Weight

SI-LS83 models: 0.12 kg (0.26 lb)

SI-LS100 models: 0.13 kg (0.29 lb)

European Rating

Rating	Symbol	SI-LS100F	SI-LS83D	SI-LS83E
Rated Isolation Voltage	U_i	250 V AC	250 V AC	250 V AC
Conventional Thermal Current	I_{the}	5 A	10 A	10 A
Utilization Category (AC-15)	U_e / I_e	240 V/1.5 A	240 V/3 A	240 V/3 A
Utilization Category (DC-13)	U_e / I_e		250 V/0.27 A	250 V/0.27 A
NEMA Contact Rating		B300 (same polarity)	A300 Q300 (same polarity)	A300 Q300 (same polarity)

Mechanical Life

1 million operations

Wire Connections

Stranded and solid: 20 AWG (0.5 mm²) to 16 AWG (1.5 mm²) for one wire

Cable Entry

SI-LS83 models: M16 x 1.5 threaded entrance

SI-LS100 models: M20 x 1.5 threaded entrance

Adapter supplied with each switch to convert to ½"–14 NPT threaded entrance.

B10d

2×10^6 cycles at DC-13; 24 V; I_{e2} = 0.1 A

Environmental Rating

IP65

NOTE: Adding a No. 3 x 1/4-in screw (maximum) to the wiring access door increases sealing to IP67, NEMA 4X

Operating and Storage Conditions

–30 °C to +80 °C (–22 °F to +176 °F)

Certifications

Banner Engineering BV
Park Lane, Culliganlaan 2F bus 3
1831 Diegem, BELGIUM

Turck Banner LTD Blenheim House
Blenheim Court
Wickford, Essex SS11 8YT
GREAT BRITAIN

Required Overcurrent Protection

WARNING: Electrical connections must be made by qualified personnel in accordance with local and national electrical codes and regulations.

Overcurrent protection is required to be provided by end product application per the supplied table.

Overcurrent protection may be provided with external fusing or via Current Limiting, Class 2 Power Supply.

Supply wiring leads < 24 AWG shall not be spliced.

For additional product support, go to www.bannerengineering.com.

Supply Wiring (AWG)	Required Overcurrent Protection (A)	Supply Wiring (AWG)	Required Overcurrent Protection (A)
20	5.0	26	1.0
22	3.0	28	0.8
24	2.0	30	0.5

© Banner Engineering Corp. All rights reserved.
www.bannerengineering.com

Dimensions

Model SI-LS-100F Interlock Body

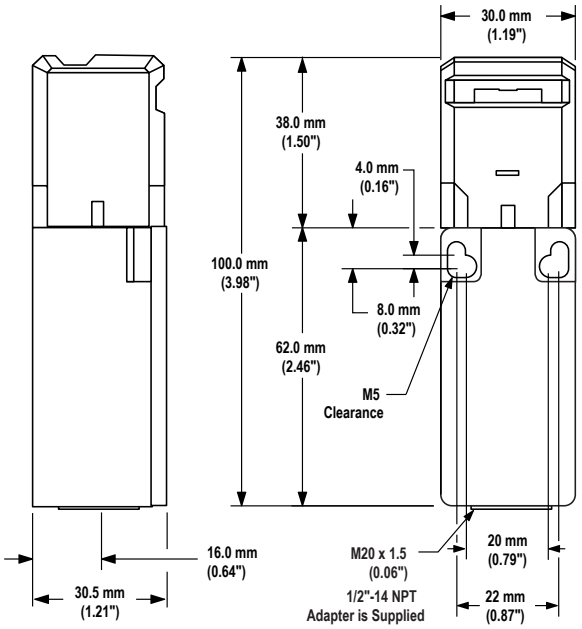

Model SI-LS-83x Interlock Body

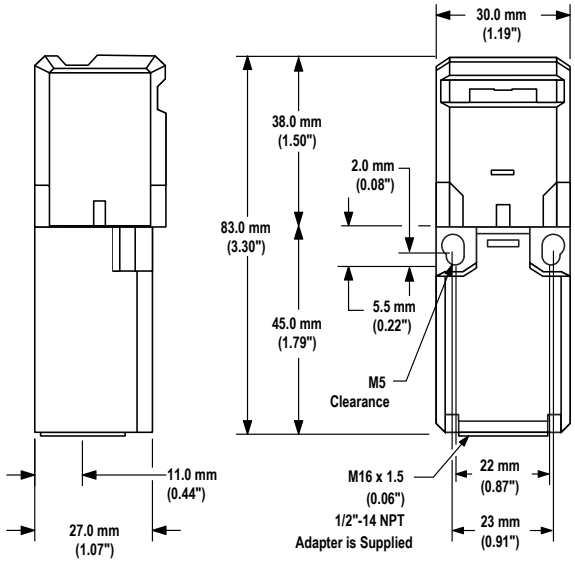

Model SI-QS-SSA-3 Right-Angle Actuator

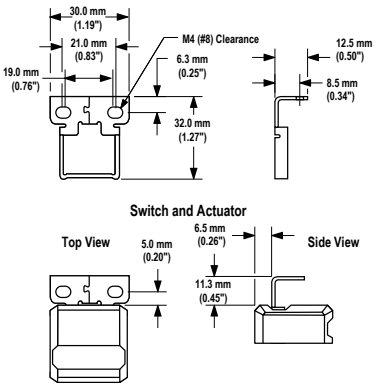

Model SI-QS-SSA-2 In-line Actuator

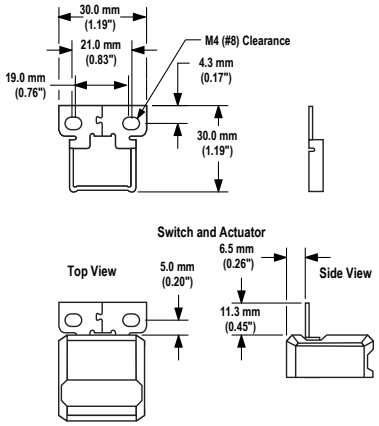

Model SI-QS-SSU Flexible Actuator

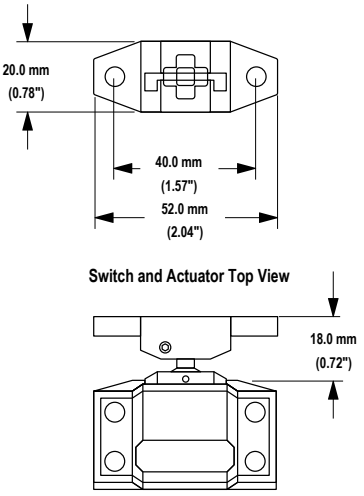

© Banner Engineering Corp. All rights reserved.
www.bannerengineering.com

Chapter Contents

Cable Glands 12
Conduit Adapters 12
Replacement Actuators 13

Chapter 4 Accessories

Cable Glands

Model	Size	For Cable Diameter	Dimensions	Used With
SI-QS-CGM16	M16 × 1.5 Plastic	3.0 to 8.0 mm (0.12 to 0.31 inches)	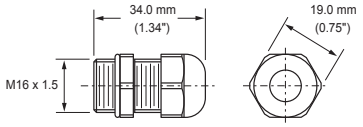	SI-LS83 Safety Interlock Switch SI-QS75 Safety Interlock Switch

Model	Size	For Cable Diameter	Dimensions	Used With
SI-QS-CGM20	M20 × 1.5 Plastic	5.0 to 12.0 mm (0.20 to 0.47 inches)	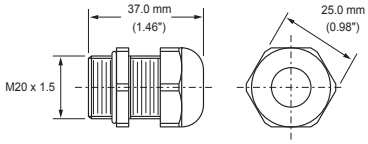	RP-LS42 Rope Pull Switch SI-GL42 Safety Interlock Switch SI-LS42 Safety Interlock Switch SI-LS100 Safety Interlock Switch SI-QS90 Safety Interlock Switch

Conduit Adapters

One conduit adapter is supplied with each switch.

Model	Size	Thread Conversion	Dimensions	Used With
SI-QS-M16	½ in-14 NPT Plastic	M16 × 1.5 to ½ in-14 NPT	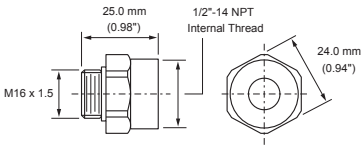	SI-LS83 Safety Interlock Switch SI-QS75 Safety Interlock Switch

Model	Size	Thread Conversion	Dimensions	Used With
SI-QS-M20	½ in-14 NPT Plastic	M20 × 1.5 to ½ in-14 NPT	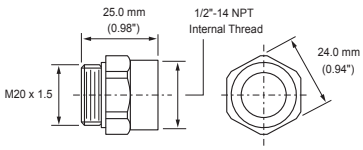	SI-GL42 Safety Interlock Switch SI-LS42 Safety Interlock Switch SI-LS100 Safety Interlock Switch SI-QS90 Safety Interlock Switch RP-LS42 Rope Pull Switch

© Banner Engineering Corp. All rights reserved.
www.bannerengineering.com

Replacement Actuators

Type	Model	Application
	SI-QS-SSA-3 (Inline) SI-QS-SSA-2 (Inline)	For doors or covers with a radius of 150 mm (6 in), or greater. (Pictured from left to right: -SSA-3 and -SSA-2).
	SI-QS-SSU (Flexible)	For hinged doors with a radius of 50 mm (2 in) or greater. Flexes in four directions. The actuator is die-cast steel.
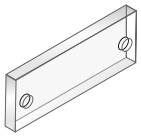	SI-QS-SSUA (Adapter Plate)	Clear acrylic adapter plate used to retrofit SI-QS-SSU to older flexible actuators SI-QS-HMA and SI-QS-VMA.

WARNING:

- **Spare actuators**
- Using spare actuators to bypass the safety switch could create an unsafe situation that could result in serious injury or death.
- Do not use spare actuators to bypass or otherwise defeat the protective function of a safety switch.

© Banner Engineering Corp. All rights reserved.
www.bannerengineering.com

Chapter Contents

Repairs 14
Contact Us 14
Banner Engineering Corp Limited Warranty 14
EU/UK Declaration of Conformity (DoC) 15

Chapter 5 Product Support and Maintenance

Repairs

Contact Banner Engineering for troubleshooting of this device. **Do not attempt any repairs to this Banner device; it contains no field-replaceable parts or components.** If the device, device part, or device component is determined to be defective by a Banner Applications Engineer, they will advise you of Banner's RMA (Return Merchandise Authorization) procedure.

Obtain assistance with product repairs by contacting your local Banner Engineering Corp distributor or by calling Banner directly at (763) 544-3164. Access literature translated into your native language on the Banner website at www.bannerengineering.com or contact Banner directly at (763) 544-3164.

Para reparaciones de productos, por favor contacte a su distribuidor local de Banner Engineering o llame a Banner directamente al 00 1 (763) 544-3164. Vea la literatura traducida en su idioma en el sitio web Banner en www.bannerengineering.com o comuníquese con Banner directamente al 00 1 (763) 544-3164.

Pour vous aider lors de la réparation de produits, contactez votre distributeur Banner local our appelez directement Banner au (763) 544-3164. La documentation traduite dans votre langue est disponible sur le site internet de Banner www.bannerengineering.com ou contactez directement Banner au (763) 544-3164.

请联系当地的 Banner Engineering Corp 经销商或直接致电 Banner +1 (763) 544-3164，以获得产品维修帮助。请访问邦纳网站 www.bannerengineering.com 或直接拨打 +1 (763) 544-3164 联系邦纳，获取翻译成您母语的资料。

제품 수리에 대한 지원은 지역 Banner Engineering Corp 대리점에 문의하거나 Banner에 직접 (763) 544-3164로 문의하실 수 있습니다. 사용자의 모국어로 번역된 자료는 Banner 웹사이트 www.bannerengineering.com에서 액세스하거나 Banner에 직접 (763) 544-3164로 문의하실 수 있습니다.

IMPORTANT: If instructed to return the device, pack it with care. Damage that occurs in return shipping is not covered by warranty.

WARNING:

- **Do not abuse the module after failure**—If an internal fault has occurred and the module will not reset, do not tap, strike, or otherwise attempt to correct the fault with a physical impact to the housing.
- Failure to follow these instructions could result in serious injury or death.
- An internal relay might have failed in such a manner that its replacement is required. If the module is not immediately replaced or repaired, multiple simultaneous failures might accumulate such that the safety function cannot be guaranteed.

Contact Us

Banner Engineering Corp. headquarters is located at: 9714 Tenth Avenue North | Plymouth, MN 55441, USA | Phone: + 1 888 373 6767

For worldwide locations and local representatives, visit www.bannerengineering.com.

Banner Engineering Corp Limited Warranty

Banner Engineering Corp. warrants its products to be free from defects in material and workmanship for one year following the date of shipment. Banner Engineering Corp. will repair or replace, free of charge, any product of its manufacture which, at the time it is returned to the factory, is found to have been

© Banner Engineering Corp. All rights reserved.
www.bannerengineering.com

defective during the warranty period. This warranty does not cover damage or liability for misuse, abuse, or the improper application or installation of the Banner product.

THIS LIMITED WARRANTY IS EXCLUSIVE AND IN LIEU OF ALL OTHER WARRANTIES WHETHER EXPRESS OR IMPLIED (INCLUDING, WITHOUT LIMITATION, ANY WARRANTY OF MERCHANTABILITY OR FITNESS FOR A PARTICULAR PURPOSE), AND WHETHER ARISING UNDER COURSE OF PERFORMANCE, COURSE OF DEALING OR TRADE USAGE.

This Warranty is exclusive and limited to repair or, at the discretion of Banner Engineering Corp., replacement. **IN NO EVENT SHALL BANNER ENGINEERING CORP. BE LIABLE TO BUYER OR ANY OTHER PERSON OR ENTITY FOR ANY EXTRA COSTS, EXPENSES, LOSSES, LOSS OF PROFITS, OR ANY INCIDENTAL, CONSEQUENTIAL OR SPECIAL DAMAGES RESULTING FROM ANY PRODUCT DEFECT OR FROM THE USE OR INABILITY TO USE THE PRODUCT, WHETHER ARISING IN CONTRACT OR WARRANTY, STATUTE, TORT, STRICT LIABILITY, NEGLIGENCE, OR OTHERWISE.**

Banner Engineering Corp. reserves the right to change, modify or improve the design of the product without assuming any obligations or liabilities relating to any product previously manufactured by Banner Engineering Corp. Any misuse, abuse, or improper application or installation of this product or use of the product for personal protection applications when the product is identified as not intended for such purposes will void the product warranty. Any modifications to this product without prior express approval by Banner Engineering Corp will void the product warranties. All specifications published in this document are subject to change; Banner reserves the right to modify product specifications or update documentation at any time. Specifications and product information in English supersede that which is provided in any other language. For the most recent version of any documentation, refer to: www.bannerengineering.com.

For patent information, see www.bannerengineering.com/patents.

EU/UK Declaration of Conformity (DoC)

Banner Engineering Corp. herewith declares that these products are in conformity with the provisions of the listed directives and all essential health and safety requirements have been met. For the complete DoC, please go to www.bannerengineering.com.

Product	Directive
SI-LS83 and SI-LS100 Style Safety Interlock Switch	EU: Machinery Directive 2006/42/EC; Low Voltage Directive 2014/35/EU
	UKCA: Electrical Equipment (Safety) Regulation 2016

Representative in EU: Spiros Lachandidis, Managing Director, **Banner Engineering BV** Park Lane | Culliganlaan 2F bus 3 | 1831 Diegem, BELGIUM

Representative in UK: Tony Coghlan, Managing Director, **Turck Banner LTD** Blenheim House | Blenheim Court | Wickford, Essex SS11 8YT | Great Britain

© Banner Engineering Corp. All rights reserved.
www.bannerengineering.com

LinkedIn

X (formerly Twitter)

Facebook



© 2025. All rights reserved.
www.bannerengineering.com