## BM.752P Series Glass Fiber

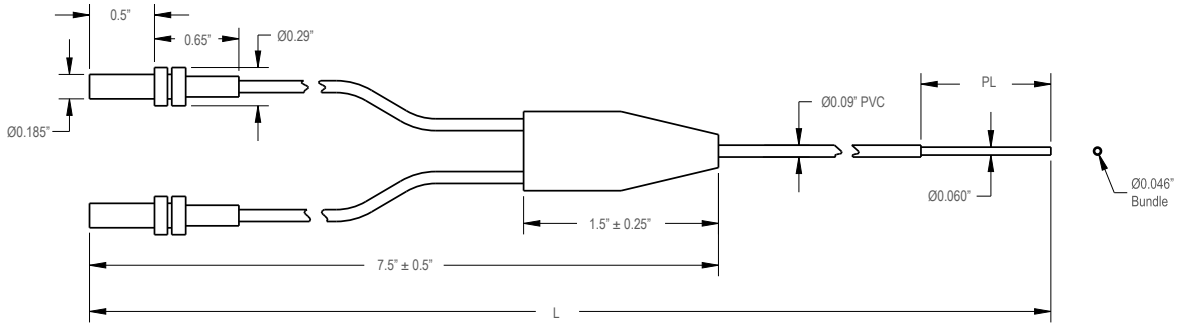


| Model | L (in) | PL (in) |
|---|---|---|
| **BM.752P** | 24 | 1 |

## BM.752PMA.25 Series Glass Fibers

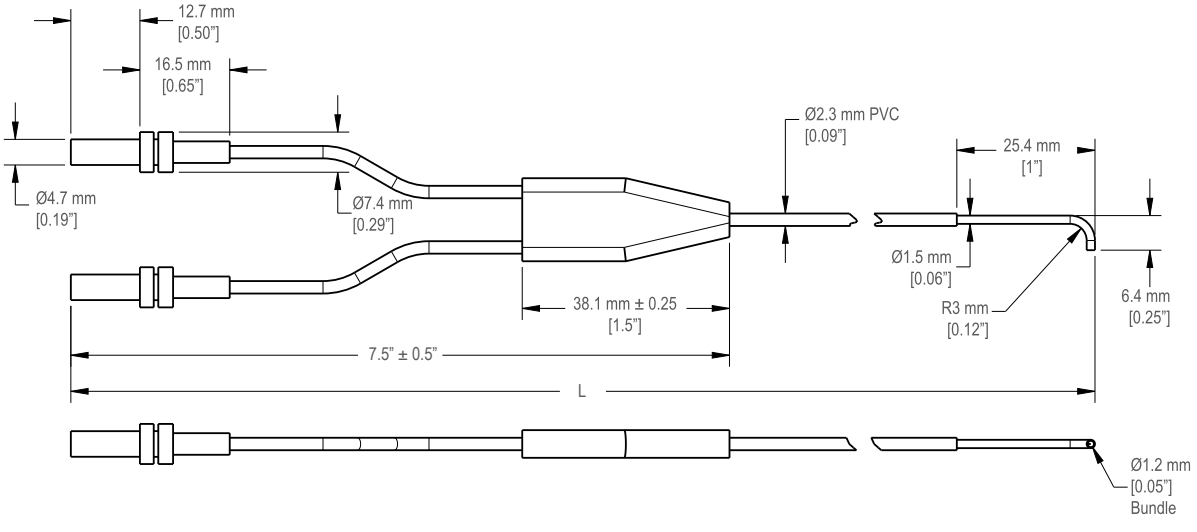


| Model | CAD Files | L (mm) |
|---|---|---|
| **BM.752PMA.25** | CAD files: DXF, PDF, IGS, STP | 610 |

Original Instructions
12-Aug-26

© Banner Engineering Corp. All rights reserved.
www.bannerengineering.com

b_51963898
p/n: b_51963898 Rev. B

ПРОМЭЛЕКТРОНИКА/ sales@prom-elec.com

# BM.75xS Series Fibers

*BM.75xS Series SS Terminated Glass Fibers*

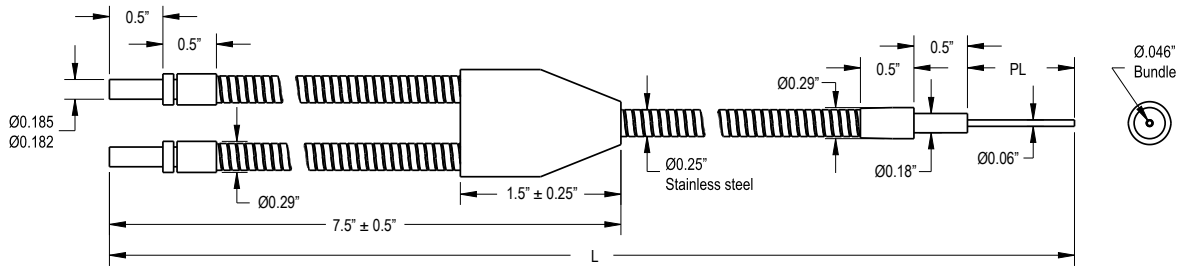


| Model | CAD Files | L (in) | PL (in) |
|---|---|---|---|
| **BM.752S** | CAD files: DXF, PDF, IGS, STP | 24 | 1 |
| **BM.753S** | | 36 | 1 |
| **BM.753SM2** | | 36 | 2 |
| **BM.754SM2** | | 48 | 2 |

*BM.752SMCTPL Series Fiberoptic Assembly*

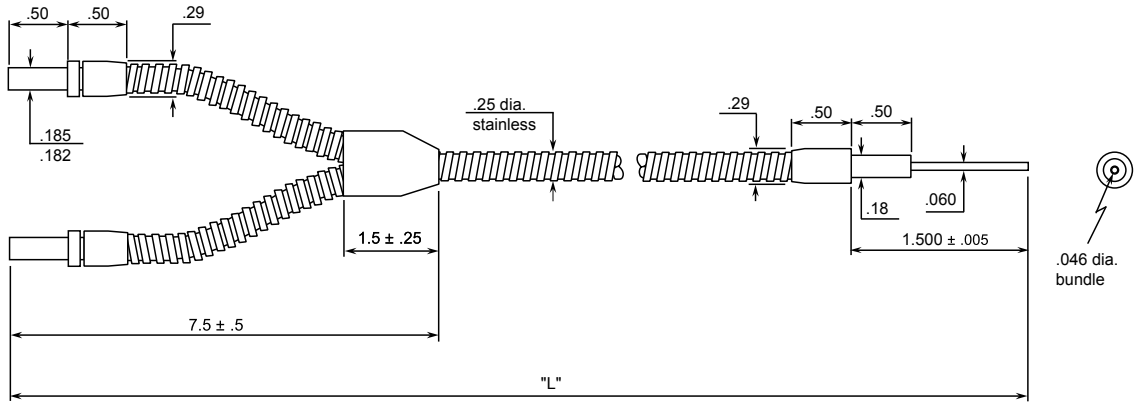


| Model | CAD Files | L (in) |
|---|---|---|
| **BM.752SMCTPL** | CAD files: PDF | 24 |


© Banner Engineering Corp. All rights reserved.
www.bannerengineering.com

# BMAP Series Fibers

*BMAP.442P Series Fibers*

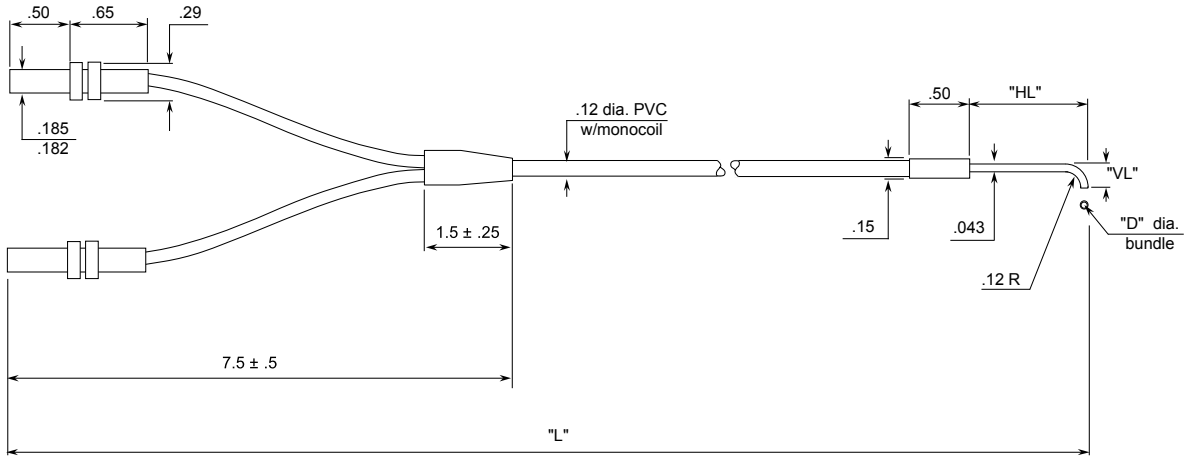


| Model | CAD Files | L (in) | HL (in) | VL(in) | D (in) |
|---|---|---|---|---|---|
| **BMAP.442P** | CAD files: PDF | 24 | 1 | 0.19 | 0.027 |

*BMAP.753P Series Fibers*

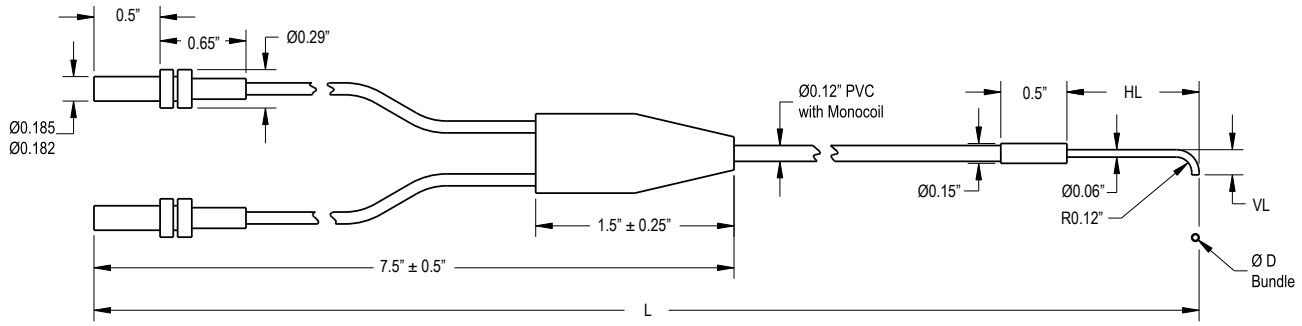


| Model | CAD Files | L (in) | HL (in) | VL(in) | D (in) |
|---|---|---|---|---|---|
| **BMAP.753P** | CAD files: PDF | 36 | 1 | 0.19 | 0.046 |
| **BMAP.753PM.38** | | 36 | 0.38 | 0.19 | 0.046 |


© Banner Engineering Corp. All rights reserved.
www.bannerengineering.com

# BMHAP Series Fibers

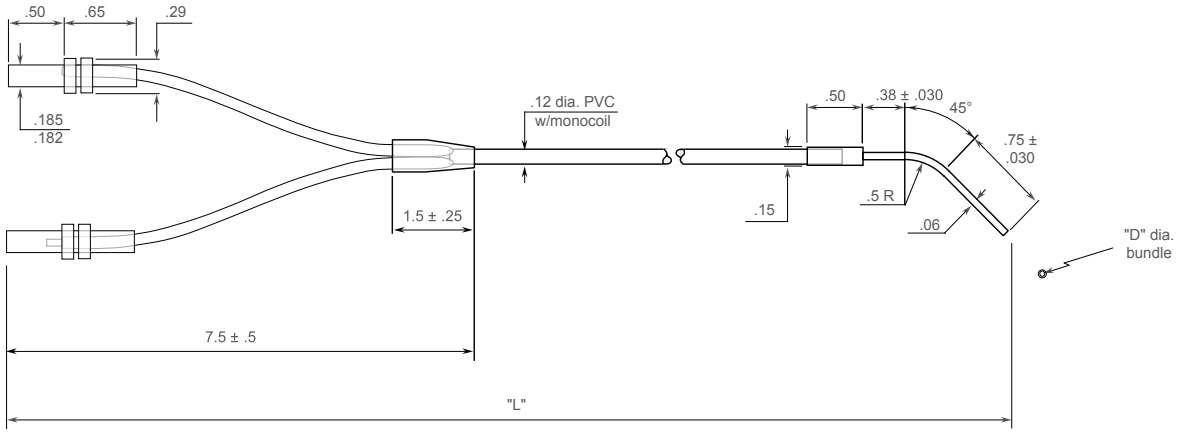


| Model | CAD Files | L (in) | D(in) |
|---|---|---|---|
| **BMHAP.753P** | CAD files: PDF | 36 | 0.046 |

# BMM.44xS Fibers

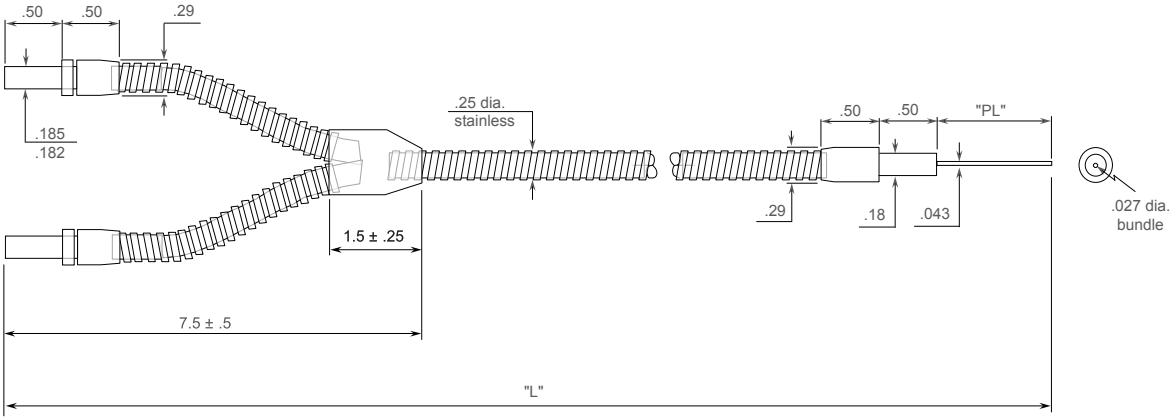


| Model | CAD Files | L (in) | PL (in) |
|---|---|---|---|
| **BMM.442S** | CAD files: PDF | 24 | 1 |
| **BMM.443S** | | 36 | 1 |


© Banner Engineering Corp. All rights reserved.
www.bannerengineering.com

# BMP Series Fibers

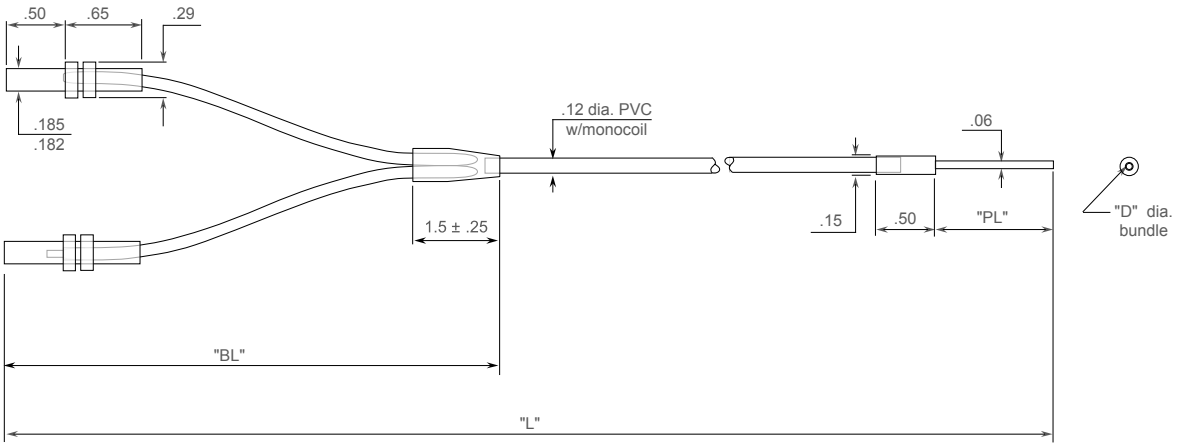


| Model | CAD Files | L (in) | PL (in) | BL (in) | D (in) |
|---|---|---|---|---|---|
| **BMP.753P** | CAD files: PDF | 36 | 1 | 7.5 ± 0.5 | 0.046 |

# BMT Series Fibers

*BMT.xxxP Series*

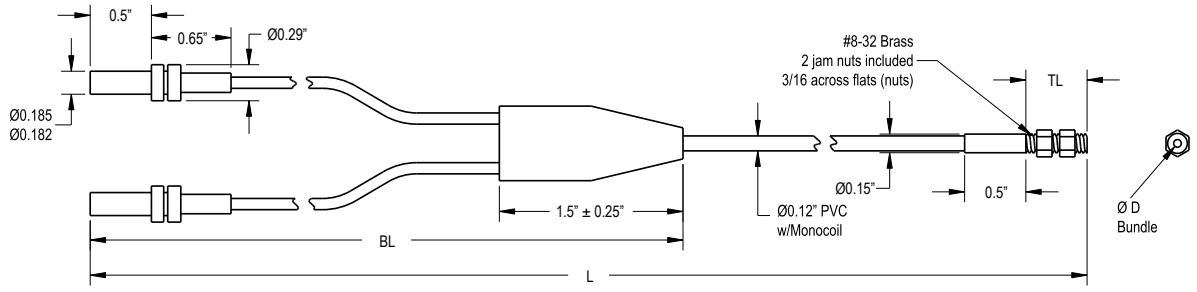


| Model | CAD Files | BL (in) | TL (in) | L (in) | D (in) |
|---|---|---|---|---|---|
| **BMT.442P** | CAD files: PDF | 7.5 ± 0.5 | 0.50 | 24 | 0.27 |
| **BMT.753P** | | 7.5 ± 0.5 | 0.50 | 36 | 0.046 |

*BMT.753S Series*

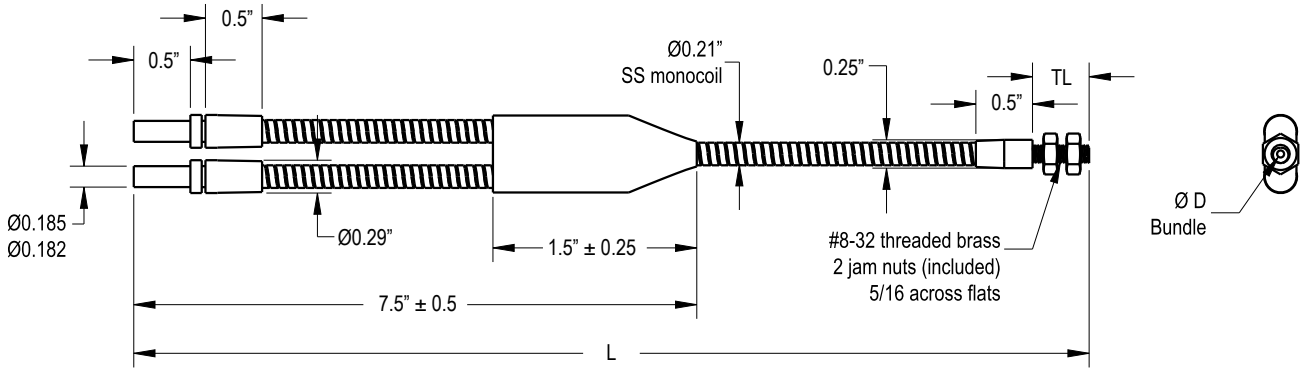


| Model | CAD Files | TL (in) | L (in) | D (in) |
|---|---|---|---|---|
| **BMT.753S** | CAD files: PDF | 0.50 | 36 | 0.046 |


© Banner Engineering Corp. All rights reserved.
www.bannerengineering.com

*BMT1xxx-HT Series*

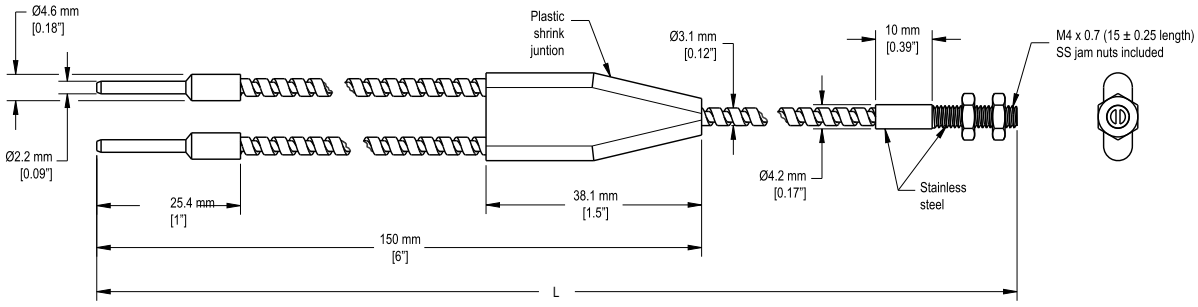


| Model | CAD Files | L |
|---|---|---|
| **BMT110S-HT** | CAD files: CAD files: DXF, PDF, IGS, STP | 3.048 m (120") |
| **BMT13.33S-HT** | | 1.016 m (40") |
| **BMT16.6S-HT** | | 2 m (79") |

*BMTAP.753P Fiber*

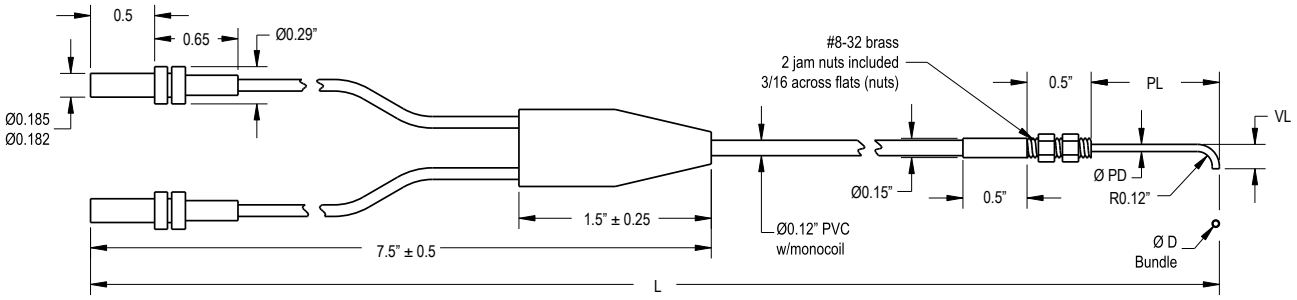


| Model | CAD Files | L (in) | PL (in) | VL (in) | PD (in) | D (in) |
|---|---|---|---|---|---|---|
| **BMTAP.753P** | CAD files: PDF | 36 | 1 | 0.19 | 0.06 | 0.046 |


© Banner Engineering Corp. All rights reserved.
www.bannerengineering.com