MODEL NO.	"L"	P/N
PIT660U	18288 [720]	51828
PIT615U	5000 [197]	48095
PIT6100U	30480 [1200]	45089
PIT675U	22860 [900]	42889
PIT630U	9144 [360]	39013
PIT66U	2000 [79]	39899

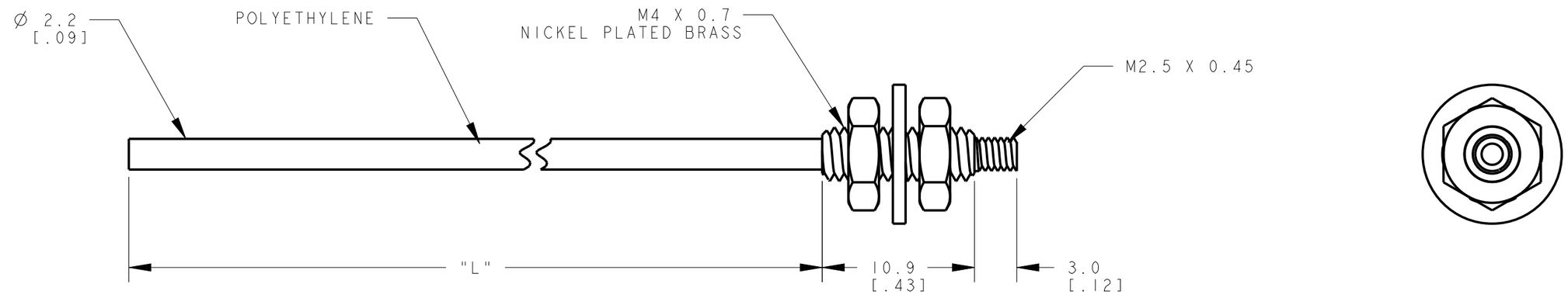

NOTES:
1. ALL DIMENSIONS ARE MILLIMETERS [INCHES] UNLESS OTHERWISE NOTED.
2. REFER TO "www.bannerengineering.com" FOR ADDITIONAL DATA AND SPECIFICATIONS.

This drawing is the property of BANNER ENGINEERING CORP. Any use or reproduction, in any form, without prior written permission of Banner is prohibited.
© 2015 Banner Engineering Corp.

THIRD ANGLE PROJECTION

BANNER ENGINEERING CORP.
www.bannerengineering.com

TITLE

PIT6 SERIES UNTERMINATED

SIZE	DRAWING NO.	REV.
B	161887	A
SCALE 3:1	SHEET 1 OF 1	

CREO

ПРОМЭЛЕКТРОНИКА/ sales@prom-elec.com