EZ-SCREEN® S4B Safety Light Curtain Product Manual

Original Instructions
p/n: 230287 Rev. E
24-Sep-26
© Banner Engineering Corp. All rights reserved. www.bannerengineering.com

ПРОМЭЛЕКТРОНИКА/ sales@prom-elec.com

Contents

Chapter 1 About This Document 5
1.1 Important... Read This Before Proceeding! 5
1.2 Use of Warnings and Cautions 5
1.3 EU Declaration of Conformity (DoC) 6

Chapter 2 Introduction 7
2.1 Features 7
2.2 System Description 7
2.2.1 Components 8
2.2.2 Models 8
2.2.3 Ordering Guide 9
2.2.4 S4B Light Curtains with Different FIDs 9
2.3 Appropriate Applications and Limitations 10
2.3.1 Appropriate Applications 11
2.3.2 Examples: Inappropriate Applications 11
2.4 Control Reliability: Redundancy and Self-Checking 11
2.5 Operating Features 12
2.5.1 Emitter Wiring Options 12
2.5.2 Status Indicators 12
2.5.3 Trip Output 13
2.5.4 External Device Monitoring (EDM) 13
2.5.5 Scan Code Configuration 13
2.5.6 Weak Beam Strength Indication 13
2.5.7 Cascading 14
2.5.8 Remote Fixed Blanking 14
2.5.9 Vibration (Beam) Tolerance 14
2.5.10 Reduced Resolution 15
2.5.11 DIP Switch Locations and Settings 15
2.5.12 Optical Synchronization 16

Chapter 3 Specifications 17
3.1 General Emitter and Receiver Specifications 17
3.2 Emitter Specifications 18
3.3 Receiver Specifications 18
3.4 Remote Fixed Blanking Configuration Tool (S4BA-RFB) Specifications 18
3.5 Mounting Dimensions and Defined Area: FID 1–3 19
3.6 Mounting Dimensions and Defined Area: FID 4 and Later 20
3.7 Remote Fixed Blanking Configuration Tool (S4BA-RFB) Dimensions 21

Chapter 4 Mechanical Installation 22
4.1 Mechanical Installation Considerations 22
4.2 Calculating the Safety Distance (Minimum Distance) 22
4.2.1 Safety Distance U.S. Formula and Definitions 23
4.2.2 Minimum Distance European Formula and Definitions 24
4.2.3 Examples 24
4.2.4 U.S. Applications, Model S4BR30-600-S 24
4.2.5 European Applications, Model S4BR30-600-S 25
4.3 Reducing or Eliminating Pass-Through Hazards 25
4.4 Supplemental Safeguarding 26
4.5 Reset Switch Location 27
4.6 Other Considerations 28
4.6.1 Adjacent Reflective Surfaces 28
4.6.2 Use of Corner Mirrors 29
4.6.3 Emitter and Receiver Orientation 30
4.6.4 Installation of Multiple Systems 31
4.7 Mounting System Components 33
4.7.1 Mounting Hardware 33
4.7.2 Sensor Mounting and Mechanical Alignment Verification 36
4.7.3 Mounting the S4BA-RFB 36

Chapter 5 Electrical Installation and Testing 38
5.1 Routing Cordsets 38
5.2 Scan Code Selection 38
5.3 Set Reduced Resolution: FID 4 and Later 39
5.4 Enable or Disable the End Cap Illumination: FID 4 and Later 40

© Banner Engineering Corp. All rights reserved. www.bannerengineering.com

5.5 Initial Electrical Connections ... 42
5.6 Initial Checkout Procedure ... 42
5.6.1 Configuring the System for Initial Checkout ... 42
5.6.2 Apply Initial Power to the System ... 43
5.6.3 Optically Align the System Components ... 43
5.6.4 Optical Alignment Procedure with Mirrors ... 44
5.6.5 EDM Functionality Test ... 45
5.6.6 Reduced Resolution (Floating Blanking) ... 45
5.6.7 Conduct a Trip Test ... 46
5.7 Using Remote Fixed Blanking ... 48
5.7.1 Programming Key Switch Location and LED Status ... 49
5.7.2 Remote Fixed Blanking Programming Procedure ... 51
5.7.3 Vibration (Beam) Tolerance Programming Procedure ... 52
5.8 Electrical Connections to the Guarded Machine ... 53
5.8.1 OSSD Output Connections ... 54
5.8.2 Protective Stop (Safety Stop) Circuits ... 54
5.8.3 Preparing for System Operation ... 56
5.8.4 Sensor Interchangeability ... 56
5.8.5 Commissioning Checkout ... 58
5.9 Wiring Diagrams ... 59
5.9.1 Generic Emitter Wiring Diagram ... 59
5.9.2 Generic Wiring Diagram— 5-pin Receiver and Self-checking Safety Module, Safety Controller, Safety PLC ... 61
5.9.3 Generic Wiring Diagram—8-pin Receiver and a Smart Device ... 62
5.9.4 Generic Wiring Diagram—8-pin Receiver and Redundant FSDs ... 63
5.9.5 Generic Wiring Diagram—8-pin Receiver and IM-T-9A Interface Module ... 64

Chapter 6 System Operation ... 65
6.1 Security Protocol ... 65
6.2 Normal Operation ... 65
6.2.1 System Power-Up ... 65
6.2.2 Run Mode ... 65
6.2.3 Emitter Indicators ... 65
6.2.4 Receiver Indicators ... 66
6.2.5 Illuminated End Cap Indication (FID 4 or Later) ... 67
6.3 Periodic Checkout Requirements ... 68
6.4 Factory Default Settings ... 68

Chapter 7 IO-Link Overview ... 69
7.1 IO-Link Capabilities ... 69
7.2 IO-Link Interface ... 70
7.3 IO-Link Configuration Software ... 70
7.4 Generic IO-Link Wiring ... 70
7.4.1 5-Pin IO-Link Adaptor Example ... 71
7.4.2 8-Pin IO-Link Adaptor Example ... 73

Chapter 8 Troubleshooting ... 75
8.1 Lockout Conditions ... 75
8.2 Emitter Error Codes ... 75
8.3 Receiver Error Codes ... 76
8.4 Electrical and Optical Noise ... 76
8.4.1 Checking for Sources of Electrical Noise ... 77
8.4.2 Check for Sources of Optical Noise ... 77

Chapter 9 Cascade ... 78
9.1 Overview of Cascading ... 78
9.1.1 System Components and Specifications ... 79
9.2 Cascade System Wiring ... 80
9.3 Configuring Cascade Systems ... 81
9.3.1 Initial Configuration or Add Units to the Cascade Chain ... 81
9.3.2 Reduce the Number of Units in a Cascade Chain ... 81
9.4 Determining Interconnect Cordset Lengths ... 82
9.5 Response Time for Cascaded Light Curtains ... 83
9.5.1 Determining Worst Case System Response Time ... 83
9.5.2 Determining System Response Time ... 83
9.5.3 Individual Response Time and Safety (Minimum) Distance ... 84
9.5.4 Recovery Time (Off to On) for Cascaded Light Curtains ... 84

Chapter 10 Checkout Procedures ... 86

© Banner Engineering Corp. All rights reserved. www.bannerengineering.com

10.1 Schedule of Checkouts ... 86

Chapter 11 Product Support and Maintenance ... 87
11.1 Supporting Files ... 87
11.2 Cleaning ... 87
11.3 Contact Us ... 87
11.4 Repairs and Translations ... 87
11.5 Manufacturing Date ... 90
11.6 Disposal ... 90
11.7 Banner Engineering Corp Limited Warranty ... 90

Chapter 12 Accessories ... 91
12.1 Safety Controllers ... 91
12.2 Interface Modules ... 91
12.3 Contactors ... 91
12.4 In-Line Sensor Status Indicator ... 91
12.5 Brackets ... 92
12.6 RD Cordsets—FID 1 Models ... 92
12.7 RD Cordsets—FID 2 or Later Models ... 93
12.8 Cordsets ... 94
12.9 IO-Link Adapters ... 97
12.10 Test Piece ... 98
12.11 Universal (Input) Safety Modules ... 98
12.12 Alignment Aids ... 98
12.13 SSM Series Corner Mirrors ... 99
12.14 MSA Series Stands ... 100
12.15 Muting Accessories ... 100
12.16 Remote Fixed Blanking Accessories ... 100
12.17 Adaptor Cables ... 101

Chapter 13 Standards and Regulations ... 103
13.1 Applicable U.S. Standards ... 103
13.2 Applicable European and International Standards ... 103

Index ... 104

Glossary ... 105

© Banner Engineering Corp. All rights reserved. www.bannerengineering.com

Chapter 1 About This Document

1.1 Important... Read This Before Proceeding!

It is the responsibility of the machine designer, controls engineer, machine builder, machine operator, and/or maintenance personnel or electrician to apply and maintain this device in full compliance with all applicable regulations and standards. The device can provide the required safeguarding function only if it is properly installed, properly operated, and properly maintained. This manual attempts to provide complete installation, operation, and maintenance instructions. *Reading the manual in its entirety is highly recommended to ensure proper understanding of the operation, installation, and maintenance.* Please direct any questions regarding the application or use of the device to Banner.

For more information regarding U.S. and international institutions that provide safeguarding application and safeguarding device performance standards, see "Standards and Regulations" on page 103.

WARNING:

- The user is responsible for following these instructions.
- **Failure to follow any of these responsibilities may potentially create a dangerous condition that could result in serious injury or death.**
- Carefully read, understand, and comply with all instructions for this device.
- Perform a risk assessment that includes the specific machine guarding application. Guidance on a compliant methodology can be found in ISO 12100 or ANSI B11.0.
- Determine what safeguarding devices and methods are appropriate per the results of the risk assessment and implement per all applicable local, state, and national codes and regulations. See ISO 13849-1, ANSI B11.19, and/or other appropriate standards.
- Verify that the entire safeguarding system (including input devices, control systems, and output devices) is properly configured and installed, operational, and working as intended for the application.
- Periodically re-verify, as needed, that the entire safeguarding system is working as intended for the application.

1.2 Use of Warnings and Cautions

The precautions and statements used throughout this document are indicated by alert symbols and must be followed for the safe use of the EZ-SCREEN® S4B Safety Light Curtain. Failure to follow all precautions and alerts may result in unsafe use or operation. The following signal words and alert symbols are defined as follows:

Signal Word and Symbol	Definition
WARNING:	**Warnings** refer to potentially hazardous situations which, if not avoided, could result in serious injury or death.
CAUTION:	**Cautions** refer to potentially hazardous situations which, if not avoided, could result in minor or moderate injury.

These statements are intended to inform the machine designer and manufacturer, the end user, and maintenance personnel, how to avoid misapplication and effectively apply the EZ-SCREEN® S4B Safety Light Curtain to meet the various safeguarding application requirements. These individuals are responsible to read and abide by these statements.

© Banner Engineering Corp. All rights reserved.
www.bannerengineering.com

1.3 EU Declaration of Conformity (DoC)

Banner Engineering Corp. herewith declares that these products are in conformity with the provisions of the listed directives and all essential health and safety requirements have been met. For the complete DoC, please go to www.bannerengineering.com.

Product	Directive
EZ-SCREEN® S4B Safety Light Curtain	EU: Machinery Directive 2006/42/EC

Representative in EU: Spiros Lachandidis, Managing Director, Banner Engineering BV | Park Lane | Culliganlaan 2F bus 3 | 1831 Diegem, BELGIUM

© Banner Engineering Corp. All rights reserved.
www.bannerengineering.com

Chapter 2 Introduction

2.1 Features

- A two-piece optoelectronic safeguarding device
- Creates a screen of synchronized, modulated infrared sensing beams that extend from end to end of the sensors (no "dead zone")
- Compact package for smaller production machines, robust for large power presses
- 14 mm and 30 mm resolutions
- Defined areas, in increments of 150 mm (6 in): 300 mm (12 in) to 1800 mm (71 in)
- 0.1 m to 12 m range (4 in to 39 ft); the range decreases with the use of corner mirrors:
    - Glass-surface mirrors—an approximately 8% reduction in range per mirror
- Zone and Status indicators for diagnostics
- FMEA tested to ensure control reliability
- Highly immune to EMI, RFI, ambient light, weld flash, and strobe light
- Safety PLC input compatible (per OSSD specifications)
- Up to 4 pairs of units can be cascaded together
- Integrated illuminated end cap reduces downtime by quickly alerting users to operational status, including weak beam strength, and can be turned on or off
- Reduced resolution can ignore one blocked beam while maintaining safety which reduces nuisance trips caused by machinery components or when small objects pass through, such as falling scraps or material being fed
- Configurable I/O pin can be used for IO-Link® control; auxiliary output that drives an alternate device or light, weak beam strength (default), or alternate status indication such as muting or reset required.
- IO-Link diagnostics logs last 10 faults, provides measurement output, and allows up to nine customizable LED override states



2.2 System Description

A Banner S4B emitter and receiver provides a redundant, microprocessor-controlled, opposed-mode optoelectronic safety light curtain. S4B typically is used for point-of-operation guarding, and is suited to safeguard a variety of machinery.

The S4B emitters have a row of synchronized modulated infrared (invisible) light-emitting diodes (LEDs) in a compact housing. Receivers have a corresponding row of synchronized photodetectors. The light curtain created by the emitter and receiver is called the defined area; its width and height are determined by the length of the sensor pair and the distance between them. The maximum sensing range is 12 m (39 ft), which decreases if corner mirrors are used. The defined area (sensing range) is equivalent to the height of the sensors (300 mm (12 in) to 1800 mm (71 in), in 150 mm (6 in) increments). The sensing area extends from end to end of the housing, also known as ‘no dead zone’. The end-to-end sensing design of the S4B allows mounting with minimal or no gaps in detection when using S4BA-MBK-16 brackets.

The S4B models have trip outputs (automatic power-up and automatic reset). In typical operation, if any part of an operator’s body or any opaque object of more than a pre-determined cross section is detected, the solid-state output signal switching device (OSSD) safety outputs turn OFF. These safety outputs are connected to the guarded machine’s final switching device or devices (FSDs) that control the machine primary control element or elements (MPCEs), which immediately stop the motion of the guarded machine. When the defined area becomes clear, the OSSD outputs are allowed to turn ON.

Eight-conductor S4B systems (receivers with an 8-pin RD (removable disconnect) cordset) do not require an external controller when using the external device monitoring (EDM) function. This function ensures the fault detection capability

© Banner Engineering Corp. All rights reserved.
www.bannerengineering.com

required by U.S. Control Reliability and ISO 13849-1 Categories 3 or 4 and PL d or e for controlling final switching devices (FSDs) or Machine Primary Control Elements (MPCEs).

Five-conductor S4B systems (receivers with 5-pin RD (removable disconnect) cordset) require a self-checking safety module, safety controller, or safety PLC/PES that conforms to the level of performance required by the risk assessment. Examples include the UM-FA-9A/11A safety module, SC10-2roe or XS/SC26 safety controller for applications requiring control reliability and/or ISO 13849-1 Category 3 or Category 4 and PL d or PL e.

Electrical connections (power, ground, inputs, and outputs) are made via M12 quick-disconnect connections.

All models require a supply voltage of +24 V DC ±15%.

Feature ID (FID) 2 or later models can be used in a cascade configuration if the appropriate RD (removable disconnect) cordsets are selected. Up to four sensor pairs (any length or resolution) can be automatically configured in a cascade chain (when adding sensor pairs).

FID 3 or later models allow the remote configuration of fixed blanking.

FID 4 or later models:

- Allow the enabling of one-beam floating blanking
- Include a lighted end cap on the receiver
- Use the weak beam strength output line as an IO-Link communication pin
- Control the lighted end cap and output wire settings using IO-Link
- Provide diagnostic information, including blocked beam information, using IO-Link

For FID information, see "S4B Light Curtains with Different FIDs" on page 9.

All models include the ability to select between two scan codes.

2.2.1 Components

An S4B 'System' refers to a compatible emitter and receiver of equal length and resolution, including cascaded configurations, and their cordsets. RD (removable disconnect) cordset to M12 cordsets, mounting brackets, and specified test pieces are sold separately. Depending on the connection option, interfacing solutions include SR-IM-.. modules, redundant positively guided contactors, and safety modules/controllers, which are sold separately.

Figure 1. Main Components

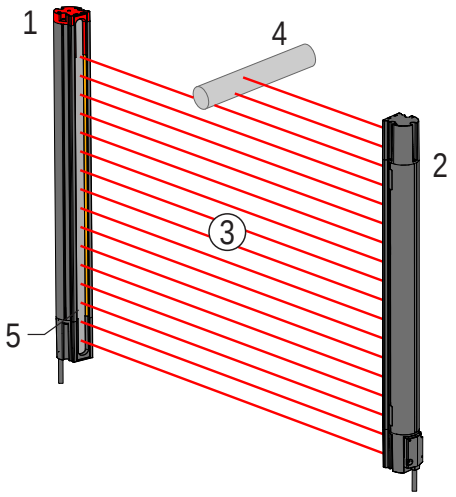

1. Receiver
2. Emitter
3. Defined area
4. Specified test piece
5. Location of the status indicators

2.2.2 Models

Table 1. 30 mm Models

Emitter	Receiver	Defined Area (mm)	Response Time, Tr (ms)	Recovery Time, OSSDs OFF to ON (ms)	
				Non-Sync Beam Blocked	All Beams Blocked
S4BE30-300-S	**S4BR30-300-S**	300	7.5	30 typical	49 typical, 295 maximum

Continued on page 9

© Banner Engineering Corp. All rights reserved.
www.bannerengineering.com

Continued from page 8

Emitter	Receiver	Defined Area (mm)	Response Time, Tr (ms)	Recovery Time, OSSDs OFF to ON (ms)	
				Non-Sync Beam Blocked	All Beams Blocked
S4BE30-450-S	S4BR30-450-S	450	8.5	36 typical	65 typical, 337 maximum
S4BE30-600-S	S4BR30-600-S	600	10.0	42 typical	75 typical, 379 maximum
S4BE30-750-S	S4BR30-750-S	750	11.5	48 typical	85 typical, 421 maximum
S4BE30-900-S	S4BR30-900-S	900	12.5	54 typical	98 typical, 463 maximum
S4BE30-1050-S	S4BR30-1050-S	1050	14.0	60 typical	112 typical, 506 maximum
S4BE30-1200-S	S4BR30-1200-S	1200	15.0	66 typical	122 typical, 544 maximum
S4BE30-1350-S	S4BR30-1350-S	1350	16.5	73 typical	128 typical, 582 maximum
S4BE30-1500-S	S4BR30-1500-S	1500	17.5	79 typical	141 typical, 620 maximum
S4BE30-1650-S	S4BR30-1650-S	1650	19.0	84 typical	150 typical, 658 maximum
S4BE30-1800-S	S4BR30-1800-S	1800	20.0	91 typical	172 typical, 697 maximum

Table 2. 14 mm Models

Emitter	Receiver	Defined Area (mm)	Response Time, Tr (ms)	Recovery Time, OSSDs OFF to ON (ms)	
				Non-Sync Beam Blocked	All Beams Blocked
S4BE14-300-S	S4BR14-300-S	300	11.5	48 typical	85 typical, 421 maximum
S4BE14-450-S	S4BR14-450-S	450	14.5	63 typical	117 typical, 525 maximum
S4BE14-600-S	S4BR14-600-S	600	17.5	78 typical	141 typical, 620 maximum
S4BE14-750-S	S4BR14-750-S	750	21.0	94 typical	178 typical, 736 maximum
S4BE14-900-S	S4BR14-900-S	900	24.0	108 typical	209 typical, 841 maximum
S4BE14-1050-S	S4BR14-1050-S	1050	27.0	124 typical	240 typical, 946 maximum
S4BE14-1200-S	S4BR14-1200-S	1200	30.5	137 typical	271 typical, 1051 maximum
S4BE14-1350-S	S4BR14-1350-S	1350	33.5	152 typical	298 typical, 1173 maximum
S4BE14-1500-S	S4BR14-1500-S	1500	36.5	167 typical	325 typical, 1278 maximum
S4BE14-1650-S	S4BR14-1650-S	1650	40.0	182 typical	356 typical, 1400 maximum
S4BE14-1800-S	S4BR14-1800-S	1800	43.0	196 typical	383 typical, 1505 maximum

2.2.3 Ordering Guide

To order a complete S4B system:

1. Determine if the application calls for a stand-alone emitter and receiver pair or if multiple pairs are to be used as part of a cascade system.
2. Choose the model numbers needed for the application.
   - Resolution: 14 mm or 30 mm
   - Appropriate length: 300 mm to 1800 mm
3. Determine the connection style, which is typically dictated by the type of interfacing with the machine's safety-related control system.

   See "Accessories" on page 91 for RD (removable disconnect) cordset options (5-pin or 8-pin).
4. Determine the desired mounting option to be used.

   See "Accessories" on page 91.
5. Determine the appropriate cabling needed for the application—machine interface cables and double-ended cables for the cascade configuration (if a cascade is being used).

   See "Accessories" on page 91.

2.2.4 S4B Light Curtains with Different FIDs

Over time, Banner adds new features to some devices. The Feature ID (FID) identifies the set of features and functions included in a particular model.

Generally, an increasing FID number corresponds to an increasing feature set. Optically, units of the same resolution and length can be interchanged and will work, regardless of FID. Different FIDs might require different models of interfacing RD (removable disconnect) cordsets (more features require different connectors). See the label on the S4B to determine the FID of a particular device.

© Banner Engineering Corp. All rights reserved.
www.bannerengineering.com

Figure 2. Example Label



Table 3. FID Descriptions

FID Number	Added Feature Set
FID 1	Initial release. No FID indication on the device.
FID 2	Added cascade ability. Added EDM ability (with 8-pin RD cordsets).
FID 3	Added remote configuration of fixed blanking.
FID 4	Added floating blanking abilities, IO-Link connectivity, a lighted end cap on the receiver, and a sync maintenance beam.

2.3 Appropriate Applications and Limitations

WARNING:
- **Read this Section Carefully Before Installing the System**
- **Failure to follow these instructions could result in serious injury or death.**
- If all mounting, installation, interfacing, and checkout procedures are not followed properly, this Banner device cannot provide the protection for which it was designed.
- The user is responsible for ensuring that all local, state, and national laws, rules, codes, or regulations relating to the installation and use of this control system in any particular application are satisfied. Ensure that all legal requirements have been met and that all technical installation and maintenance instructions contained in this manual are followed.
- The user has the sole responsibility to ensure that this Banner device is installed and interfaced to the guarded machine by Qualified Persons, in accordance with this manual and applicable safety regulations. A Qualified person is a person who, by possession of a recognized degree or certificate of professional training, or who, by extensive knowledge, training and experience, has successfully demonstrated the ability to solve problems relating to the subject matter and work.

The Banner S4B is intended for point-of-operation guarding and other safeguarding applications. It is the user's responsibility to verify whether the safeguarding is appropriate for the application and is installed, as instructed by this manual, by a Qualified Person.

The ability of the S4B to perform its safeguarding function depends upon the appropriateness of the application and upon its proper mechanical and electrical installation and interfacing to the guarded machine. **If all mounting, installation, interfacing, and checkout procedures are not followed properly, the S4B cannot provide the protection for which it was designed**.

WARNING:
- **Install System Only on Appropriate Applications**
- Failure to follow these instructions could result in serious injury or death.
- Use Banner's S4B only on machinery that can be stopped immediately after a stop signal is issued at any point in the machine's stroke or cycle, such as machines with a part-revolution clutch. Under no circumstances may the S4B be used on full-revolution clutched machinery or in unsuitable applications.
- If there is any doubt about whether or not your machinery is compatible with the S4B, contact Banner Engineering.

© Banner Engineering Corp. All rights reserved.
www.bannerengineering.com

2.3.1 Appropriate Applications

S4B is typically used for, but is not limited to, the following applications:

- Small assembly equipment
- Automated production equipment
- Robotic work cells
- Molding and power presses
- Assembly and packaging machines
- Lean manufacturing systems

Figure 3. Typical Application

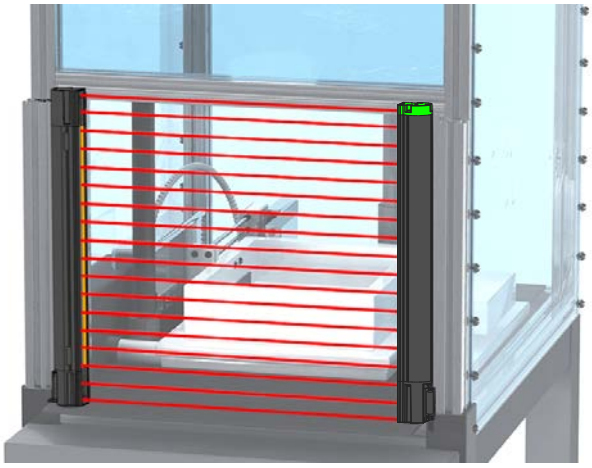

2.3.2 Examples: Inappropriate Applications

Do not use the S4B in the following applications:

- With any machine that cannot be stopped immediately after a stop signal is issued, such as single-stroke (or full-revolution) clutched machinery
- With any machine with inadequate or inconsistent machine response time and stopping performance
- With any machine that ejects materials or component parts through the defined area
- In any environment that is likely to adversely affect photoelectric sensing efficiency. For example, corrosive chemicals or fluids or unusually severe levels of smoke or dust, if not controlled, may degrade sensing efficiency
- As a tripping device to initiate or reinitiate machine motion (presence-sensing device initiation (PSDI) applications), unless the machine and its control system fully comply with the relevant standard or regulation (see OSHA 29CFR1910.217, NFPA 79, ANSI B11.19, ISO 12100, IEC 60204-1, IEC 61496-1, or other appropriate standard)

If the S4B is installed for use as a perimeter guard (where a pass-through hazard may exist, see "Reducing or Eliminating Pass-Through Hazards" on page 25), the dangerous machine motion can be initiated by normal means only after the safeguarded area is clear of individuals and the external safety monitoring device has been manually reset.

2.4 Control Reliability: Redundancy and Self-Checking

Redundancy requires that S4B circuit components be backed up to the extent that, if the failure of a single component will prevent effective machine stopping action when needed, that component must have a redundant counterpart which will perform the same function. The S4B is designed with redundant microprocessors.

Redundancy must be maintained whenever the S4B is in operation. Because a redundant system is no longer redundant after a component has failed, S4B is designed to monitor itself continuously. A component failure detected by or within the self-checking system causes a stop signal to be sent to the guarded machine and puts the S4B into a lockout condition.

A recovery from this type of lockout condition requires:

- Replacing the failed component (to restore redundancy), and
- Performing the appropriate reset procedure.

© Banner Engineering Corp. All rights reserved.
www.bannerengineering.com

2.5 Operating Features

The sensing resolution is determined by the emitter and receiver model.

WARNING:

- **Use of automatic (trip) or manual (latch) start/restart**
- Failure to follow these instructions could result in a serious injury or death.
- Applying power to the Banner device, clearing the defined area, or resetting a latch condition must not initiate dangerous machine motion. Design the machine control circuitry so that one or more initiation devices must be engaged to start the machine (a conscious act), in addition to the Banner device going into Run mode.

2.5.1 Emitter Wiring Options

An S4B emitter can be connected either to its own power supply or to the receiver cable, color-for-color. The color-for-color wiring allows the emitter and receiver positions to be interchanged without rewiring.

2.5.2 Status Indicators

Status indicators on both the emitter and receiver are clearly visible on the front panel of each sensor.

For more information, see "System Operation" on page 65.

Table 4. Emitter Status Indicators

Key	Description	
1	Status indicator (red/green)—shows whether power is applied (green), device is in a lockout condition (red flash), or the number of units in a cascade chain (green flash).	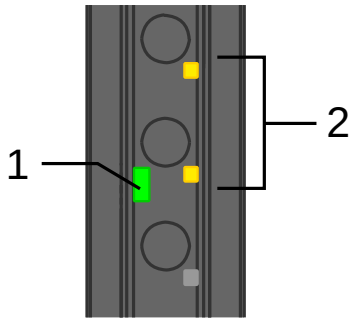
2	Scan Code indicator (red/green/yellow)—shows the scan code setting (1 or 2) at power-up	

Table 5. Receiver Status Indicators

Key	Description	
1	Status indicator (red/green)—shows System status: • Outputs are ON or OFF (green ON or red ON) • The System is in Lockout condition (flashing red) • Indicates the number of units in a cascade chain (green flash) • Indicates whether reduced resolution is enabled or disabled	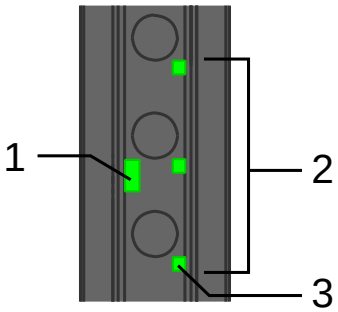
2	Zone indicators (red/green/yellow)—each shows the status of approximately 1/3 of the total beams. • Zone 1 indicator, at the bottom of this view, represents the 1/3 of the unit that is toward the RD (removable disconnect) cordset end of the unit • Zone 2 indicator, in the middle, represents the middle 1/3 of the unit • Zone 3 indicator, at the top of this view, represents the 1/3 of the unit closest to the end cap • Shows the scan code setting (1 or 2) at power-up.	
3	Zone 1 Indicator—indicates beam synchronization status	

An FID 4 receiver includes a lighted end cap that shows the status of the unit (stand-alone and cascade). The default settings are:

- All beams clear: Green
- Beams blocked: Flashing Red

© Banner Engineering Corp. All rights reserved.
www.bannerengineering.com

- Unit Faulted: Red/Yellow Alternating
- Weak Beam Strength: Yellow

Change the end cap settings via a DIP switch or IO-Link.

CAUTION:
- Misunderstanding of indicator colors
- Personnel may not understand the status of the safety system, which could lead to injury.
- Evaluate changes to the default colors of the receiver lighted end cap against the overall safety plan of the application. Clearly communicate the meanings of the colors to all personnel.

2.5.3 Trip Output

The System is configured for Trip Output, which allows the System to enter Run mode automatically. Other measures must be taken to prevent a pass-through hazard; see "Reducing or Eliminating Pass-Through Hazards" on page 25 and the warning below for more information.

The OSSD outputs turn ON after power is applied, and the receiver passes its internal self-test/synchronization and recognizes that all beams are clear. The Trip Output also automatically resets after all beams are cleared.

WARNING:
- **Use of automatic (trip) or manual (latch) start/restart**
- Failure to follow these instructions could result in a serious injury or death.
- Applying power to the Banner device, clearing the defined area, or resetting a latch condition must not initiate dangerous machine motion. Design the machine control circuitry so that one or more initiation devices must be engaged to start the machine (a conscious act), in addition to the Banner device going into Run mode.

2.5.4 External Device Monitoring (EDM)

The external device monitoring (EDM) feature allows the S4B to monitor the status of external devices, such as a machine primary control element (MPCE). The choices are one-channel monitoring or no monitoring. EDM is used when the S4B OSSD outputs directly control the MPCEs or other external devices.

This feature is only available when an 8-conductor interface is used with an FID 2 or later receiver.

2.5.5 Scan Code Configuration

Use the scan code to allow the operation of multiple pairs of emitters and receivers that are in close proximity, without the effects of crosstalk.

The emitter and receiver may be configured to use one of two scan codes (1 or 2); a receiver recognizes light only from an emitter with the same scan code. Set the scan code switches of the RD cordset of each sensor (see "Scan Code Selection" on page 38). Both the emitter and its corresponding receiver must have the same setting. Cascaded emitters and receivers automatically alternate scan codes based on the scan code of the first (host) pair.

The default setting is scan code 1.

2.5.6 Weak Beam Strength Indication

Weak beam strength is indicated when one or more channels are made, but the beam strength is marginal. This indication can be used to aid alignment of the sensor and also to indicate when window cleaning might be needed.

The Zone indicator representing the area of the channel(s) with the weak beam strength immediately turns yellow when the marginal signal is detected.

The weak beam strength output (pin 5 for 5-pin receivers, pin 3 for 8-pin receivers) turns ON any time one or more channels are detected with a marginal signal for longer than 1 minute. After the signal rises above the marginal level, the weak beam strength output turns OFF.

For a cascade system of FID 2 or FID 3 receivers with a host and one guest (two units), the weak beam strength output turns ON if either system has a weak beam.

© Banner Engineering Corp. All rights reserved.
www.bannerengineering.com

For a cascade system of FID 2 or FID 3 receivers with a host and multiple guests (three or four units), the weak beam strength output turns ON if the host has a weak beam. It also turns ON if all guests have a weak beam (if only one guest has a weak beam, the output will not turn ON).

For a cascade system of FID 4 receivers, the weak beam strength output turns ON if any system has a weak beam.

2.5.7 Cascading

Up to four sensor pairs (any length or resolution) can be combined into one system.

The cascade system automatically configures at power up when sensor pairs are added to the cascade chain. Removing sensor pairs from the chain requires operator intervention. See "Configuring Cascade Systems" on page 81.

This feature is available with FID 2 or later systems.

2.5.8 Remote Fixed Blanking

On FID 3 or later receiver models, fixed blanking is available to, in effect, “disable” beams that would otherwise be continually blocked by a stationary object. One or multiple areas within an S4B sensor pair may be “blanked out,” with a minimum of one beam between two blanked areas.

All beams of a fixed blanked area must remain blocked during operation in order for the OSSDs to remain ON.

The zone indicators flash on the receiver of the pair to show where fixed blanking is configured.

The Remote Fixed Blanking feature can configure an S4B receiver used as a stand-alone system or in a cascaded system. A DES4-M81-F51-D or DES4-M51-F51-D used with a S4BA-RFB, remote fixed blanking configuration tool, and a S4BA-RTP-1 for a single receiver or a DES4-M51-F51-D-REM used with a S4BA-RFB and a S4BA-RTP-1 for a cascade system provides a convenient means to program the blanked area. The S4BA-RFB can also be placed between receivers of a cascade system.

See "Using Remote Fixed Blanking" on page 48.

Figure 4. S4BA-RFB



2.5.9 Vibration (Beam) Tolerance

On FID 3 or later receiver models, once fixed blanking has been configured a vibration (beam) tolerance of 1 beam can be engaged.

The vibration (beam) tolerance feature can be used in blanking situations where the vibration is high enough that the edge beams of the blanked area might get blocked (for first unblocked beam) or cleared (first blanked beam) during operation.

The S4BA-RFB can be used to turn on and off vibration (beam) tolerance once a fixed blanked area has been taught. See "Using Remote Fixed Blanking" on page 48.

See also "Vibration Tolerance Limitations" on page 53.

© Banner Engineering Corp. All rights reserved.
www.bannerengineering.com

2.5.10 Reduced Resolution

Reduced Resolution increases the minimum diameter of an object that the light curtain can reliably detect anywhere (except in front of the synchronization beam, first beam at power up) within its defined area. This allows objects of a certain maximum size to interrupt the defined area without causing a Trip condition (that is, the OSSDs turn OFF).

Engaging reduced resolution requires at least two consecutive beams to be blocked to cause a Trip condition.

Reduced resolution is available only in FID 4 or higher S4B receivers.

The default setting is reduced resolution off.

For more information, see "Reduced Resolution (Floating Blanking)" on page 45.

2.5.11 DIP Switch Locations and Settings

The DIP switches set the scan code (all models) and configure the end cap light and reduced resolution (FID 4 and later models). They are located on the removable disconnect cordset assembly (all models) and on the control board under the end cap (FID 4 and later models).

Table 6. Removable Disconnect Cordset Assembly DIP Switches

Setting	DIP Switch 1 (Top)	DIP Switch 2 (Bottom)
Scan Code 1	Left (Off)	
Scan Code 2	Right (On)	
Run mode		Left (Off)
Clear Cascade Configuration		Right (On)

Table 7. Receiver DIP Switches

Setting	DIP Switch 1	DIP Switch 2	DIP Switch 3	Dip Switch 4
Reduced resolution enabled	Right (On)			Right (On)
Reduced resolution disabled	Left (Off)			Left (Off)
Receiver end cap light enabled		Left (Off)		
Receiver end cap light disabled		Right (On)		
Reset end cap and configurable I/O pin settings to default values		Right (On)	Right (On)	
Reserved—Keep in left (off) position			Left (Off)	

To access the DIP switches, remove the removable disconnect cordset assembly from the sensor by loosening the two or four screws (#1 Phillips drive), depending on the FID number.

NOTE: The screws are captive screws and should not be removed from the cordset assembly.

© Banner Engineering Corp. All rights reserved.
www.bannerengineering.com

Figure 5. Access the DIP Switches

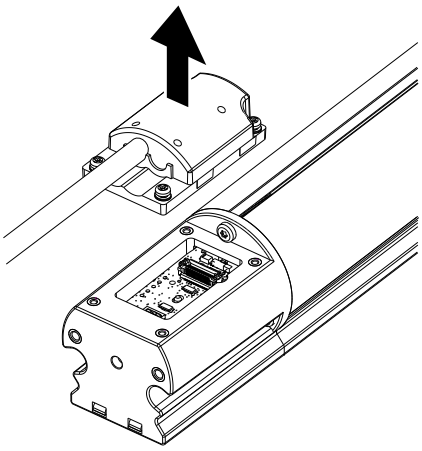

For complete instructions, see:

- "Scan Code Selection" on page 38
- "Set Reduced Resolution: FID 4 and Later" on page 39
- "Enable or Disable the End Cap Illumination: FID 4 and Later" on page 40
- "Reduce the Number of Units in a Cascade Chain" on page 81

2.5.12 Optical Synchronization

S4B emitter and receiver systems optically synchronize with each other. The first beam is the synchronization beam upon power up. This beam is the first beam at the removable disconnect end of the sensor.

FID 3 and earlier: If the first beam is blocked during operation, the curtain shows as blocked and the synchronization is lost. Only the Z1 zone indicator is red.

FID 4 or later: The first beam is the synchronization beam at power up. After the units have synchronized, the last beam of the unit becomes a synchronization maintenance beam. If the first beam is blocked, the synchronization maintenance beam maintains the system synchronization. Loss of synchronization can be caused by:

- Both the first and last beam are blocked
- The first beam is blocked for longer than 59 seconds

The recovery time of an FID 4 system with the synchronization beam blocked and the synchronization maintenance beam clear should be similar to the recovery time of a system where the non-sync beam is blocked. See "Models" on page 8.

If the synchronization maintenance beam has been fixed blanked and the synchronization beam is blocked, synchronization is lost. When synchronization is lost, the recovery time of the system will be between the recovery times for the non-sync beam blocked recovery times and the all beams blocked recovery times.

© Banner Engineering Corp. All rights reserved.
www.bannerengineering.com

Chapter 3 Specifications

3.1 General Emitter and Receiver Specifications

Safety Ratings

Type 4 per IEC 61496-1, -2

Category 4 PL e per EN ISO 13849-1

SIL3 per IEC 61508

Proof Test Interval: 20 years

Table 8. FID 1–3: 30 mm Models

Configuration	PFH_d (IEC 61508)	$MTTF_d$ (EN ISO 13849-1)
1-pair cascade (standalone)	7.68×10^{-9}	176 years
2-pair cascade (host + 1 guest)	1.36×10^{-8}	91 years
3-pair cascade (host + 2 guest)	1.96×10^{-8}	61 years
4-pair cascade (host + 3 guest)	2.56×10^{-8}	46 years

Table 9. FID 1–3: 14 mm Models

Configuration	PFH_d (IEC 61508)	$MTTF_d$ (EN ISO 13849-1)
1-pair cascade (standalone)	5.81×10^{-9}	155 years
2-pair cascade (host + 1 guest)	9.96×10^{-9}	98 years
3-pair cascade (host + 2 guest)	1.41×10^{-8}	72 years
4-pair cascade (host + 3 guest)	1.83×10^{-8}	56 years

Table 10. FID 4 and Later: 30 mm Models

Configuration	PFH_d (IEC 61508)	$MTTF_d$ (EN ISO 13849-1)
1-pair cascade (standalone)	3.08×10^{-9}	287 years
2-pair cascade (host + 1 guest)	5.37×10^{-9}	176 years
3-pair cascade (host + 2 guest)	7.66×10^{-9}	127 years
4-pair cascade (host + 3 guest)	9.95×10^{-9}	99 years

Table 11. FID 4 and Later: 14 mm Models

Configuration	PFH_d (IEC 61508)	$MTTF_d$ (EN ISO 13849-1)
1-pair cascade (standalone)	3.05×10^{-9}	289 years
2-pair cascade (host + 1 guest)	5.32×10^{-9}	178 years
3-pair cascade (host + 2 guest)	7.58×10^{-9}	128 years
4-pair cascade (host + 3 guest)	9.84×10^{-9}	100 years

Short Circuit Protection

All inputs and outputs are protected from short circuits to +24 V DC or DC common

Electrical Safety Class

III (per IEC 61140)

Effective Aperture Angle (EAA)

Meets Type 4 requirements per IEC 61496-2

Operating Conditions

–20 °C to +55 °C (–4 °F to +131°F)

95% maximum relative humidity (non-condensing)

Storage Temperature

–30 °C to +65 °C (–22 °F to +149 °F)

Environmental Rating

For indoor use only

IP65 (EN 60529)

Resolution

14 mm and 30 mm (Reduced resolution off)

Operating Range

0.1 m to 12 m (4 in to 39 ft)

IO-Link Interface (FID 4 and later)

Supports Smart Sensor Profile: No

Baud Rate: 38400 bps (COM2)

Process Data Widths: 16 bits

IODD Files: Provides programming options for the end cap indicator and configurable input output pin, plus diagnostic functionality

Enclosure

FID 1–3: Anodized aluminum housing with zinc die-cast end caps, polycarbonate window

FID 4 and later: Anodized aluminum housing with glass-filled polycarbonate end caps, polycarbonate window

Mounting Hardware

Mounting hardware is ordered separately.

Models longer than 900 mm require an additional side mount bracket.

Side mount brackets are made of glass-filled polycarbonate.

End mounting brackets (S4BA-MBK-11 for FID3 and older sensors) have a glass-filled polycarbonate adapter and 8-gauge cold-rolled steel, black zinc finish brackets.

End mount brackets (S4BA-MBK-12 for FID4 and later) are 8-gauge cold-rolled steel with black zinc finish

Vibration and Mechanical Shock

Components have passed vibration and shock tests according to IEC 61496-1 (Class 3M4) (FID4 and later: with S4BA-MBK-16 brackets). This includes vibration (30 cycles) of 5 Hz to 150 Hz at 3.5 mm (0.14 in) amplitude and 1 g acceleration, and shock of 15 g for 6 milliseconds (600 cycles).

Components have passed vibration and shock tests according to UL61496-1 (FID4 and later: with S4BA-MBK-16 brackets). This includes vibration (30 cycles) of 10 Hz to 55 Hz at 0.35 mm (0.014 in) amplitude, and shock of 10 g for 16 milliseconds (6,000 cycles).

Certifications

c UL us LISTED AOPD 10GH

CE

© Banner Engineering Corp. All rights reserved.

3.2 Emitter Specifications

Supply Voltage at the Device

+24 V DC ±15% (use a SELV-rated power supply according to EN IEC 60950)

Power supply must meet the requirements of IEC 60204-1.

The external voltage supply must be capable of buffering brief mains interruptions of 20 ms as specified in IEC/EN 60204-1 and IEC 61496-1.

Residual Ripple

± 10% maximum

Status Indicators

One bi-color (red/green) Status Indicator: indicates operating mode, lockout or power Off condition

Two tri-color (red/green/yellow) Scan Code Indicators: shows scan code setting (1 or 2) at power-up

Supply Current

33 mA typical

46 mA maximum(1)

Wavelength of Emitter Elements

Infrared LEDs, 860 nm at peak emission

Controls and Adjustments

Scan Code Selection: 2 dual-position switches, located in the RD (removable disconnect) cordset, to select between scan codes (code 1 or 2)

Factory default position is scan code 1

(1) Maximum current occurs at a supply voltage of 20 V DC.

3.3 Receiver Specifications

Supply Voltage at the Device

+24 V DC ±15% (use a SELV-rated power supply according to EN IEC 60950)

Power supply must meet the requirements of IEC 60204-1.

The external voltage supply must be capable of buffering brief mains interruptions of 20 ms as specified in IEC/EN 60204-1 and IEC 61496-1.

Residual Ripple

±10% maximum

Status Indicators

Bi-color (red/green) Status indicator: indicates general system and output status

Tri-color (red/green/yellow) Zone Status indicators: indicate condition (clear, weak, or blocked beam) of a defined group of beams and also shows the scan code at start up

FID4 and later: Configurable lighted end cap: indicates condition (clear, weak, blocked beam, or fault)

Output Signal Switching Devices (OSSDs)

Two redundant solid-state 24 V DC, 0.5 A maximum sourcing OSSD (Output Signal Switching Device) safety outputs (use optional interface solutions for AC or larger DC loads)

ON-State voltage: > Vin - 1.5 V DC

OFF-State voltage: 0 V DC typical, 1 V DC maximum (no load)

OFF-State, maximum allowed external voltage: 1.5 V DC(2)

Maximum load capacitance: 1.0 µF

Maximum cable resistance to load: 5 ohms per wire

Maximum leakage current: 50 µA (with open 0 V)

OSSD test pulse width: 200 µs typical

OSSD test pulse period: 200 ms typical

Switching current: 0 A minimum; 0.5 A maximum (per OSSD)

Weak Beam Strength Output

Current-sourcing (PNP) solid-state output, 100 mA at 24 V DC

(2) The maximum voltage allowed on the OSSDs in the OFF-state without a lockout occurring. This voltage may occur, for example, from the input structure of a safety relay module connected to the S4B OSSDs.

Supply Current (no load)

FID 1-3:

72 mA typical
100 mA maximum(3)

FID 4 and later:

96 mA typical

144 mA maximum(3)

Exclusive of OSSD1 and OSSD2 loads (up to additional 0.5 A each)

Response Time

See "Models" on page 8

Recovery Time

Blocked to Clear (OSSDs Off to On; varies with total number of sensing beams and whether the synchronization beams are blocked).

See "Models" on page 8

Controls and Adjustments

Scan Code Selection: Two dual-position switches, located in the RD (removable disconnect) cordset, to select between scan codes (code 1 or 2)
Factory default position is scan code 1

FID4 and later: Reduced Resolution Selection: four dual-position switches located on the board under the RD cordset. Switches 1 and 4 are used to enable/disable reduced resolution
Factory default position is reduced resolution disabled

FID4 and later: Lighted end cap selection: four dual-position switches located on the board under the RD cordset. Switch 2 is used to enable/disable the end cap LED.
Factory default position is end cap LED enabled.

EDM Input (Available with 8-Conductor Models)

+24 V DC signals from external device contacts can be monitored (one channel or no monitoring) via the EDM terminal in the receiver.

High Signal: 10 V DC to 30 V DC at 30 mA, typical

Low Signal: 0 V DC to 3 V DC

(3) Maximum current occurs at a supply voltage of 20 V DC.

3.4 Remote Fixed Blanking Configuration Tool (S4BA-RFB) Specifications

Supply Voltage

+24 V DC ±15% (use a SELV-rated power supply according to EN IEC 60950)

Power supply must meet the requirements of IEC 60204-1.

© Banner Engineering Corp. All rights reserved.
www.bannerengineering.com

The external voltage supply must be capable of buffering brief mains interruptions of 20 ms as specified in IEC/EN 60204-1 and IEC 61496-1.

Residual Ripple
± 10% maximum

Supply Current
35 mA maximum

Maximum Cable Length
15.2 m (50 ft)

Short Circuit Protection
All inputs are protected from short circuits to +24 V DC or DC common

Electrical Safety Class
III (per IEC 61140)

Operating Conditions
–20 °C to +55 °C (–4 °F to +131°F)

Storage Temperature
–30 °C to +65 °C (–22 °F to +149 °F)

Environmental Rating
For indoor use only
IP65 (EN 60529)

Status Indicators
Bi-color (red/green) indicators to indicate power to the S4BA-RFB (Run), Fixed Blanking Engaged (I), and Vibration Tolerance (II) engaged

Controls and Adjustments
S4BA-RFB Key Switch: 3-position switch located on the front of the S4BA-RFB, to engage and disengage fixed blanking and/or vibration (beam) tolerance

Construction
Polycarbonate housing with Nickel plated brass connectors

Mounting Hardware
Mounting hardware is user-supplied

Vibration and Mechanical Shock
Components have passed vibration and shock tests according to IEC 61496-1 (Class 3M4). This includes vibration (30 cycles) of 5 Hz to 150 Hz at 3.5 mm (0.14 in) amplitude and 1 g acceleration, and shock of 15 g for 6 milliseconds (600 cycles).

Certifications

c UL us LISTED AOPD 10GH

CE

3.5 Mounting Dimensions and Defined Area: FID 1–3

All measurements are listed in millimeters [inches], unless noted otherwise. The measurements provided are subject to change.

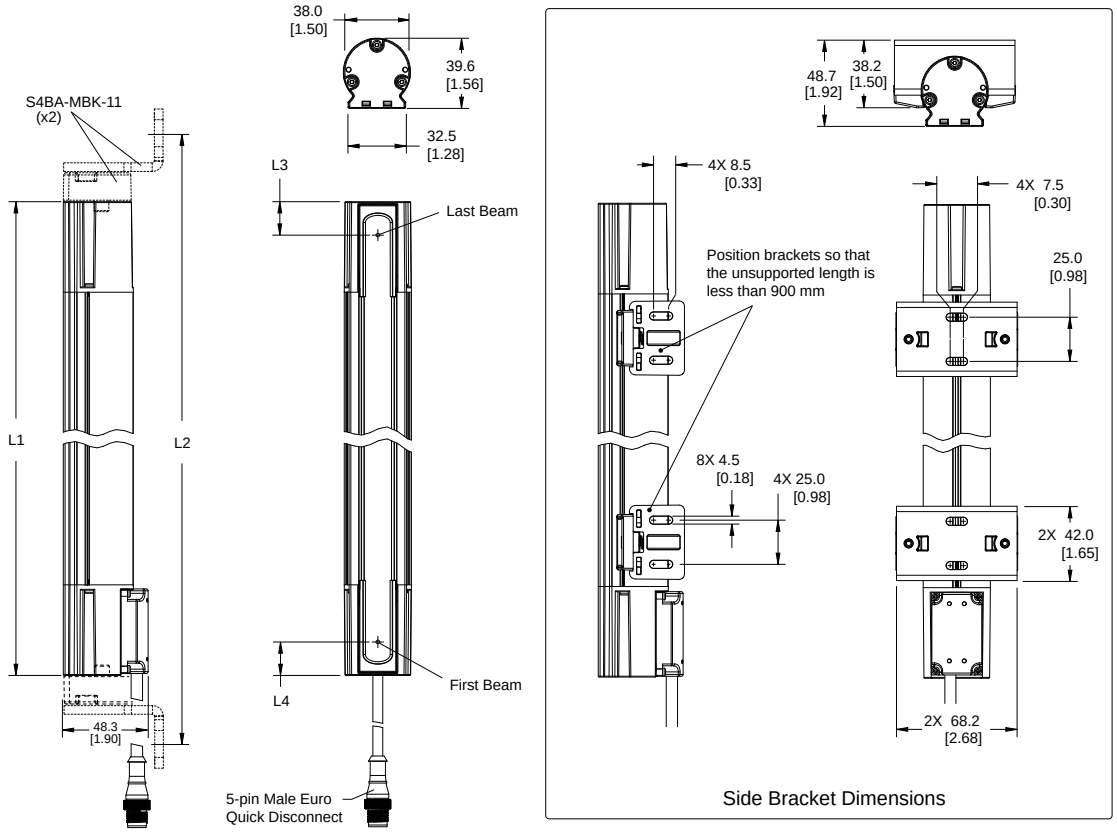

Emitter/Receiver Model	Housing Length (L1)	Hole to Hole Length with Brackets Out (L2)	Defined Area (mm)
S4B...-300-S	312.03 mm (12.28 in)	370.43 mm (14.58 in)	300

Continued on page 20

© Banner Engineering Corp. All rights reserved.
www.bannerengineering.com

Continued from page 19

Emitter/Receiver Model	Housing Length (L1)	Hole to Hole Length with Brackets Out (L2)	Defined Area (mm)
S4B...-450-S	460.73 mm (18.14 in)	519.13 mm (20.44 in)	450
S4B...-600-S	609.98 mm (24.01 in)	668.38 mm (26.31 in)	600
S4B...-750-S	758.68 mm (29.87 in)	817.08 mm (32.17 in)	750
S4B...-900-S	907.93 mm (35.75 in)	966.33 mm (38.04 in)	900
S4B...-1050-S	1056.63 mm (41.6 in)	1115.03 mm (43.90 in)	1050
S4B...-1200-S	1205.88 mm (47.48 in)	1264.28 mm (49.77 in)	1200
S4B...-1350-S	1354.58 mm (53.33 in)	1412.98 mm (55.63 in)	1350
S4B...-1500-S	1503.83 mm (59.21 in)	1562.23 mm (61.51 in)	1500
S4B...-1650-S	1652.53 mm (65.06 in)	1710.93 mm (67.36 in)	1650
S4B...-1800-S	1801.78 mm (70.94 in)	1860.18 mm (73.24 in)	1800

Emitter/Receiver Model	Last Beam Location (L3)	First Beam Location (L4)
30 mm Models	17.4 mm to 20.4 mm (0.69 in to 0.8 in)	18.9 mm (0.74 in)
14 mm Models	10.9 mm to 11.9 mm (0.43 in to 0.47 in)	11.4 mm (0.45 in)

3.6 Mounting Dimensions and Defined Area: FID 4 and Later

All measurements are listed in millimeters [inches], unless noted otherwise. The measurements provided are subject to change.

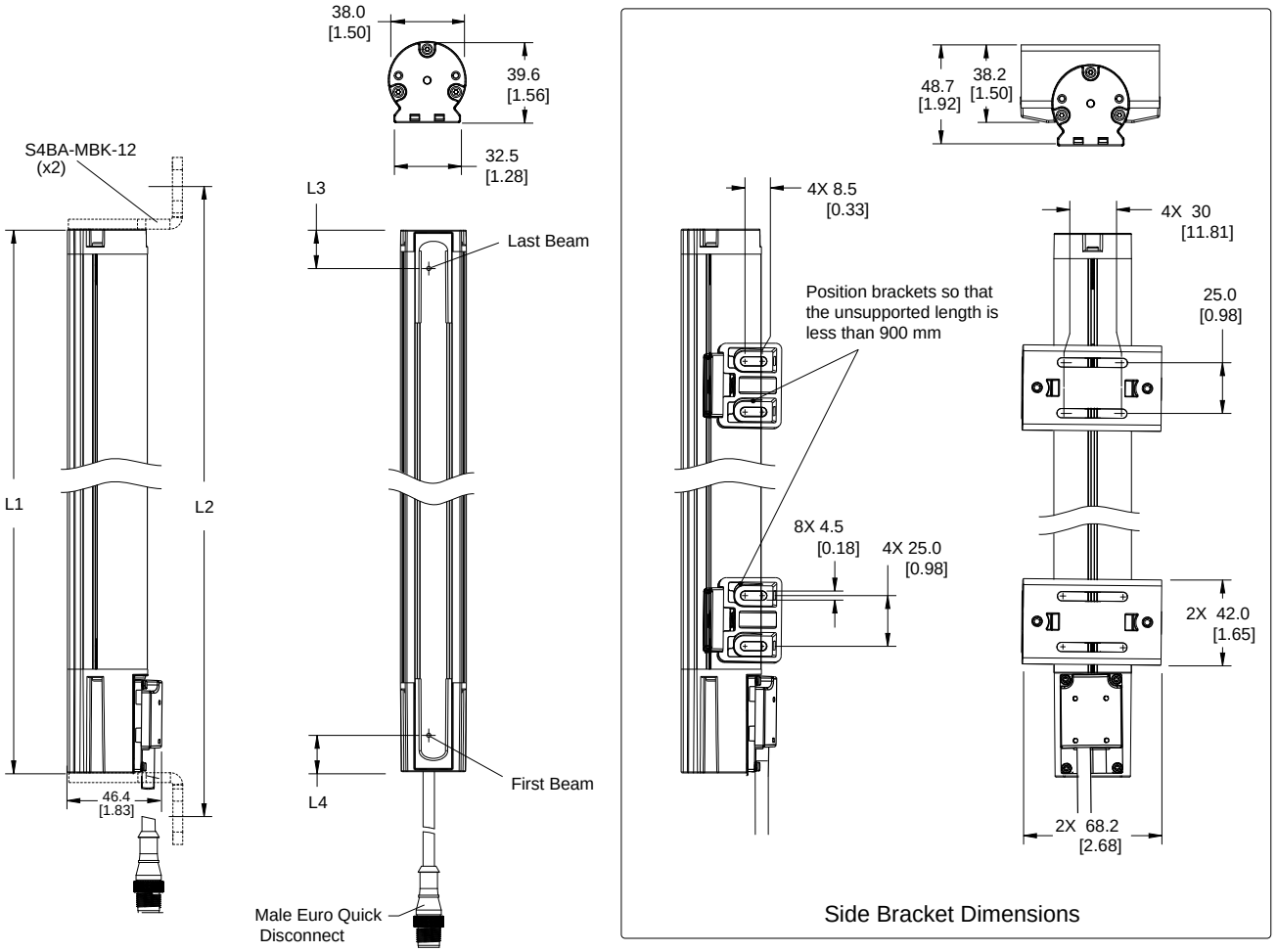

© Banner Engineering Corp. All rights reserved.
www.bannerengineering.com

Emitter/Receiver Model	Housing Length (L1)	Hole to Hole Length with Brackets Out (L2)	Defined Area (mm)
S4B...-300-S	312.03 mm (12.28 in)	345.03 mm (13.58 in)	300
S4B...-450-S	460.73 mm (18.14 in)	493.73 mm (19.44 in)	450
S4B...-600-S	609.98 mm (24.01 in)	642.98 mm (25.31 in)	600
S4B...-750-S	758.68 mm (29.87 in)	791.68 mm (31.17 in)	750
S4B...-900-S	907.93 mm (35.75 in)	940.93 mm (37.04 in)	900
S4B...-1050-S	1056.63 mm (41.6 in)	1089.63 mm (42.90 in)	1050
S4B...-1200-S	1205.88 mm (47.48 in)	1238.88 mm (48.77 in)	1200
S4B...-1350-S	1354.58 mm (53.33 in)	1387.58 mm (54.63 in)	1350
S4B...-1500-S	1503.83 mm (59.21 in)	1536.83 mm (60.51 in)	1500
S4B...-1650-S	1652.53 mm (65.06 in)	1685.53 mm (66.36 in)	1650
S4B...-1800-S	1801.78 mm (70.94 in)	1834.78 mm (72.24 in)	1800

Emitter/Receiver Model	Last Beam Location (L3)	First Beam Location (L4)
30 mm Models	17.4 mm to 20.4 mm (0.69 in. to 0.8 in)	18.9 mm (0.74 in)
14 mm Models	10.4 mm to 12.4 mm (0.41 in. to 0.49 in)	11.4 mm (0.45 in)

3.7 Remote Fixed Blanking Configuration Tool (S4BA-RFB) Dimensions

All measurements are listed in millimeters [inches], unless noted otherwise. The measurements provided are subject to change.



© Banner Engineering Corp. All rights reserved.
www.bannerengineering.com

Chapter 4 Mechanical Installation

The S4B system performance as a safety guarding device depends on:

- The suitability of the application
- The proper mechanical and electrical installation and interfacing to the guarded machine

WARNING:

- **Read this Section Carefully Before Installing the System**
- **Failure to follow these instructions could result in serious injury or death.**
- If all mounting, installation, interfacing, and checkout procedures are not followed properly, this Banner device cannot provide the protection for which it was designed.
- The user is responsible for ensuring that all local, state, and national laws, rules, codes, or regulations relating to the installation and use of this control system in any particular application are satisfied. Ensure that all legal requirements have been met and that all technical installation and maintenance instructions contained in this manual are followed.
- The user has the sole responsibility to ensure that this Banner device is installed and interfaced to the guarded machine by Qualified Persons, in accordance with this manual and applicable safety regulations. A Qualified person is a person who, by possession of a recognized degree or certificate of professional training, or who, by extensive knowledge, training and experience, has successfully demonstrated the ability to solve problems relating to the subject matter and work.

4.1 Mechanical Installation Considerations

The two primary factors that influence the layout of the S4B system mechanical installation are:

- Minimum distance/safety distance (see "Calculating the Safety Distance (Minimum Distance)" on page 22)
- Eliminating pass-through hazard/hazard points via supplemental guarding (see "Reducing or Eliminating Pass-Through Hazards" on page 25)

Other considerations include:

- Emitter and Receiver Orientation (see "Emitter and Receiver Orientation" on page 30)
- Adjacent Reflective Surfaces (see "Adjacent Reflective Surfaces" on page 28)
- Use of Corner Mirrors (see "Use of Corner Mirrors" on page 29)
- Installation of Multiple Systems (see "Installation of Multiple Systems" on page 31)

WARNING:

- **Position the System Components Carefully**
- Failure to observe this warning could result in serious injury or death.
- Position the system components such that the hazard point/hazard cannot be accessed by reaching over, under, around, or through the sensing field. Additional and supplemental guarding may be required.

4.2 Calculating the Safety Distance (Minimum Distance)

The minimum distance required between the defined area and the closest reachable hazard point is the safety distance (D), also called Minimum Distance (S). The distance is calculated so that when an object or a person is detected (by blocking a sensing beam), the S4B sends a stop signal to the machine, causing it to stop by the time the object or person can reach any machine hazard point.

The distance is calculated differently for U.S. and European installations. Both methods take into account several factors, including a calculated human speed, the total system stopping time (which itself has several components), and the depth penetration factor. After the distance has been determined, record the calculated distance on the Daily Checkout Card.

© Banner Engineering Corp. All rights reserved.
www.bannerengineering.com

WARNING:

- **Calculate the Safety Distance (Minimum Distance)**
- Failure to establish and maintain the safety distance (minimum distance) could result in serious injury or death.
- Mount the components at a distance from the nearest hazard such that an individual cannot reach the hazard before cessation of the hazardous motion or situation. Calculate this distance using the supplied formulas, as described by ANSI B11.19 and ISO 13855. Mount the components more than 100 mm (4 in) away from the hazard, regardless of the calculated value.

WARNING:

- Reduced resolution increases dds (or DDS) and thus the Safety Distance
- Failure to establish and maintain this increased safety distance (minimum distance) could result in serious injury or death.
- Increase the reaching distance associated with devices to calculate proper minimum distance when using a reduced resolution configuration. (Always turn reduced resolution off when the larger minimum object detection size is not required.

Figure 6. Safety distance (minimum distance) and hard (fixed) guarding

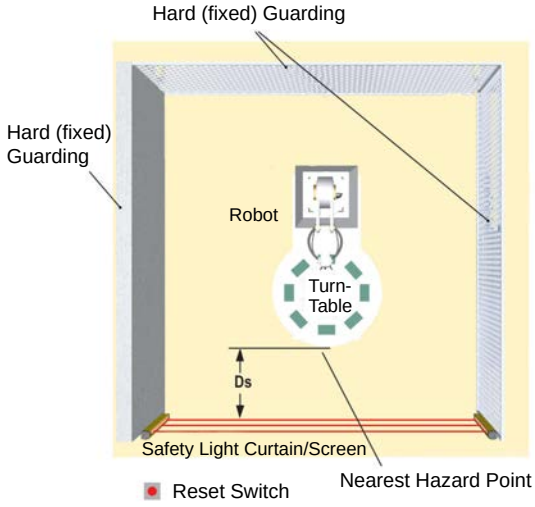

4.2.1 Safety Distance U.S. Formula and Definitions

The Safety Distance formula, as provided in ANSI B11.19-2019:

$$D = (K \times T) + d_{ds} + Z$$

D

The Safety Distance of a device in inches or mm.

K

The maximum speed that an individual can approach the hazard.

63 in/sec or 1600 mm/sec as recommended by OSHA 29CFR1910.217 and ANSI B11.19. Various studies indicate speeds of 1600 mm/sec (63 in/sec) to more than 2500 mm/sec (100 in/sec), however, the studies are not conclusive determinations. Consider all factors, including the physical ability of operators, when determining the value of K to be used.

© Banner Engineering Corp. All rights reserved.
www.bannerengineering.com

T

The total time to achieve a safe condition (seconds).

The total time is the total of the following five components:

T_d = the reaction time of each device
T_i = the reaction time of the device interface(s)
T_c = the reaction time of control system
T_s = the reaction time of the machine
T_{scm} = the time associated with stopping-performance monitoring (safe-condition monitoring system)

d_{ds}

The reaching distance associated with devices (inches or mm).

Z

Supplemental distance factors (inches or mm). For example, measurement errors, reflection-based measurement errors, lack of ground clearance of moving equipment, or decreasing braking torque of moving equipment.

4.2.2 Minimum Distance European Formula and Definitions

The Minimum Distance formula, as provided in EN ISO 13855:2024:

$$S = (K \times T) + D_{DS} + Z$$

S

The separation distance in mm (not less than 100 mm)

K

The approach speed in mm/s (approach speeds of body or part of the body as stated in ISO 13855)

- 2000 mm/s for the speed of upper limbs
- 1600 mm/s for walking

T

The overall system response time in seconds

D_{DS}

Supplements the reaching distance associated with a protective device (mm)

Z

The application-dependent supplemental distance factor (mm), such as for measurement uncertainty, brake wear, reflection, etc.

Reaching Distance Associated with Devices

Reduced Resolution	Reaching Distance (D_{ds})	
	14 mm Systems	30 mm Systems
OFF	24 mm (0.94 in)	78 mm (3.1 in)
ON	58 mm (2.3 in)	180 mm (7 in)

4.2.3 Examples

4.2.4 U.S. Applications, Model S4BR30-600-S

K = 63 inches per second (the hand speed constant set by OSHA)

T = 0.32 (0.250 seconds is specified by the machine manufacturer; plus 20% safety factor; plus 0.013 seconds for XS26-2 Safety Controller response time, plus 0.010 seconds (the specified response time of a S4BR30-600-S System))

D_{ds} = 3.1 inches (30 mm resolution)

Z = 0 inches (supplemental distance factors)

Continued on page 25

© Banner Engineering Corp. All rights reserved.
www.bannerengineering.com

Continued from page 24

Substitute the numbers into the formula as follows:

$$D = (K \times T) + d_{ds} + Z$$

D = (63 × 0.32) + 3.1 + 0 = 23.26 in

Mount the S4B emitter and receiver so that no part of the defined area will be closer than 23.3 inches to the closest reachable hazard point on the guarded machine.

4.2.5 European Applications, Model S4BR30-600-S

K = 1600 mm per second

T = 0.32 (0.250 seconds specified by machine manufacturer; plus 20% safety factor; plus 0.013 seconds XS26-2 Safety Controller response time), plus 0.010 seconds (the specified response time of a S4BR30-600-S System)

D_{DS} = 8 × (30 – 14) = 128 mm (30 mm resolution)

Z = 0 mm

Substitute the numbers into the formula as follows:

$$S = (K \times T) + D_{DS} + Z$$

S = (1600 × 0.32) + 128 + 0 = 640 mm

Mount the S4B emitter and receiver so that no part of the defined area will be closer than 640 mm to the closest reachable hazard point on the guarded machine.

4.3 Reducing or Eliminating Pass-Through Hazards

A pass-through hazard is associated with applications where personnel may pass through a safeguard, such as the EZ-SCREEN® S4B Safety Light Curtain (which issues a stop command to remove the hazard), and then continues into the guarded area. This is common in access and perimeter guarding applications. Subsequently, their presence is no longer detected, and the related danger becomes the unexpected start or restart of the machine while personnel are within the guarded area.

In the use of light curtains, a pass-through hazard typically results from large safety distances calculated from long stopping times, large minimum object sensitivities, reach-over, reach-through, or other installation considerations. A pass-through hazard can be generated with as little as 75 mm (3 in) between the sensing field and the machine frame or hard (fixed) guarding.

Eliminate or reduce pass-through hazards whenever possible. While it is recommended to eliminate the pass-through hazard altogether, this may not be possible due to machine layout, machine capabilities, or other application considerations.

One solution is to ensure that personnel are continually sensed while within the hazardous area. This can be accomplished by using supplemental safeguarding, such as described by the safety requirements in ANSI B11.19 or other appropriate standards.

An alternative method is to ensure that after the safeguarding device is tripped, the corresponding safety monitoring device latches and requires a deliberate manual action to reset. This method of safeguarding relies upon the location of the reset switch as well as safe work practices and procedures to prevent an unexpected start or restart of the guarded machine. The EZ-SCREEN® S4B Safety Light Curtain does not provide a configurable manual start/restart (latch) function. For these applications, this function must be implemented in the external safety monitoring device.

© Banner Engineering Corp. All rights reserved.
www.bannerengineering.com

WARNING:

- **Use of the Banner device for Access or Perimeter Guarding**
- Failure to observe this warning could result in serious injury or death.
- If a Banner device is installed in an application that results in a pass-through hazard (for example, perimeter guarding), either the Banner device System or the Machine Primary Control Elements (MPCEs) of the guarded machine must cause a Latched (manual reset) response following an interruption of the defined area. The reset of this Latched (manual reset) condition may only be achieved by actuating a reset switch that is separate from the normal means of machine cycle initiation. Lockout/Tagout procedures per ANSI Z244.1 may be required, or additional safeguarding, as described by ANSI B11.19 safety requirements or other appropriate standards, must be used if a passthrough hazard can not be eliminated or reduced to an acceptable level of risk.

4.4 Supplemental Safeguarding

As described in Calculating the Safety Distance (Minimum Distance), position the S4B such that an individual cannot reach through the defined area and access the hazard point before the machine has stopped.

Additionally, the hazard cannot be accessible by reaching around, under, or over the defined area. To accomplish this, supplemental guarding (mechanical barriers, such as screens or bars), as described by ANSI B11.19 safety requirements or other appropriate standards, must be installed. Access will then be possible only through the defined area of the S4B System or through other safeguarding that prevents access to the hazard.

The mechanical barriers used for this purpose are typically called "hard (fixed) guarding"; there must be no gaps between the hard (fixed) guarding and the defined area. Any openings in the hard (fixed) guarding must comply with the safe opening requirements of ANSI B11.19 or other appropriate standard.

Figure 7. An example of supplemental safeguarding

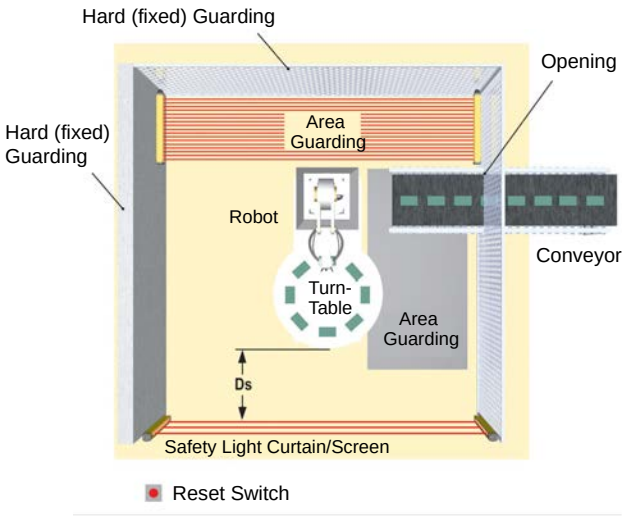

"Figure: An example of supplemental safeguarding" on page 26 shows an example of supplemental safeguarding inside a robotic work cell. The S4B, in conjunction with the hard (fixed) guarding, is the primary safeguard. Supplemental safeguarding (such as a horizontal-mounted safety light curtain as an area guard) is required in areas that cannot be viewed from the reset switch (for example, behind the robot and the conveyor). Additional supplemental safeguarding may be required to prevent clearance or trapping hazards (for example, a safety mat as an area guard between the robot, the turntable, and the conveyor).

WARNING:

- **The hazard must be accessible only through the sensing field**
- Incorrect system installation could result in serious injury or death.
- The installation of the S4B must prevent any individual from reaching around, under, over or through the defined area and into the hazard without being detected.
- See OSHA CFR 1910.217, ANSI B11.19, and/or ISO 14119, ISO 14120 and ISO 13857 for information on determining safety distances and safe opening sizes for your guarding device. Mechanical barriers (for example, hard (fixed) guarding) or supplemental safeguarding might be required to comply with these requirements.

© Banner Engineering Corp. All rights reserved.
www.bannerengineering.com

4.5 Reset Switch Location

The S4B has a trip output (automatic power-up and automatic reset) that turns the OSSD outputs ON when the defined area is unobstructed (clear). Per application requirements, a latch response requiring a manual reset to a power-up condition or after an interruption has cleared the defined area might be required. The latch function can be provided by interfacing the S4B OSSD outputs to the machine's safety-related control system, a safety controller (such as SC10-2roe or XS/SC26-2), or safety module (such as the UM-FA-9A/11A).

The system or device providing the latch/reset function must conform to the level of performance required by the risk assessment. In applications requiring Control Reliability and/or ISO 13849-1:2015 Categories 3 or 4 and PL d or e, it is recommended that a monitored manual reset (for example, open-closed-open action), such that a shorted or tied-down button cannot cause a reset, be used.

The reset switch must be mounted at a location that complies with the warning and guidelines below. If any hazardous areas are not in view from the switch location, additional means of safeguarding must be provided. The switch should be protected from accidental or unintended actuation (for example, through the use of rings or guards).

A key-actuated reset switch provides some operator or supervisory control, as the key can be removed from the switch and taken into the guarded area. However, this does not prevent unauthorized or inadvertent resets due to spare keys in the possession of others, or additional personnel entering the guarded area unnoticed. When considering where to locate the reset switch, follow the guidelines below.



WARNING:

- **Install reset switches properly**
- Failure to properly install reset switches could result in serious injury or death.
- Install reset switches so that they are accessible only from outside, and in full view of, the safeguarded space. Reset switches cannot be accessible from within the safeguarded space. Protect reset switches against unauthorized or inadvertent operation (for example, through the use of rings or guards). If there are any hazardous areas that are not visible from the reset switches, provide additional safeguarding.

All reset switches must be:

- Outside the guarded area
- Located to allow the switch operator a full, unobstructed, view of the entire guarded area while the reset is performed
- Out of reach from within the guarded area
- Protected against unauthorized or inadvertent operation (such as through the use of rings or guards)

IMPORTANT: Resetting a safeguard must not initiate hazardous motion. Safe work procedures require a start-up procedure to be followed and the individual performing the reset to verify that the entire hazardous area is clear of all personnel before each reset of the safeguard is performed. If any area cannot be observed from the reset switch location, additional supplemental safeguarding must be used: at a minimum, visual and audible warnings of machine start-up.

© Banner Engineering Corp. All rights reserved.
www.bannerengineering.com

4.6 Other Considerations

4.6.1 Adjacent Reflective Surfaces

A reflective surface located adjacent to the defined area may deflect one or more beams around an object in the defined area. In the worst case, an optical short circuit may occur, allowing an object to pass undetected through the defined area.

WARNING:

- **Do not install the system near reflective surfaces**
- Reflective surfaces could reflect the sensing beam(s) around an object or person within the defined area, preventing detection by the system. Failure to prevent reflection problems results in incomplete guarding and an optical short circuit that could result in serious injury or death.
- Do not locate the defined area near a reflective surface. Perform the trip test, as described in the product documentation, to detect such reflection(s).

This reflective surface may result from shiny surfaces or glossy paint on the machine, the workpiece, the work surface, the floor, or the walls. Beams deflected by reflective surfaces are discovered by performing the trip test and the periodic checkout procedures. To eliminate problem reflections:

- If possible, relocate the sensors to move the beams away from the reflective surface(s) (see "Figure: Adjacent Reflective Surfaces" on page 28), being careful to maintain adequate Safety Distance (Minimum Distance)
- Otherwise, if possible, paint, mask, or roughen the shiny surface to reduce its reflectivity
- Where these are not possible (as with a shiny workpiece or machine frame), determine the worst-case resolution (see "Figure: Determining Worst-Case Resolution With Larger Test Piece" on page 28) resulting from the optical short circuit and use the corresponding depth penetration factor (D_{pf} or C) in the Safety Distance (Minimum Distance) formula (see "Calculating the Safety Distance (Minimum Distance)" on page 22); or mount the sensors in such a way that the receiver's field of view and/or the emitter's spread of light are restricted from the reflective surface
- Repeat the trip test (see "Conduct a Trip Test" on page 46) to verify these changes have eliminated the problem reflection(s). If the workpiece is especially reflective and comes close to the defined area, perform the trip test with the workpiece in place

Figure 8. Adjacent Reflective Surfaces

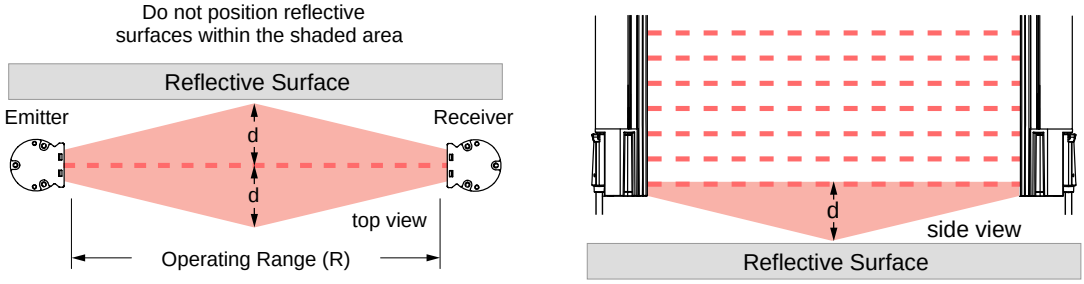

Operating range 0.1 m to 3 m (4 in to 10 ft): d = 0.13 m (5 in)

Operating range > 3 m (>10 ft): d = 0.0437 × R (m or ft)

Figure 9. Determining Worst-Case Resolution With Larger Test Piece

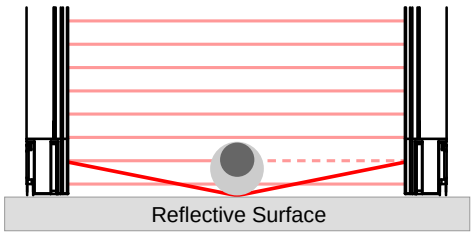

© Banner Engineering Corp. All rights reserved.
www.bannerengineering.com

If an optical short circuit exists due to a reflective adjacent surface, a test piece (represented by the dark gray circle) with the specified system resolution will not cause a blocked condition. In this situation, during the trip test, the Zone indicators and Status indicator will be green and the OSSDs will be on.

To determine the worst-case resolution, select larger test pieces (represented by the light gray circle) and perform a trip test. The midpoint between the emitter and receiver may cause the most optical short circuits. The test piece that passes the trip test determines the worst-case resolution for this installation. Use the table below to calculate a new depth penetration factor D_{pf} or Factor "C".

Test Piece Model	Resolution	Reaching Distance (d_{ds}) for U.S. Applications	D_{DS} for European Applications
STP-13	14 mm	24 mm (1 in)	0 mm
STP-2	19 mm	41 mm (1.6 in)	40 mm (1.6 in)
STP-21	24 mm	58 mm (2.3 in)	80 mm (3.1 in)
STP-16	25 mm	61 mm (2.5 in)	88 mm (3.5 in)
STP-14	30 mm	78 mm (3.1 in)	128 mm (5 in)
STP-4	32 mm	85 mm (3.3 in)	144 mm (5.7 in)
STP-17	34 mm	92 mm (3.6 in)	160 mm (6.3 in)
STP-1	38 mm	106 mm (4.2 in)	192 mm (7.6 in)
STP-3	45 mm	129 mm (5 in)	850 mm (33.5 in)
STP-8	51 mm	150 mm (5.9 in)	850 mm (33.5 in)
STP-5	58 mm	173 mm (6.8 in)	850 mm (33.5 in)
STP-15	60 mm	180 mm (7 in)	850 mm (33.5 in)
STP-12	62 mm	187 mm (7.4 in)	850 mm (33.5 in)

4.6.2 Use of Corner Mirrors

S4B may be used with one or more corner mirrors. Mirrors are not allowed for applications that would allow undetected personnel access into the safeguarded area.

The use of glass-surface corner mirrors reduces the maximum specified emitter/receiver separation by approximately 8 percent per mirror, as follows:

Table 12. Light Curtain Maximum Range

Light Curtain Series	0 Mirrors	1 Mirror	2 Mirrors	3 Mirrors	4 Mirrors
SLC4 Safety Light Curtain	2 m (6.6 ft)	1.8 m (5.9 ft)	1.6 m (5.2 ft)	1.5 m (4.9 ft)	1.4 m (4.6 ft)
EZ-SCREEN® LP Basic (SLPVA)	4 m (13 ft)	3.7 m (12.1 ft)	3.4 m (11.2 ft)	3.1 ft m (10.3 ft)	2.8 m (9.2 ft)
14 mm EZ-SCREEN® (SLS)	6 m (20 ft)	5.6 m (18.4 ft)	5.2 m (17.0 ft)	4.8 m (15.7 ft)	4.4 m (14.5 ft)
EZ-SCREEN® LP (SLP)	7 m (23 ft)	6.5 m (21.2 ft)	6.0 m (19.5 ft)	5.5 m (18.0 ft)	5.1 m (16.6 ft)
EZ-SCREEN® LS Basic (SLLV)	8 m (26.2 ft)	7.4 m (24.3 ft)	6.8 m (22.3 ft)	6.2 m (20.3 ft)	5.7 m (18.7 ft)
EZ-SCREEN® LS (SLL)	12 m (39 ft)	11 m (36 ft)	10.1 m (33 ft)	9.3 m (30.5 ft)	8.6 m (28 ft)
S4B Safety Light Curtain	12 m (39 ft)	11 m (36 ft)	10.1 m (33 ft)	9.3 m (30.5 ft)	8.6 m (28 ft)
EZ-SCREEN® Type 2 (LS2)	15 m (50 ft)	13.8 m (45 ft)	12.7 m (42 ft)	11.7 m (38 ft)	10.8 m (35 ft)
30 mm EZ-SCREEN® (SLS)	18 m (60 ft)	16.8 m (55 ft)	15.5 m (51 ft)	14.3 m (47 ft)	13.1 m (43 ft)

See the specific mirror datasheet or www.bannerengineering.com for more information.

If mirrors are used, the difference between the angle of incidence from the emitter to the mirror and from the mirror to the receiver must be between 45° and 120°. If placed at a sharper angle, an object in the light curtain may deflect beam(s) to the receiver, preventing the object from being detected, also know as false proxing. Angles greater than 120° result in difficult alignment and possible optical short circuits.

WARNING:

- **Retroreflective Mode Installation**
- Failure to follow these instructions may create unreliable sensing and may result in serious injury or death.
- Do not install emitters and receivers in retroreflective mode with less than a 45° angle of incidence. Install emitters and receivers at an appropriate angle.

© Banner Engineering Corp. All rights reserved.
www.bannerengineering.com

Figure 10. Using S4B sensors in a retroreflective mode

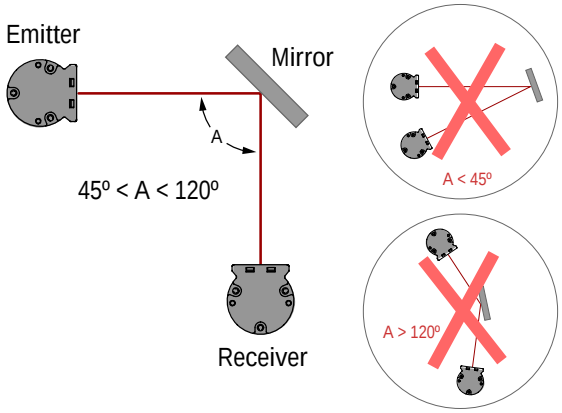

4.6.3 Emitter and Receiver Orientation

The emitter and receiver must be mounted parallel to each other and aligned in a common plane, with both machine interface cable ends pointing in the same direction.

Never mount the emitter with its machine interface cable end oriented in the opposite direction of the cable end of the receiver. If this occurs, voids in the light curtain may allow objects or personnel to pass through the defined area undetected.

The emitter and receiver may be oriented in a vertical or horizontal plane, or at any angle between horizontal and vertical, as long as they are parallel to each other and their cable ends point in the same direction. Verify that the light curtain completely covers all access to the hazard point that is not already protected by hard (fixed) guard or other supplemental guarding.

WARNING:

- **Properly install system components**
- Incorrectly orienting the system components impairs the performance of the system and results in incomplete guarding, which can result in serious injury or death.
- Install the system components with their corresponding cable ends pointing in the same direction.

Figure 11. Examples of Correct Emitter/Receiver Orientation

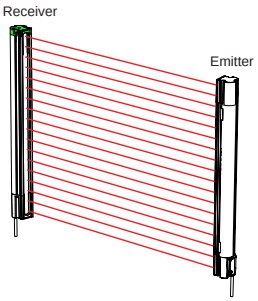

Both cable ends down

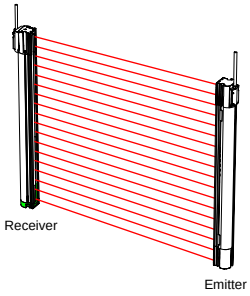

Both cable ends up

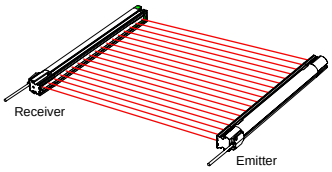

Orientation parallel to floor with both cable ends pointing in the same direction

© Banner Engineering Corp. All rights reserved.
www.bannerengineering.com

Figure 12. Examples of Incorrect Emitter/Receiver Orientation

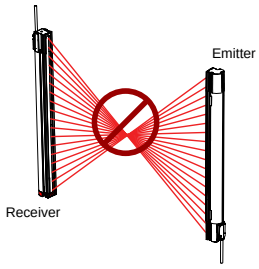

Cable ends point in opposite directions

Problem: Voids in defined area

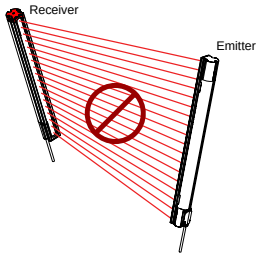

Emitter and receiver not parallel to each other

Problem: Reduced excess gain

4.6.4 Installation of Multiple Systems

Whenever two or more S4B emitter and receiver pairs are adjacent to one another, optical crosstalk may take place between the systems.

To minimize optical crosstalk, alternate the positions of the emitters and receivers as shown in "Figure: Installation of Multiple Systems" on page 32, or alternate scan codes.

When three or more systems are installed in the same plane, optical crosstalk may occur between sensor pairs whose emitter and receiver lenses are oriented in the same direction. In this situation, eliminate optical crosstalk by mounting these sensor pairs exactly in line with each other within one plane, or by adding a mechanical barrier between the pairs as shown in "Figure: Installation of Multiple Systems" on page 32.

Figure 13. Optical Crosstalk

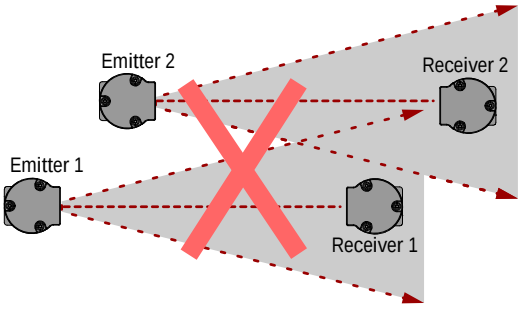

WARNING:

- **Adjacent components can synchronize incorrectly**
- The light curtain's safety function is reduced when components are not synchronized correctly, creating an unsafe condition that could result in serious injury or death.
- When multiple systems are mounted closely together, or where a secondary emitter is in view (within ±5°) and within range of an adjacent receiver, a receiver can synchronize to the signal from the wrong emitter, reducing the safety function of the light curtain.

To further aid in avoiding crosstalk, the sensors feature two selectable scan codes. A receiver set to one scan code will not respond to an emitter set to another code. The emitter and receiver within a system must be set to the same scan code.

Scan codes are set via the switches in the RD cordsets on the emitters and receivers. See "Scan Code Selection" on page 38 for the switch settings.

© Banner Engineering Corp. All rights reserved.
www.bannerengineering.com

Figure 14. Installation of Multiple Systems

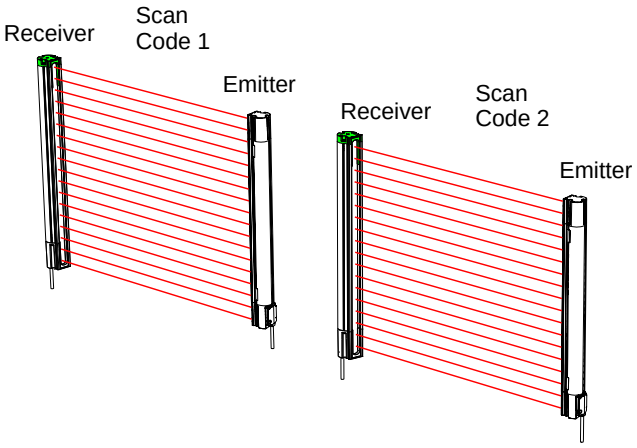

Two systems in a horizontal plane

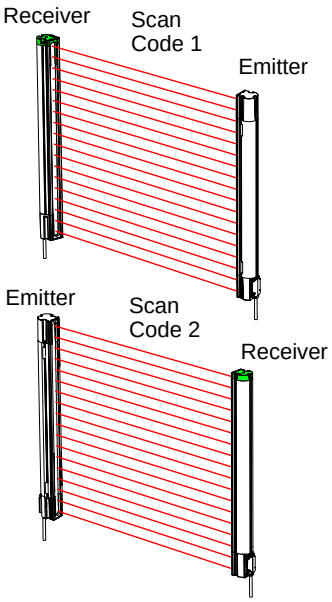

Two or three systems stacked (or alternate receiver/emitter positions)

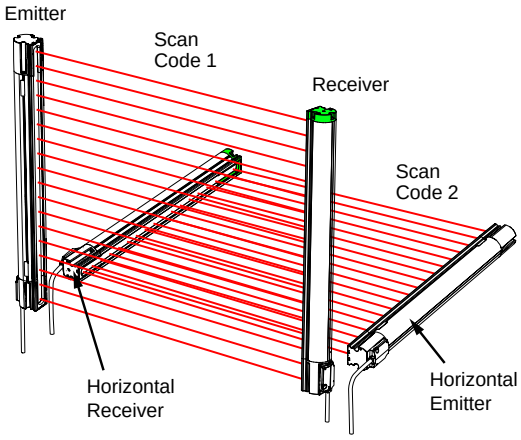

Two systems at right angles

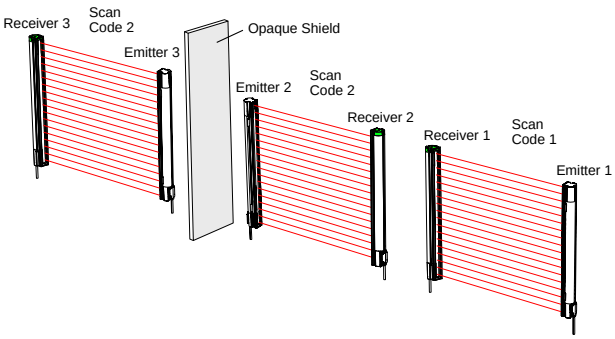

Multiple systems in a plane

WARNING:

- **Properly connect multiple pairs of sensors**
- Connecting multiple output signal switching devices (OSSD) safety outputs to one interface module or otherwise parallel OSSD outputs can result in serious bodily injury or death, and is prohibited.
- Do not connect multiple pairs of sensors to a single device.

WARNING:

- **Use different scan codes**
- If you do not use different scan codes, a receiver can synchronize to the signal from the wrong emitter, reducing the safety function of the light curtain and creating an unsafe condition that could result in serious injury or death.
- Configure adjacent systems to use different scan codes (for example, set one system to use scan code 1 and the other system to use scan code 2). Perform a trip test to confirm the light curtain function.

© Banner Engineering Corp. All rights reserved.
www.bannerengineering.com

4.7 Mounting System Components

4.7.1 Mounting Hardware

After the mechanical layout considerations are addressed, mount the sensors and route the cables.

All brackets are ordered separately; no brackets are shipped with the sensors. The quantity of brackets ordered and the placement of those brackets must ensure the unsupported distance (distance between brackets) is less than 900 mm (35.4 in).

Mounting the S4BA-MBK-16 Side-Mount Bracket

The S4BA-MBK-16 brackets are ordered separately. Two brackets are included in each bracket kit.

Figure 15. Side-Mount Bracket

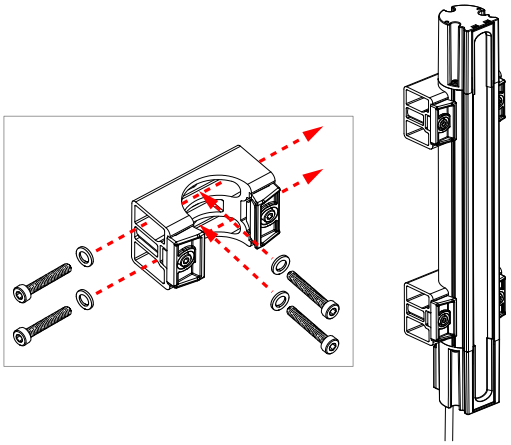

- See "Sensor Mounting and Mechanical Alignment Verification" on page 36 for additional mounting recommendations
- The machine interface connector ends of both sensors must point in the same direction
- The sensors are designed to be mounted with up to 900 mm (35.4 in) of unsupported distance between brackets when they are subject to shock or vibration
- See "Brackets" on page 92 for mounting bracket dimensions
- The M4 bolts, washers, and nuts are user-supplied

NOTE: It is best to place brackets near the ends of each sensor (not on end caps). Add additional brackets per sensor as needed to meet 900 mm unsupported distance requirement. This means that 300 mm to 900 mm sensors can use two brackets per sensor, while 1050 mm to 1800 mm sensors should use three brackets per sensor.

NOTE: Use washers under the screw heads to minimize bracket damage.

1. From a common point of reference (ensuring the calculated minimum safety distance), measure to position the emitter and receiver in the same plane, with their midpoints directly opposite each other.

   The connector ends of both sensors must point in the same direction (see "Emitter and Receiver Orientation" on page 30).
2. Mount the emitter and receiver side brackets to the desired surface with user-supplied M4 bolts, washers, and nuts. Tighten to 2.15 N·m (19 in·lbs).
3. Loosen the M4 clamp screws on the side brackets enough to easily insert a sensor.
4. Insert each sensor in to its respective brackets with the front window facing out of the opening in the front of the bracket.

   NOTE: The sensors need to lightly snap into the brackets. If the sensors will not install easily, loosen the M4 clamp screws to allow the clamps to slide out of the way of the sensor.
5. Position the emitter and receiver windows directly facing each other.
6. Measure from a reference plane, for example, a level building floor, to the same point(s) on the emitter and receiver to verify their mechanical alignment. Use a carpenter's level, a plumb bob, or the optional LAT-1 Laser Alignment Tool (see "Alignment Aids" on page 98) or check the diagonal distances between the sensors, to achieve mechanical alignment. See "Sensor Mounting and Mechanical Alignment Verification" on page 36.

© Banner Engineering Corp. All rights reserved.
www.bannerengineering.com

7. Temporarily tighten all fasteners that allow for adjustment. Final alignment procedures are explained in "Initial Checkout Procedure" on page 42.
8. After the emitter and receiver alignment is completed, tighten the bracket front M4 clamp screws to 2.15 N·m (19 in·lbs).

> **NOTE:** Each bracket has two clamp screws. Both clamp screws on every bracket need to be fully tightened to provide sufficient strength to hold the sensor. Do not reposition the sensor when the clamps are mostly or fully tightened. Doing so could damage clamp pads.

Mounting the S4BA-MBK-11 End-Mount Brackets

The S4BA-MBK-11 brackets are ordered separately. Two brackets are included in each bracket kit.

> **NOTE:** The S4BA-MBK-11 end mount brackets can be used only with FID 3 or older S4B sensors.

Figure 16. End-Mount Brackets

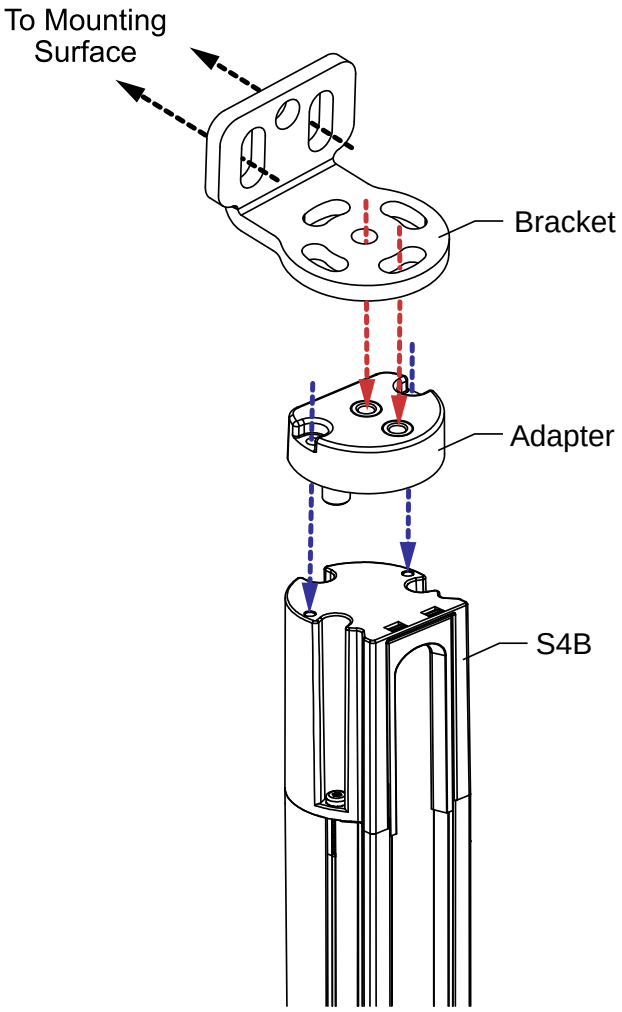

- See "Sensor Mounting and Mechanical Alignment Verification" on page 36 for additional mounting recommendations
- The machine interface connector ends of both sensors must point in the same direction
- Two brackets and two bracket adapters are included in each S4BA-MBK-11 kit. Additional S4BA-MBK-16 side mount bracket(s) may be required (see "Mounting the S4BA-MBK-16 Side-Mount Bracket" on page 33 and "Accessories" on page 91 for mounting kit options)
- The sensors are designed to be mounted with up to 900 mm (35.4 in) of unsupported distance between brackets when they are subject to shock or vibration
- The hardware needed to mount the bracket to the mounting surface is user-supplied
- The hardware to mount the bracket adapter and the bracket to the sensor is supplied with the kit

> **IMPORTANT:** The brackets are designed to face out from the S4B sensor.

1. Attach an adapter to each end of the sensor using the supplied M3 washers and screws. Tighten to 8 in-lbs.
2. Attach a bracket to each adapter using the supplied M5 screws. Loosely tighten the screws at this time.
3. From a common point of reference (ensuring the calculated minimum safety distance), measure to position the emitter and receiver in the same plane, with their midpoints directly opposite each other. Locate and drill mounting holes, if necessary.

© Banner Engineering Corp. All rights reserved.
www.bannerengineering.com

4. Position the emitter and receiver in their brackets, as shown in "Emitter and Receiver Orientation" on page 30. Loosely attach the brackets to the mounting surface.
5. Verify that the sensor windows directly face each other. Measure from a reference plane, for example, a level building floor, to the same point(s) on the emitter and receiver to verify their mechanical alignment. Use a carpenter's level, a plumb bob, or the optional LAT-1 Laser Alignment Tool (see "Alignment Aids" on page 98) or check the diagonal distances between the sensors, to achieve mechanical alignment. Final alignment procedures are explained in "Initial Checkout Procedure" on page 42.
6. After the emitter and receiver alignment is completed, tighten the screws connecting the brackets to the adapter. Tighten to 36 in-lbs.
7. Tighten the fasteners holding the bracket to the mounting surface.

Mounting the S4BA-MBK-12 End-Mount Brackets-S4B

The S4BA-MBK-12 brackets are ordered separately. Two brackets are included in each bracket kit.

NOTE: The S4BA-MBK-12 End Mount Brackets can be used only with FID4 or later S4B sensors.

Figure 17. S4BA-MBK-12 End-Mount Brackets

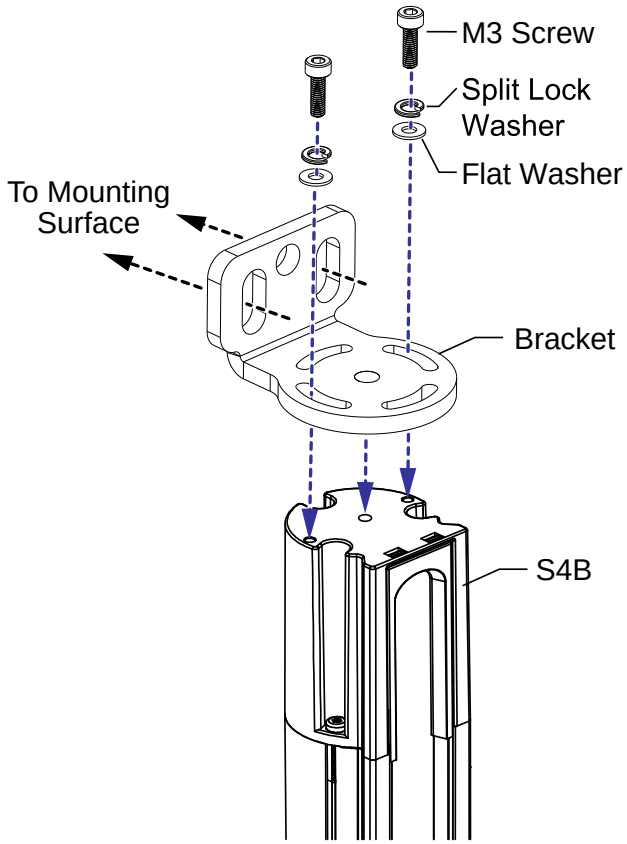

- See "Sensor Mounting and Mechanical Alignment Verification" on page 36 for additional mounting recommendations
- The machine interface connector ends of both sensors must point in the same direction
- Two brackets are included in each S4BA-MBK-12 kit. Additional S4BA-MBK-16 side mount bracket(s) may be required (see "Mounting the S4BA-MBK-16 Side-Mount Bracket" on page 33 and "Accessories" on page 91 for mounting kit options)
- The sensors are designed to be mounted with up to 900 mm (35.4 in) of unsupported distance between brackets when they are subject to shock or vibration
- The hardware needed to mount the bracket to the mounting surface is user-supplied
- The hardware to mount the bracket to the sensor is supplied with the kit

IMPORTANT: The brackets are designed to face out from the S4B sensor.

1. Attach a bracket to each end of a sensor.
    a. Insert the pin in the bracket into the hole in the sensor end cap.
    b. Secure the bracket using the supplied flat washers, split lock washers, and M3 screws. Place the split lock washer on the screw first, followed by the flat washer, and then the bracket. See "Figure: S4BA-MBK-12 End-Mount Brackets" on page 35.
    c. Loosely tighten the screws at this time.
2. From a common point of reference (ensuring the calculated minimum safety distance), measure to position the emitter and receiver in the same plane, with their midpoints directly opposite each other. Locate and drill mounting holes, if necessary.
3. Position the emitter and receiver in their brackets, as shown in "Emitter and Receiver Orientation" on page 30. Loosely attach the brackets to the mounting surface.

© Banner Engineering Corp. All rights reserved.
www.bannerengineering.com

4. Verify that the sensor windows directly face each other. Measure from a reference plane, for example, a level building floor, to the same point(s) on the emitter and receiver to verify their mechanical alignment. Use a carpenter's level, a plumb bob, or the optional LAT-1 Laser Alignment Tool (see "Alignment Aids" on page 98) or check the diagonal distances between the sensors, to achieve mechanical alignment. Final alignment procedures are explained in "Initial Checkout Procedure" on page 42.
5. After the emitter and receiver alignment is completed, tighten the screws connecting the brackets to the sensor. Tighten to 9 in-lbs.

   NOTE: Do not overtighten the screws. Overtightening the screws could result in damage to the end caps.

6. Tighten the fasteners holding the bracket to the mounting surface.

4.7.2 Sensor Mounting and Mechanical Alignment Verification

Verify that:

- The emitter and receiver are directly opposite each other
- Nothing is interrupting the defined area
- The defined area is the same distance from a common reference plane for each sensor
- The emitter and receiver are in the same plane and are level/plumb and square to each other (vertical, horizontal, or inclined at the same angle, and not tilted front-to-back or side-to-side)

Figure 18. Incorrect Sensor Alignment

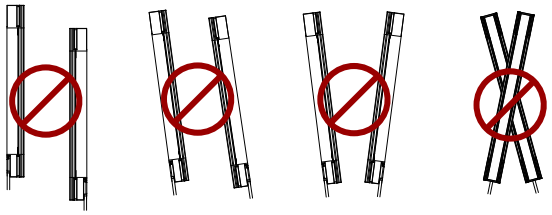

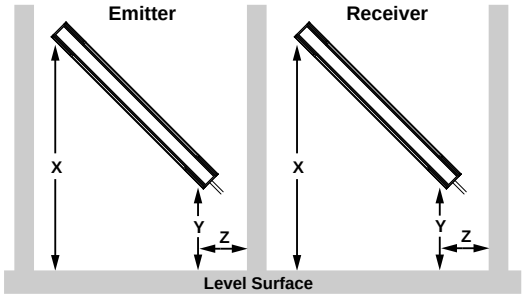

Angled or Horizontal Installations – verify that:

- Distance X at the emitter and receiver are equal
- Distance Y at the emitter and receiver are equal
- Distance Z at the emitter and receiver are equal from parallel surfaces
- Vertical face (the window) is level/plumb
- Defined area is square. Check diagonal measurements if possible; see Vertical Installations, on the right.

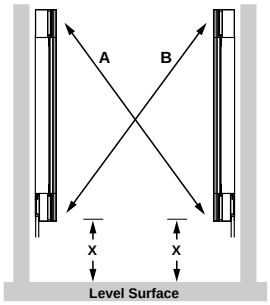

Vertical Installations – verify that:

- Distance X at the emitter and receiver are equal
- Both sensors are level/plumb (check both the side and face)
- Defined area is square. Check diagonal measurements if possible (Diagonal A = Diagonal B).

4.7.3 Mounting the S4BA-RFB

Mounting the S4BA-RFB, remote fixed blanking configuration tool, is optional.

All mounting hardware is user-supplied. The following is needed:

- M6 screws, quantity 2

1. Determine where to mount the S4BA-RFB.

   The S4BA-RFB must be:
   - Located outside the guarded area
   - Located to allow the switch operator full unobstructed view of the entire defined area

© Banner Engineering Corp. All rights reserved.
www.bannerengineering.com

- Protected against unauthorized or inadvertent operation

2. Insert the two M6 screws and tighten to a max torque of 3.4 N·m (30.1 lbf·in).

© Banner Engineering Corp. All rights reserved.

Chapter 5 Electrical Installation and Testing

The following are the main steps to electrically install the S4B components and interface with the guarded machine.

WARNING:

- **Read this Section Carefully Before Installing the System**
- **Failure to follow these instructions could result in serious injury or death.**
- If all mounting, installation, interfacing, and checkout procedures are not followed properly, this Banner device cannot provide the protection for which it was designed.
- The user is responsible for ensuring that all local, state, and national laws, rules, codes, or regulations relating to the installation and use of this control system in any particular application are satisfied. Ensure that all legal requirements have been met and that all technical installation and maintenance instructions contained in this manual are followed.
- The user has the sole responsibility to ensure that this Banner device is installed and interfaced to the guarded machine by Qualified Persons, in accordance with this manual and applicable safety regulations. A Qualified person is a person who, by possession of a recognized degree or certificate of professional training, or who, by extensive knowledge, training and experience, has successfully demonstrated the ability to solve problems relating to the subject matter and work.

1. Routing cordsets and making initial electrical connections (see "Routing Cordsets" on page 38 and "Initial Electrical Connections" on page 42).
2. Apply power to each emitter/receiver pair (see "Initial Electrical Connections" on page 42).
3. Perform an Initial Checkout Procedure (see "Initial Checkout Procedure" on page 42).
4. Make all electrical interface connections to the guarded machine (see "Electrical Connections to the Guarded Machine" on page 53).
5. Perform a Commissioning Checkout Procedure (see "Commissioning Checkout" on page 58).

5.1 Routing Cordsets

Attach the required cordsets to the sensors, and route the sensor cables to the junction box, electrical panel, or other enclosure in which the other safety-related parts of the control system are located. This must be done per local wiring code for low-voltage DC control cables and may require the installation of electrical conduit.

See "Accessories" on page 91 for selection of cables.

The S4B is designed and manufactured to be highly resistant to electrical noise and to operate reliably in industrial settings. However, extreme electrical noise may cause a random Trip condition; in extreme cases, a Lockout is possible.

Emitter and receiver wiring is low voltage; routing the sensor wires alongside power wires, motor/servo wires, or other high voltage wiring may inject noise into the S4B System. It is good wiring practice, and sometimes may be required by code, to isolate emitter and receiver cables from high-voltage wires and to avoid routing cables close to sources of noise.

Sensor cabling and any interconnect wiring should have an insulation temperature rating of at least 90 °C (194 °F).

See "Maximum machine interface cable length versus total load current (OSSDs)" on page 82 for more information.

5.2 Scan Code Selection

The emitter and receiver may be configured to one of two scan codes (1 or 2).

A receiver recognizes light only from an emitter with the same scan code. Both the emitter and its corresponding receiver must have the same scan code setting. The scan code must be configured with power off because the removable disconnect cordset assemblies must be removed from the units. See "Accessories" on page 91 for options.

In a cascade system the scan codes automatically alternate. If the host is set at scan code 1, the first remote (second unit) will be scan code 2, the second remote (third unit) will be scan code 1, and the third remote (fourth unit) will be scan code 2.

© Banner Engineering Corp. All rights reserved.
www.bannerengineering.com

The default scan code setting is scan code 1.

To change the scan code setting, use the following instructions.

1. Remove the removable disconnect cordset assembly from the sensor by loosening the two or four screws (#1 Phillips drive), depending on the model.

NOTE: The screws are captive screws and should not be removed from the cordset assembly.

Figure 19. Remove the Cordset

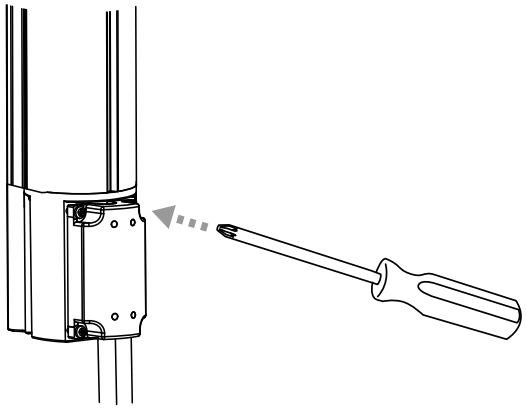

2. Flip the cordset over to see the switches.

Figure 20. Scan Code Switches

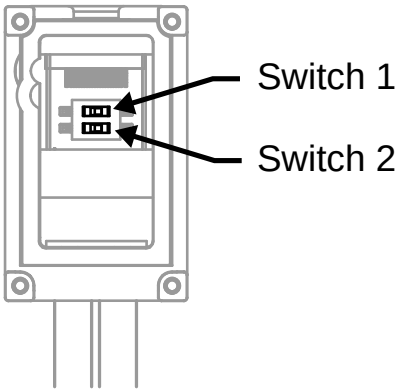

Scan Code 1: Switch 1 (top switch) in the left position

Scan Code 2: Switch 1 (top switch) in the right position

3. Position the cordset onto the sensor.
4. Tighten the two or four screws to 0.25 Nm (2.2 in-lbs).

NOTE: Do not overtighten the RD screws. Overtightening the screws could result in damage to the RD and/or end cap threads of the sensor.

5.3 Set Reduced Resolution: FID 4 and Later

1. Remove the removable disconnect cordset assembly from the sensor by loosening four screws (#1 Phillips drive).

NOTE: The screws are captive screws and should not be removed from the cordset assembly.

© Banner Engineering Corp. All rights reserved.
www.bannerengineering.com

Figure 21. Remove the Cordset

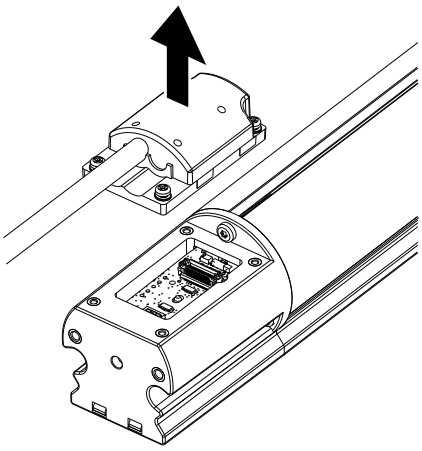

The switches are located on the control panel.

Figure 22. Receiver DIP Switches Location

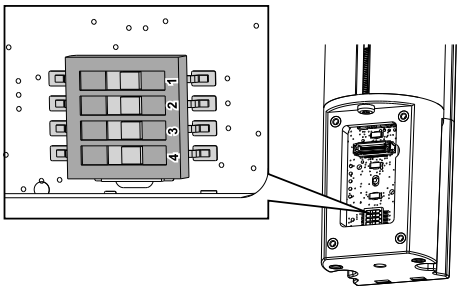

2. Adjust the switches as desired.

Table 13. Receiver DIP Switches Settings for Reduced Resolution

Setting	DIP Switch 1	DIP Switch 2	DIP Switch 3	Dip Switch 4
Reduced resolution enabled	Right (On)			Right (On)
Reduced resolution disabled	Left (Off)			Left (Off)

For reduce resolution, both switches must either be on (right) or off (left). A mismatch causes a lockout.

3. Position the cordset onto the sensor.
4. Tighten the four screws to 0.25 Nm (2.2 in-lbs).

NOTE: Do not overtighten the RD screws. Overtightening the screws could result in damage to the RD and/or end cap threads of the sensor.

5.4 Enable or Disable the End Cap Illumination: FID 4 and Later

1. Remove the removable disconnect cordset assembly from the sensor by loosening four screws (#1 Phillips drive).

NOTE: The screws are captive screws and should not be removed from the cordset assembly.

© Banner Engineering Corp. All rights reserved.
www.bannerengineering.com

Figure 23. Remove the Cordset

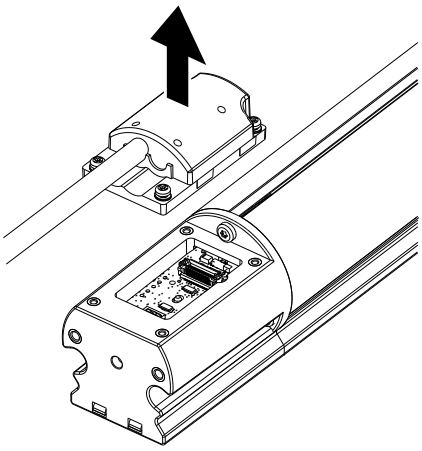

The switches are located on the control panel.

Figure 24. Receiver DIP Switches Location

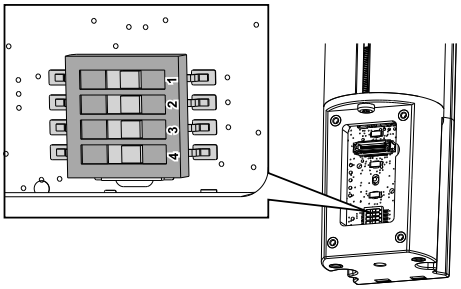

2. Adjust the switches as desired.

Table 14. Receiver DIP Switches Settings for End Cap Illumination

Setting	DIP Switch 1	DIP Switch 2	DIP Switch 3	Dip Switch 4
Receiver end cap light enabled		Left (Off)		
Receiver end cap light disabled		Right (On)		

3. Position the cordset onto the sensor.
4. Tighten the four screws to 0.25 Nm (2.2 in-lbs).

NOTE: Do not overtighten the RD screws. Overtightening the screws could result in damage to the RD and/or end cap threads of the sensor.

© Banner Engineering Corp. All rights reserved.
www.bannerengineering.com

5.5 Initial Electrical Connections

WARNING:

- **Risk of electric shock**
- Use extreme caution to avoid electrical shock. Serious injury or death could result.
- Always disconnect power from the safety system (for example, device, module, interfacing, etc.), guarded machine, and/or the machine being controlled before making any connections or replacing any component. Lockout/tagout procedures might be required. Refer to OSHA 29CFR1910.147, ANSI Z244-1, or the applicable standard for controlling hazardous energy.
- Make no more connections to the device or system than are described in this manual. Electrical installation and wiring must be made by a Qualified Person[4] and must comply with the applicable electrical standards and wiring codes, such as the NEC (National Electrical Code), NFPA 79, or IEC 60204-1, and all applicable local standards and codes.

Lockout/tagout procedures may be required (refer to OSHA1910.147, ANSI Z244-1, ISO 14118, or the appropriate standard for controlling hazardous energy).

Make the electrical connections in the order described in this section. Do not remove end-caps; no internal connections are to be made. All connections are made through the RD cordset connection.

Emitter Cordset

S4B emitters require a mating 5-pin or 8-pin cordset, but not all conductors are used. The other wires are in place to allow a parallel connection (color-for-color) to the receiver cable, providing sensor interchangeability (or “swapability”); either sensor may be installed at either cordset connection. In addition to providing similar cabling, this wiring scheme is advantageous during installation, wiring, and troubleshooting.

5-pin Receiver Cordset

Do not connect any wires to the machine control circuits (OSSD outputs) at this time.

8-pin Receiver Cordset

Do not connect any wires to the machine control circuits (OSSD outputs) at this time. For the initial power-up and checkout, External Device Monitoring (EDM) must be configured/wired (see "External Device Monitoring" on page 55). Take precautions to prevent unused wires from shorting to ground or to other sources of energy (for example, terminate with a wire-nut). Final OSSD wiring must be completed later.

5.6 Initial Checkout Procedure

The initial checkout procedure must be performed by a Qualified Person. It must be performed only after configuring the System and after connecting the components.

Perform this procedure to:

- Ensure proper installation when the System is first installed
- Ensure proper System function whenever any maintenance or modification is performed on the System or on the machinery that is guarded by the System.

5.6.1 Configuring the System for Initial Checkout

For the initial checkout, the S4B System must be checked without power available to the guarded machine. Final interface connections to the guarded machine cannot take place until the light curtain system has been checked out. This may require lockout/tagout procedures (refer to OSHA1910.147, ANSI Z244-1, ISO 14118, or the appropriate standard for controlling hazardous energy). The OSSD connections will be made after the initial checkout procedure has been successfully completed.

Verify that:

- Power has been removed from (or is not available to) the guarded machine and its controls or actuators
- The machine control circuit or the Safety/Interface Module is not connected to the OSSD outputs at this time (permanent connections will be made later)

[4] A Qualified Person is a person who, by possession of a recognized degree or certificate of professional training, or who, by extensive knowledge, training and experience, has successfully demonstrated the ability to solve problems relating to the subject matter and work.

© Banner Engineering Corp. All rights reserved.
www.bannerengineering.com

- EDM is configured and wired per application requirements (one-channel or no monitoring, see "External Device Monitoring" on page 55)

5.6.2 Apply Initial Power to the System

1. Inspect the area near the light curtain for reflective surfaces, including work pieces and the guarded machine. Reflective surfaces may cause light beams to reflect around a person in the light curtain, preventing the person from being detected and not stopping the machine motion (see "Adjacent Reflective Surfaces" on page 28).
2. Eliminate the reflective surfaces as much possible by relocating, painting, masking, or roughening them. Remaining problem reflections will become apparent during the trip test.
3. Verify that power is removed from the S4B System and from the guarded machine and that the OSSD safety outputs are not connected.
4. Remove all obstructions from the light curtain.
5. With the power to the guarded machine off, connect +24 V DC (brown wire) and 0 V DC (blue wire) on both the emitter and receiver cables to a SELV-rated power supply. Make external device monitoring (EDM) connections on both the emitter and receiver cables, if applicable. See "Wiring Diagrams" on page 59.
6. Power up the S4B System only.
7. Verify that the input power is present to both the emitter and the receiver. At least one indicator on both the emitter and the receiver should be on and the start-up sequence should cycle.
8. Watch both the emitter and the receiver Status indicators and the receiver Zone indicators to determine the light curtain alignment status.
   - **Emitter Lockout Condition**—the emitter's red Status indicator is single-flashing and the receiver's red Status indicator is on. Proceed to "Troubleshooting" on page 75 for diagnostic information.
   - **Receiver Lockout Condition** —the receiver Status indicator is single-flashing red. Proceed to "Troubleshooting" on page 75 for diagnostic information.
   - **Normal Operating Mode** (emitter)—The green Status indicator is on.
   - **Clear (Run) Condition** (receiver)—The green Status indicator is on. All green Zone indicators are on. If the optical alignment is already optimized and one-channel EDM is in use, proceed to "EDM Functionality Test" on page 45.
   - **A Blocked Condition** (receiver)—The red Status indicator is on and one or more red Zone indicator(s) are on, identifying the location of the blocked beams. Proceed to "Optically Align the System Components" on page 43.

   NOTE:
   FID 3 or older sensors: If beam 1 is blocked, Zone indicator 1 is red, and all others are off. Beam 1 provides the synchronization signal.

   FID 4 and later sensors: If beam 1 is blocked at power up, if beam 1 and the last channel are blocked, or if beam 1 is blocked for longer than a minute, Zone indicator 1 is red and all others are off.

   See "Operating Features" on page 12 for indicator and display information.
9. Proceed to "Optically Align the System Components" on page 43.

5.6.3 Optically Align the System Components

To verify the optimal alignment, adjust the sensor rotation with the power on and follow these steps.

WARNING:
- **Hazard exposure**
- Failure to follow these instructions could result in serious injury or death.
- Verify that no individuals are exposed to any hazard if the output signal switching device (OSSD) outputs turn on when the emitter and receiver become aligned.

Before beginning, verify the sensor mounting.

1. Verify that the emitter and the receiver are pointed squarely at each other. The sensor face must be perpendicular to the optical axis.

© Banner Engineering Corp. All rights reserved.
www.bannerengineering.com

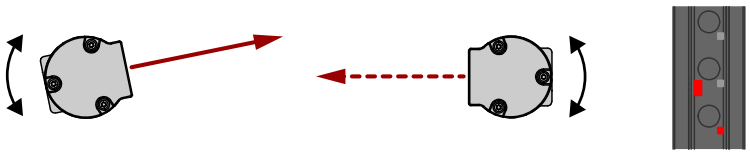

If the Channel #1 beam is not aligned, the Status and Zone 1 indicators are red and Zone indicators 2–3 are off.

2. If the green Status indicator is on, go to the next step. If not, rotate each sensor (one at a time) left and right until the green Status indicator is on. (As the sensor rotates out of alignment, the red Status indicator turns on). As more beams are aligned, the Zone indicators turn from red to green.

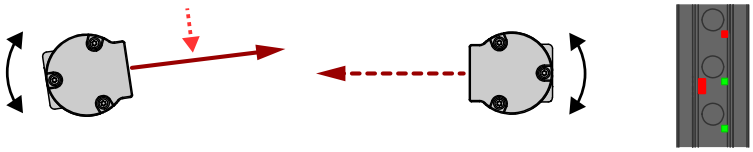

3. Optimize alignment and maximize excess gain.

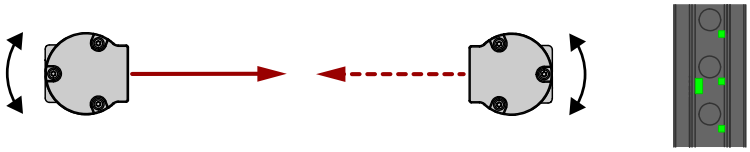

   a. Slightly loosen the sensor mounting screws.
   b. Rotate one sensor left and right, noting the positions in each arc where the Status indicators turn red (Blocked condition) or a zone indicator turns yellow (weak beam strength); repeat with the other sensor.
   c. Center each sensor between those two positions.
   d. Tighten the mounting screws, making sure to maintain the positioning as the screws are tightened.

If at any time the red Status indicator begins to flash, the System has entered a Lockout condition. See "Troubleshooting" on page 75 for further information.

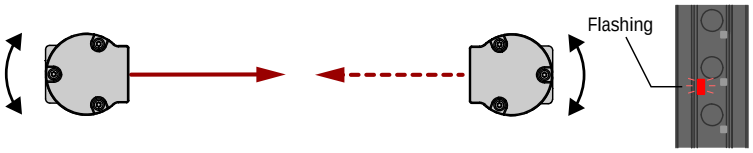

5.6.4 Optical Alignment Procedure with Mirrors

S4B sensors may be used with one or more corner mirrors for guarding more than one side of an area. The SSM-... rear-surface glass mirrors are rated at 85% efficiency. Thus, excess gain and sensing range are reduced when using mirrors; see Use of Corner Mirrors, under "Mechanical Installation Considerations" on page 22.

During any adjustments, allow only one individual to adjust any one item at any one time.

In addition to the standard optical alignment procedure, verify:

1. The emitter, receiver, and all mirrors are level and plumb.
2. The middle of the defined area and the center point of the mirrors are approximately the same distance from a common reference point, such as the same height above a level floor.
3. There are equal amounts of mirror surface above and below the defined area such that the optical beams are not passing below or above the mirror.

© Banner Engineering Corp. All rights reserved.
www.bannerengineering.com

Figure 25. Corner Mirror Alignment

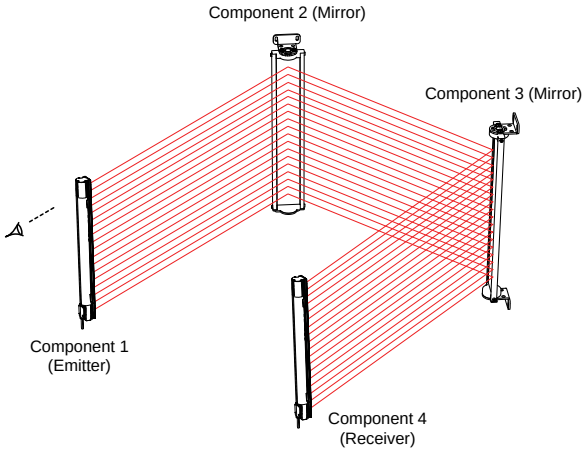

Figure 26. Optical Alignment Using the LAT-1

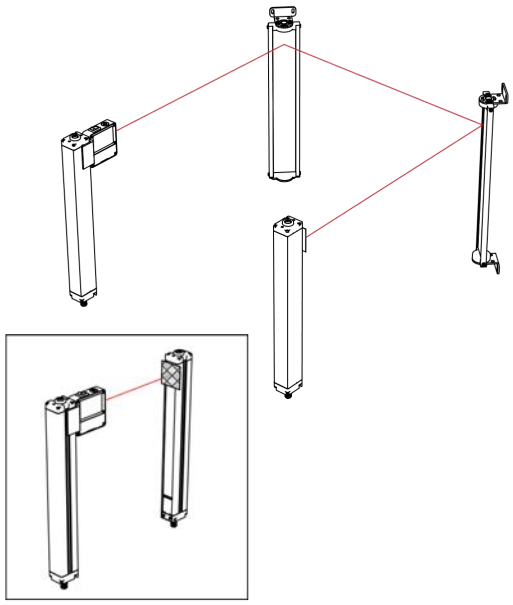

NOTE: An LAT-1 Laser Alignment Tool is very helpful by providing a visible red dot along the optical axis. See "Alignment Aids" on page 98 and Banner Safety Applications Note SA104 (p/n 57477) for more information.

5.6.5 EDM Functionality Test

If one-channel EDM is used, use the following procedure to verify that the external device monitoring (EDM) circuit is working properly.

1. With power on or off, disconnect the EDM wire (pin 4, yellow wire). See "Wiring Diagrams" on page 59.
2. If the power is on, block and clear the light curtain. If the power is off, turn the power on, then block and clear the light curtain.
3. The receiver should enter an output lockout (red status LED flashing, Zone 1 indicator on).
   - If the system enters lockout state, the EDM wiring is correct.
   - If the system does not enter a lockout state, assuming that the curtain is aligned if the power was off, the EDM wiring is not correct.
4. Turn the power off and reconnect the EDM wire (pin 4, yellow).

5.6.6 Reduced Resolution (Floating Blanking)

Reduced resolution increases the minimum diameter of an object that the light curtain can reliably detect anywhere within its defined area. This allows objects of a certain maximum size to interrupt the defined area without causing a Trip condition (that is, the OSSDs turn Off).

Use reduced resolution only when necessary. In reduced-resolution applications, the safety (minimum) distance always increases due to the larger reaching distance associated with a protective device (D_{DS}). In either case, see "Calculating the Safety Distance (Minimum Distance)" on page 22 to determine safety distance.

With one-beam reduced resolution enabled, any beam can be blocked without causing a stop condition. Thus, multiple "holes" are created in which 14 mm system will detect a 25 mm object and ignore a 6 mm object. Similarly, 30 mm sensors will detect a 60 mm object and ignore a 20 mm object. See "Figure: Access the DIP Switches" on page 16.

© Banner Engineering Corp. All rights reserved.
www.bannerengineering.com

Figure 27. Reduced Resolution

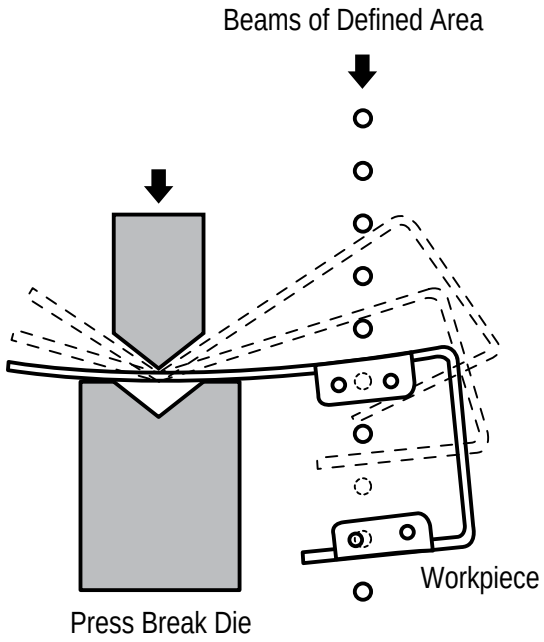

Table 15. Reduced Resolution

Resolution	Reduced Resolution Setting	Maximum Size of Undetected Objects	Resulting Resolution
14 mm	Off	Not applicable	14 mm (0.55 in)
	On (1-beam)	6 mm (0.24 in)	24 mm (0.94 in)
30 mm	Off	Not applicable	30 mm (1.18 in)
	On (1-beam)	20 mm (0.79 in)	60 mm (2.36 in)

WARNING:
- **Use reduced resolution and fixed blanking only when necessary**
- Failure to follow these instructions could result in serious injury or death.
- Completely fill any holes created in the sensing field with the blanked object or increase the safety (minimum) distance to account for the larger resolution.

5.6.7 Conduct a Trip Test

After optimizing the optical alignment and configuring fixed blanking and/or reduced resolution (if applicable), perform a trip test to verify the detection capability of the S4B System.

This test also verifies correct sensor orientation, identifies optical short circuits, and verifies the expected resolution for applications using reduced resolution. After the installation has passed the trip test, the safety outputs may be connected and the commissioning checkout may be performed (initial installations only).

1. Select the proper test piece, ordered separately.
   - For 14 mm resolution models: use the 14 mm (0.55 in) diameter model STP-13
   - For 30 mm resolution models: use the 30 mm (1.18 in) diameter model STP-14
   - For 14 mm resolution models using reduced resolution: use the 24 mm (0.94 in) diameter model STP-21
   - For 30 mm resolution models using reduced resolution: use the 60 mm (2.36 in) diameter model STP-15
2. Verify that the System is in run mode, the green Status indicator is on, and all Zone indicators are green.
3. Pass the specified test piece through the defined area in three paths: near the emitter, near the receiver, and midway between the emitter and receiver.

© Banner Engineering Corp. All rights reserved.
www.bannerengineering.com

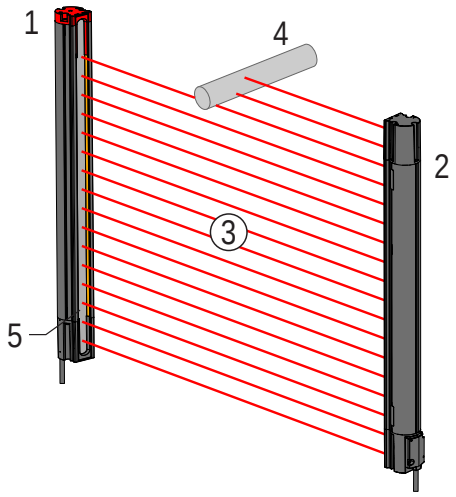

1 = Receiver
2 = Emitter
3 = Defined area
4 = Specified test piece
5 = Location of the status indicators

4. During each pass, while the test piece is interrupting the defined area, at least one Zone indicator must be red. The red Zone indicator must change with the position of the test piece within the defined area.

   The Status indicator must turn red and remain red for as long as the test piece remains in the defined area. For FID 4 receivers with the illuminated end cap enabled and at its default color settings, the end cap must flash red and remain flashing as long as the test piece remains in the defined area. If not, the installation has failed the trip test.
   If all Zone indicators turn green or fail to follow the position of the test piece while it is within the defined area, the installation has failed the trip test. Check for correct sensor orientation or reflective surfaces. Do not continue until the situation is corrected.

   When the test piece is removed from the defined area, the green Status indicator must turn on. For FID 4 units with the receiver end cap illumination enabled, the end cap should also turn green.

WARNING:
- **Trip test failure**
- Using a system that has failed a trip test can result in serious bodily injury or death. If the trip test has failed, the system might not stop dangerous machine motion when a person or object enters the sensing field.
- Do not attempt to use the system if the system does not respond properly to the trip test.

5. If mirrors are used in the application: Test the defined area on each section of the sensing path (for example, emitter to mirror, between mirror and receiver).

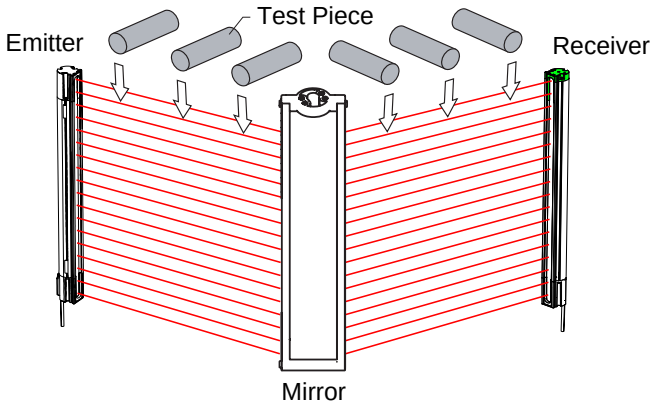

6. If a cascade system is in use in the application: Test the defined area of each sensing pair (for example, light curtain system 1, light curtain system 2, etc.).
7. If the S4B System passes all checks during the trip test, go on to "Electrical Connections to the Guarded Machine" on page 53.

© Banner Engineering Corp. All rights reserved.
www.bannerengineering.com

5.7 Using Remote Fixed Blanking

On FID 3 or later receiver models, fixed blanking is available to, in effect, “disable” beams that would otherwise be continually blocked by a stationary object. One or multiple areas within an S4B sensor pair may be “blanked out,” with a minimum of one beam between two blanked areas.

The first sensing beam (CH1, synchronization beam) at the removable disconnect end of the sensor must remain clear (cannot be blocked); any other beam may be blanked. All beams of a fixed blanked area must remain blocked during operation in order for the OSSDs to remain ON.

The Remote Fixed Blanking feature can configure an S4B receiver used as a stand-alone system or in a cascaded system. A DES4-M81-F51-D or DES4-M51-F51-D used with a S4BA-RFB, remote fixed blanking configuration tool, and a S4BA-RTP-1 for a single receiver or a DES4-M51-F51-D-REM used with a S4BA-RFB and a S4BA-RTP-1 for a cascade system provides a convenient means to program the blanked area. The S4BA-RFB can also be placed between receivers of a cascade system.

Figure 28. S4BA-RFB Placement in a S4B System

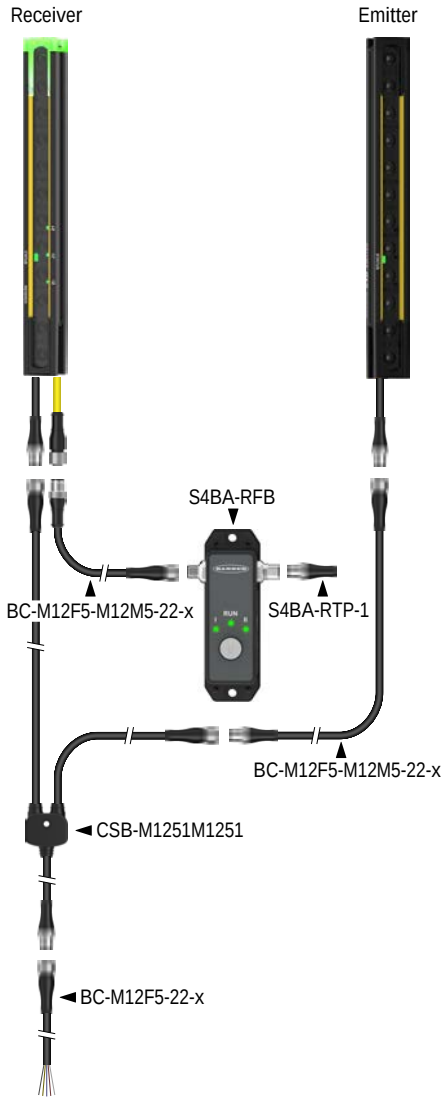

© Banner Engineering Corp. All rights reserved.
www.bannerengineering.com

Figure 29. S4BA-RFB Placement in a Cascade S4B System

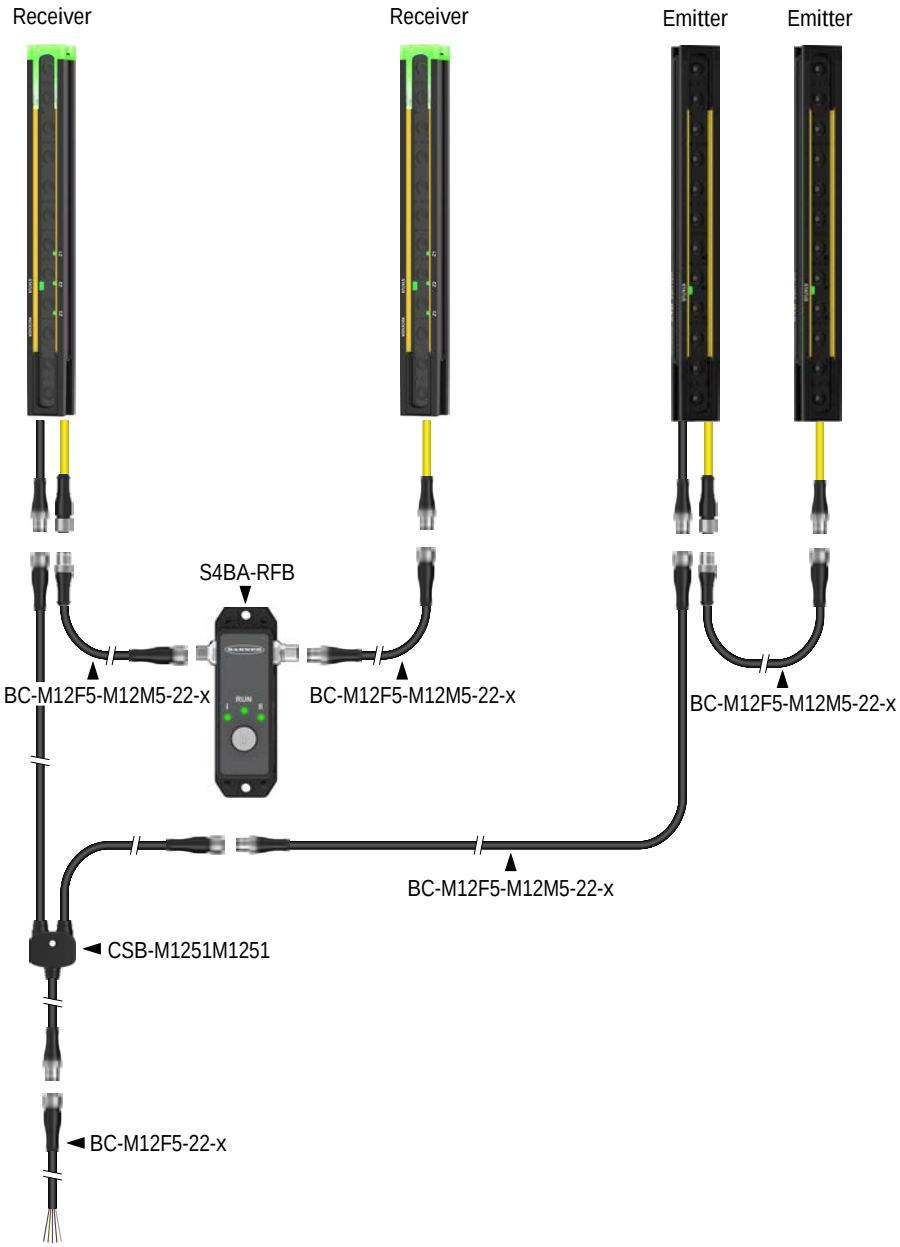

The remote programming is effective on all receivers in the cascaded system. For example, multiple areas can be blanked on different sensor pairs. After programming, the S4BA-RFB can be removed (with power OFF) and replaced by the terminator plug, S4BA-RTP-1, or the S4BA-RFB can be left in place.

5.7.1 Programming Key Switch Location and LED Status

The S4BA-RFB, remote fixed blanking configuration tool, is required to perform the remote configuration procedure. The key-actuated switch provides some supervisory control since the key can be removed from the switch.

The S4BA-RFB must be:

- Located outside the guarded area
- Located to allow the switch operator full unobstructed view of the entire defined area
- Protected against unauthorized or inadvertent operation

The S4BA-RTP-1 must be screwed into the female connector of the S4BA-RFB when it is used with a stand-alone receiver or at the end of a cascade chain of receivers.

© Banner Engineering Corp. All rights reserved.
www.bannerengineering.com

NOTE:

- Use Fixed Blanking only when necessary.
- Any holes created in the defined area either must be completely filled by the blanked object or the safety (minimum) distance must be increased to account for the larger resolution. See "Calculating the Safety Distance (Minimum Distance)" on page 22.

The S4BA-RFB's key switch has three positions. The standard operating position, RUN, is the starting point and the end point for all configuration processes. The S4B system will be up and running when the key is in this position. The fixed blanking teach position (I) is used to teach the system the number and position of blocked beams. The vibration (beam) tolerance position (II) is used to turn on and off 1 beam vibration (beam) tolerance for high vibration applications.

Figure 30. Key Switch Direction



Table 16. S4BA-RFB LED Status

	Fixed Blanking	Operating	Vibration Tolerance
Label	**I**	**RUN**	**II**
Within the first two seconds at start up	Green On	Red On	Green On
After the first two seconds	Off	Green slowing flashing until the indication status is received from the host	Off
Normal Operating Mode			
No fixed blanking configured	Off	Green On	Off
Fixed blanking configured, no vibration tolerance	Green On	Green On	Off
Fixed blanking configured, vibration tolerance On	Green On	Green On	Green On
Fixed Blanking Teach in Process	Green slowly flashing	Green On	Off
Configure Vibration Tolerance	Green On	Green On	Green slowly flashing
Vibration Tolerance Rejected[5]	Green On	Red slowly flashing	Green slowly flashing
Key not in Run position at power-up	Off[6]	Green On	Off[6]

Continued on page 51

[5] Two configured fixed blanking areas that have less than 3 beams between them.
[6] When powered off, the current fixed blanking pattern and LED indication are saved by the host. The next time the system is powered on, the LED indicators display the host's saved indication. This means that indicator I and indicator II could be green, depending on the saved indication.

© Banner Engineering Corp. All rights reserved.
www.bannerengineering.com

Continued from page 50

	Fixed Blanking	Operating	Vibration Tolerance
Label	**I**	**RUN**	**II**
Failures			
Lost communication with Host	Off	Red rapidly flashing	Off
Key left in Blanking Program (I) position for 10 minutes or more	Green rapidly flashing	Red rapidly flashing	Green rapidly flashing
Key left in the Vibration Tolerance (II) position for 10 minutes or more	Green rapidly flashing	Red rapidly flashing	Green rapidly flashing
Cascade Configuration Contains an FID 2 Receiver	Off	Red rapidly flashing	Off
Key moved to Vibration Tolerance (II) with no Channels Blanked	Off	Green On	Off

5.7.2 Remote Fixed Blanking Programming Procedure

Prior to performing this procedure, install the S4B system per "Mechanical Installation" on page 22. Align the emitter/receiver pair and perform all required checkout procedures to ensure proper operation. Ensure that the S4BA-RFB programming key switch is located in the Run position at power-up and for normal operation.

WARNING:
- **Ensure no persons are present in the curtain or hazardous area**
- Failure to follow these instructions could result in serious injury or death.
- Before setting fixed blanking (or vibration tolerance) ensure that no persons are present in the light curtain or the hazardous area.

IMPORTANT: After setting fixed blanking (and/or vibration tolerance), perform a complete Commissioning Checkout. See "Commissioning Checkout" on page 58.

IMPORTANT: The first sensing beam (CH1 synchronization beam) at the connector end of the sensor must remain clear during normal operation.

Initial Programming

If no fixed blanking was previously programmed, perform the following procedure:

1. Locate the obstruction in the defined area and secure it in place.

   The Receiver status LED turns red and the appropriate zone indicator(s) turn red. The OSSD outputs turns off.
2. Turn the S4BA-RFB key to the Fixed Blanking Teach (I) position (in a counterclockwise direction if the Banner logo is up) and keep the key in this position for a minimum of 1 second (the key will stay in this position if released).

   The position I LED slowly flashes while the fixed blanking is being taught; the Run LED is on green solid. The Receiver status LED is off and the zone 1 indicator is flashing green (if in a cascade chain, all receiver LEDs show this).
3. Return the key to the Run (center) position.

   After a couple of seconds, the OSSD outputs turn On. The Receiver status LED turns green. The zone indicator(s) that have fixed areas single flash green.

   NOTE: Make sure that the Receiver status LED is green before adding vibration (beam) tolerance, if desired.

Alternate Programming Method

1. Turn the S4BA-RFB key to the Fixed Blanking Teach (I) position (in a counterclockwise direction if the Banner logo is up).

© Banner Engineering Corp. All rights reserved.
www.bannerengineering.com

The key will stay in this position when released. The position I LED slowly flashes while the fixed blanking is being taught; the Run LED is on green solid. The Receiver status LED is off and the zone 1 indicator is flashing green (if in a cascade chain, all receiver LEDs will show this).

> **NOTE:** If the key is left in this position for more than 10 minutes a lockout will occur. To clear the lockout, turn the key to Run then back to the Teach position.

2. Locate the obstruction in the defined area and secure it in place.
3. Return the key to the Run position.

   After a couple of seconds, the OSSD outputs turn On. The Receiver status LED turns green. The zone indicator(s) that have fixed areas single flash green.

> **NOTE:** Make sure that the Receiver status LED is green before adding vibration (beam) tolerance, if desired.

Further Programming with the Power On

To change (relocate) or clear (remove) previous fixed blanking configurations, follow either programming procedure.

WARNING:
- Use vibration tolerance and fixed blanking only when necessary
- Failure to follow these instructions could result in serious injury or death.
- Completely fill any holes created in the sensing field with the blanked object or increase the safety (minimum) distance to account for the larger resolution.

5.7.3 Vibration (Beam) Tolerance Programming Procedure

After a fixed blanked area has been taught, vibration tolerance can be added.

Vibration tolerance allows the first blocked beam on each side of a blanked area to bounce clear or the first clear beam on either side of a blocked area to bounce blocked without causing a lockout or blocked (OSSD off) state. See "Safety Distance (Minimum Distance) Considerations" on page 52 and "Vibration Tolerance Limitations" on page 53.

1. Turn the S4BA-RFB key to the Vibration (Beam) Tolerance (II) position (in a clockwise direction if the Banner logo is up) and keep the key in this position for a minimum of 1 second (the key will stay in this position if released).

   The position II LED slowly flashes while the key is in this position; the Run and position I LED are On green solid.
2. Return the key to the RUN (center) position.

   After a couple of seconds, the OSSD outputs turn ON. The Receiver status LED turns Green. The zone indicators that have fixed areas double flash green. All three LEDs on the S4BA-RFB stay On green solid.

> **IMPORTANT:** Observe the correct Safety Distance when using Blanking.

> **NOTE:** Vibration Tolerance and Floating Blanking cannot be used at the same time. Trying to engage both features will result in a Lockout condition.

Safety Distance (Minimum Distance) Considerations

Fixed object that does NOT block the entire range of the safety area requires a Safety Distance based on the size of the fixed object.

Engaging vibration (beam) tolerance increases the resolution of the detection field on both sides of a blanked area. Because the first clear beam can be blocked or the first blocked beam could clear, a 2-beam opening can be created, thus increasing the resolution of the detection field. The new effective resolution on either side of the blanked area and required depth penetration factors are:

© Banner Engineering Corp. All rights reserved.
www.bannerengineering.com

Curtain Resolution	Effective Resolution (2-beam opening)	D_{pf} per ANSI B11.19	D_{pf} per ISO 13855
14 mm	34 mm	92 mm (3.62 in)	160 mm
30 mm	80 mm	850 mm (33.5 in)	850 mm

Engaging vibration (beam) tolerance when the blanked area is only a single beam wide,

Less than 24 mm for 14 mm resolution systems
Less than 55 mm for 30 mm resolution systems

requires a Safety Distance based on a 3-beam window in the protected area. The new effective resolution at the single beam blanked area and the required depth penetration factors are:

Curtain Resolution	Effective Resolution (3-beam opening)	D_{pf} per ANSI B11.19	D_{pf} per ISO 13855
14 mm	44 mm	126 mm (4.96 in)	850 mm
30 mm	105 mm	850 mm (33.5 in)	850 mm

Vibration Tolerance Limitations

The first clear beam on both sides of the fixed blanked area cannot be blocked (the blocked area should not grow in size (just vibrate)). Both clear beams going blocked will result in a blocked state.

The first blocked beam on both sides of the fixed blanked area cannot be clear (the blocked area should not shrink in size (just vibrate)). Both blocked beams going clear will result in a lockout condition.

If multiple fixed blanked areas exist, vibration tolerance CANNOT be used if the gap between areas is less than 3 beams. To ensure vibration tolerance will engage, the gap must be at least 34 mm for a 14 mm system or 80 mm for a 30 mm resolution system. The vibration tolerance light (II) will flash green and the run light will flash red on the S4BA-RFB to signify that the vibration tolerance setting was rejected. Returning the key to the run position will return the system to normal operation (fixed blanking set but no vibration tolerance).

IMPORTANT: Any time a unit in a cascade chain that has fixed blanking set in any sensor is replaced, it is required that the fixed blanking and vibration tolerance settings be re-taught to the system.

5.8 Electrical Connections to the Guarded Machine

Verify that power has been removed from the S4B System and the guarded machine. Make the permanent electrical connections as required by each individual application.

Lockout/tagout procedures may be required (refer to OSHA 1910.147, ANSI Z244-1, ISO 14118, or the appropriate standard for controlling hazardous energy). Follow relevant electrical standards and wiring codes, such as the NEC, NFPA79 or IEC 60204-1.

Supply power and EDM should already be connected. The S4B must also have been aligned and passed the Initial Checkout, as described in "Initial Checkout Procedure" on page 42.

The final connections to be made or verified are:

- output signal switching device (OSSD) outputs
- final switching device (FSD) interfacing
- machine primary control element/external device monitoring (MPCE/EDM)

WARNING:

- **Risk of electric shock**
- Failure to follow these instructions could result in serious injury or death.
- Disconnect or turn off power before installing, removing, or servicing the device.
- Install and connect the device in accordance with the National Electrical Code (NEC) and any applicable local code requirements and supply the device with an appropriate fuse box or circuit breaker (see *Specifications*).

© Banner Engineering Corp. All rights reserved.
www.bannerengineering.com

5.8.1 OSSD Output Connections

Refer to the output specifications in the "Specifications" on page 17 and these warnings before making output signal switching device (OSSD) output connections and interfacing the S4B to the machine.

WARNING:

- **Interfacing both output signal switching devices (OSSD)**
- Failure to follow these instructions could result in serious injury or death.
- Unless the same degree of safety is maintained, never wire an intermediate device(s) (PLC, PES, PC) between the safety module outputs and the master stop control element it switches such that a failure causes a loss of the safety stop command or the failure allows the safety function to be suspended, overridden, or defeated.
- Connect both OSSD outputs to the machine control so that the machine's safety-related control system interrupts the circuit to the machine primary control element(s), resulting in a non-hazardous condition.

WARNING:

- **OSSD Interfacing**
- Failure to properly interface the OSSD Outputs to the guarded machine could result in serious injury or death.
- To ensure proper operation, the Banner device output parameters and machine input parameters must be considered when interfacing the Banner device OSSD outputs to machine inputs. Design machine control circuitry so that all of the following are true:

  The maximum load resistance value is not exceeded.
  The maximum specified OSSD OFF-state voltage does not result in an ON condition.

5.8.2 Protective Stop (Safety Stop) Circuits

A protective stop (safety stop) allows for an orderly cessation of motion for safeguarding purposes, which results in a stop of motion and removal of power from the Machine Primary Control Elements (MPCE) (assuming this does not create additional hazards).

A protective stop circuit typically comprises a minimum of two normally open contacts from forced-guided, mechanically linked relays, which are monitored through External Device Monitoring (EDM) to detect certain failures, to prevent the loss of the safety function. Such a circuit can be described as a "safe switching point".

Typically, protective stop circuits are either single-channel, which is a series connection of at least two normally open contacts; or dual-channel, which is a separate connection of two normally open contacts. In either method, the safety function relies on the use of redundant contacts to control a single hazard. If one contact fails ON, the second contact arrests the hazards and prevents the next cycle from occurring. See "Generic Wiring Diagram—8-pin Receiver and Redundant FSDs" on page 63.

The interfacing of the protective stop circuits must be accomplished so that the safety function cannot be suspended, overridden, or defeated, unless accomplished in a manner of the same or greater degree of safety as the machine's safety-related control system that includes the S4B.

The normally open safety outputs from an interface module provide a series connection of redundant contacts that form protective stop circuits for use in either single-channel or dual-channel control. See "Generic Wiring Diagram—8-pin Receiver and Redundant FSDs" on page 63.

Machine Primary Control Elements and EDM Input

A machine primary control element (MPCE) is an electrically powered element that directly controls the normal operation of a machine in such a way that it is the last element (in time) to function when machine operation is to be initiated or arrested (per IEC 61496-1). Examples include motor contactors, clutch/brakes, valves, and solenoids.

Depending on the level of risk of harm, it may be required to provide redundant MPCEs or other control devices that are capable of immediately stopping the dangerous machine motion, irrespective of the state of the other. These two machine control channels need not be identical (diverse redundant), but the stop time performance of the machine (Ts, used to calculate the safety distance, see "Calculating the Safety Distance (Minimum Distance)" on page 22) must take into account the slower of the two channels. Consult the machine manufacturer for additional information.

© Banner Engineering Corp. All rights reserved.
www.bannerengineering.com

To ensure that an accumulation of failures does not compromise the redundant control scheme (cause a failure to danger), a method to verify the normal functioning of MPCEs or other control devices is required. S4B provides a convenient method for this verification: external device monitoring (EDM).

For the S4B external device monitoring to function properly, each device must include a normally closed, forced-guided (mechanically linked) contact that can accurately reflect the status of the device. This ensures that the normally open contacts, used for controlling hazardous motion, have a positive relationship with the normally closed monitoring contacts and can detect a failure to danger (for example, contacts that are welded closed or stuck On).

It is strongly recommended that a normally closed, forced-guided monitoring contact of each final switching device (FSD) and MPCE be connected in series with the EDM input (see "Generic Wiring Diagram—8-pin Receiver and Redundant FSDs" on page 63). If this is done, proper operation will be verified. Monitoring FSD and MPCE contacts is one method of maintaining control reliability (OSHA/ANSI) and Category 3 and 4 (ISO 13849-1).

If monitoring contacts are not available or do not meet the design requirement of being forced-guided (mechanically linked), it is recommended you:

- Replace the devices so that they are capable of being monitored; or
- Incorporate the EDM function into the circuit as close to the MPCE as possible (for example, monitor the FSDs); and
- Employ the use of well-tried, tested, and robust components, and generally accepted safety principles, including fault exclusion, into the design and installation to either eliminate, or reduce to an acceptable (minimal) level of risk, the possibility of undetected faults or failures that can result in the loss of the safety function.

The principle of fault exclusion allows the designer to design out the possibility of various failures and justify it through the risk assessment process to meet the required level of safety performance, such as the requirements of Category 2, 3, or 4. See ISO 13849-1/-2 for further information.

WARNING:

- **External Device Monitoring (EDM)**
- Creating a hazardous situation could result in serious injury or death.
- If the system is configured for “no monitoring,” it is the user’s responsibility to ensure this does not create a hazardous situation.

External Device Monitoring

EZ-SCREEN® S4B Safety Light Curtain provides two possible EDM configurations: one-channel monitoring and no monitoring. Their functions are described below. The most common form of EDM is one-channel monitoring; its primary advantage is the simplicity of wiring. The installation must prevent short circuits across the normally closed monitoring contacts and to secondary sources of power.

Figure 31. One-channel EDM status, with respect to safety output

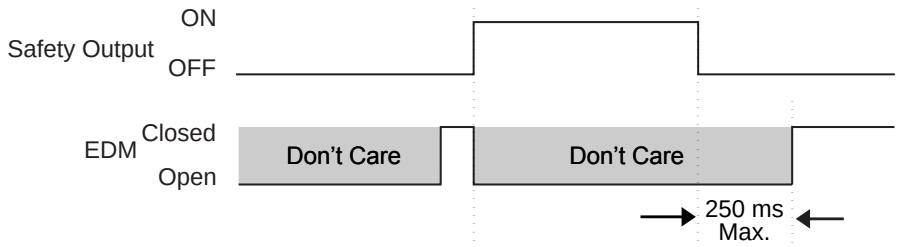

External Device Monitoring Wiring

If not connected previously, it is again strongly recommended that one normally closed, forced-guided monitoring contact of each FSD and MPCE be wired as shown in the monitoring circuit (see "Generic Wiring Diagram—8-pin Receiver and IM-T-9A Interface Module" on page 64). Pin 4 of the receiver connector provides connection for the external device monitoring input.

External device monitoring (EDM) must be wired in one of two configurations described below.

One-Channel Monitoring: This is a series connection of normally closed monitor contacts that are force-guided (mechanically linked) from each device controlled by the S4B. The monitor contacts must be closed before the S4B OSSDs can turn On.

© Banner Engineering Corp. All rights reserved.
www.bannerengineering.com

After the safety outputs (OSSDs) turn On, the status of the monitor contacts are no longer monitored and may change state. However, the monitor contacts must be closed within 250 milliseconds of the OSSD outputs going from On to Off.

Refer to "Generic Wiring Diagram—8-pin Receiver and IM-T-9A Interface Module" on page 64 for wiring. Connect the monitor contacts between +24 V DC and EDM (pin 4).

No Monitoring: Use this configuration to perform the initial checkout; see "Initial Checkout Procedure" on page 42. If the application does not require the EDM function, it is the user's responsibility to ensure that this configuration does not create a hazardous situation.

To configure the EZ-SCREEN® S4B Safety Light Curtain for no monitoring, connect EDM (pin 4) to +24 V DC.

CAUTION: Retrofit of two-channel EDM Installations—In existing installations using two-channel external device monitoring (default setting of EZ-SCREEN and EZ-SCREEN LP systems), **the parallel wiring of the normally closed monitoring contacts must be rewired for the series connection used for one-channel EDM**. The S4B uses different cables and wire colors than the EZ-SCREEN and EZ-SCREEN LP systems. For the S4B to function the entire system must be rewired. **If there are any questions concerning retrofit installations, contact Banner Engineering.**

5.8.3 Preparing for System Operation

After the initial trip test has been accomplished, and the OSSD safety outputs connections have been made to the external control device, the S4B is ready for testing in combination with the guarded machine.

The operation of the S4B with the guarded machine must be verified before the combined System and machine may be put into service. To do this, a Qualified Person must perform the Commissioning Checkout Procedure. See "Commissioning Checkout" on page 58.

5.8.4 Sensor Interchangeability

The figures and table below illustrate a wiring option that provides sensor interchangeability (or swapability)—the ability to install either sensor at either quick-disconnect connection.

The resulting installation provides the ability to swap the emitter and receiver position. This wiring option provides advantages during installation, wiring, and troubleshooting.

To use this option, connect all emitter wires in parallel (color-for-color) to the receiver cable via individual wires or the CSB.. splitter cordset.

Model CSB.. splitter cordsets and BC-M12F5-M12M5-22-x double-ended cordsets allow easy interconnection between an S4B receiver and emitter, providing a single homerun cordset.

© Banner Engineering Corp. All rights reserved.
www.bannerengineering.com

Figure 32. Individual Cordsets: 5-Wire

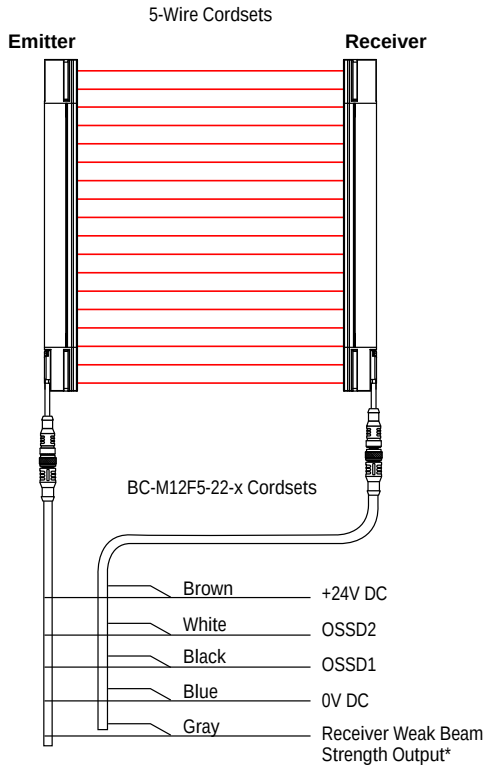

Figure 33. Individual Cordsets: 8-Wire

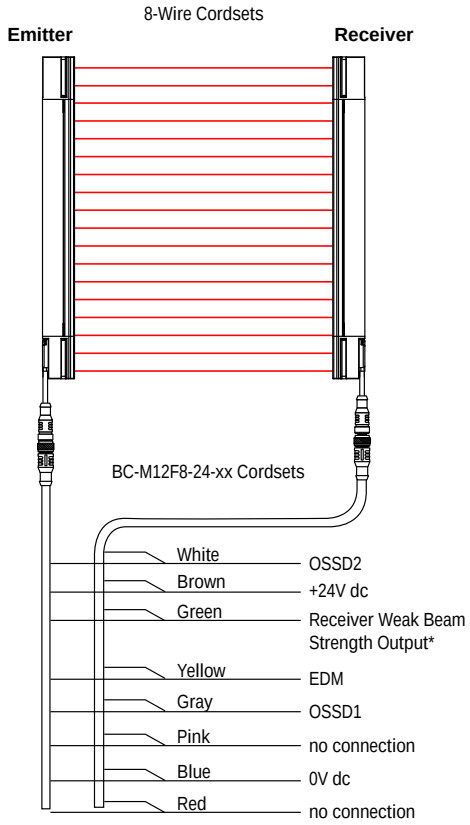

* At power up, the line acts the way it was configured (the default is a weak beam strength output). If at any time IO-Link communication is detected, the line becomes an IO-Link digital communication interface. If IO-Link communication is lost for 10 seconds, the line returns to its previous setting (the default is weak beam strength output).

Figure 34. Splitter Cordsets

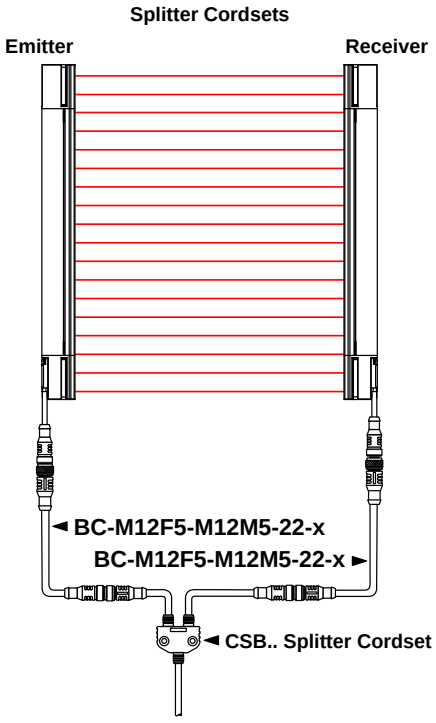

© Banner Engineering Corp. All rights reserved.
www.bannerengineering.com

5.8.5 Commissioning Checkout

Perform this checkout procedure as part of the System installation after the System has been interfaced to the guarded machine, or whenever changes are made to the System (either a new configuration of the S4B or changes to the machine).

WARNING:

- **Do not use the system until the checkouts are verified**
- Attempts to use the guarded/controlled machine before these checks are verified could result in serious injury or death.
- If all these checks cannot be verified, do not attempt to use the safety system that includes the Banner device and the guarded/controlled machine until the defect or problem has been corrected.

A Qualified Person must perform the procedure. Checkout results should be recorded and kept on or near the guarded machine as required by applicable standards.

To prepare the System for this checkout:

1. Examine the guarded machine to verify that it is of a type and design compatible with the S4B System. See "Examples: Inappropriate Applications" on page 11 for a list of misapplications.
2. Verify that the S4B is configured for the intended application.
3. Verify that the safety distance (minimum distance) from the closest danger point of the guarded machine to the defined area is not less than the calculated distance, per "Calculating the Safety Distance (Minimum Distance)" on page 22.
4. Verify that:
    a. Access to any dangerous parts of the guarded machine is not possible from any direction not protected by the S4B System, hard (fixed) guarding, or supplemental safeguarding, and
    b. It is not possible for a person to stand between the defined area and the dangerous parts of the machine, or
    c. Supplemental safeguarding and hard (fixed) guarding, as described by the appropriate safety standards, are in place and functioning properly in any space (between the defined area and any hazard) which is large enough to allow a person to stand undetected by the S4B.
5. If used, verify that all reset switches are mounted outside and in full view of the guarded area, out of reach of anyone inside the guarded area, and that means of preventing inadvertent use is in place.
6. Examine the electrical wiring connections between the S4B OSSD outputs and the guarded machine's control elements to verify that the wiring meets the requirements stated in "Electrical Connections to the Guarded Machine" on page 53.
7. Inspect the area near the defined area (including work pieces and the guarded machine) for reflective surfaces (see "Adjacent Reflective Surfaces" on page 28). Remove the reflective surfaces, if possible, by relocating them, painting, masking or roughening them. Remaining problem reflections will become apparent during the trip test.
8. Verify that power to the guarded machine is off. Remove all obstructions from the defined area. Apply power to the S4B System.
9. Observe the Status indicators:
    - **Lockout:** Red Status flashing; Zone 1, Zone 2, or Zone 3 on red
    - **Blocked:** Red Status on; one or more red Zone indicators on
    - **Clear:** Green Status on; all green Zone indicators on
10. A blocked condition indicates that one or more of the beams is misaligned or interrupted. See "Optically Align the System Components" on page 43 to correct this situation.
11. After the green Status indicator is on, perform the trip test ("Conduct a Trip Test" on page 46) on each sensing field to verify proper System operation and to detect possible optical short circuits or reflection problems. **Do not continue until the S4B passes the trip test.**

IMPORTANT: Do not expose any individual to any hazard during the following checks.

© Banner Engineering Corp. All rights reserved.
www.bannerengineering.com

WARNING:

- **Clear the guarded area before applying power or resetting the system**
- Failure to clear the guarded area before applying power could result in serious injury or death.
- Verify that the guarded area is clear of personnel and any unwanted materials before applying power to the guarded machine or before resetting the system.

12. Apply power to the guarded machine and verify that the machine does not start up.
13. Interrupt (block) the defined area with the test piece and verify it is not possible for the guarded machine to be put into motion while the beam(s) is blocked.
14. Initiate machine motion of the guarded machine and, while it is moving, use the test piece to block the defined area. Do not attempt to insert the test piece into the dangerous parts of the machine. Upon blocking any beam, the dangerous parts of the machine must come to a stop with no apparent delay.
15. Remove the test piece from the beam; verify that the machine does not automatically restart, and that the initiation devices must be engaged to restart the machine.
16. Remove electrical power to the S4B system. Both OSSD outputs should immediately turn Off, and the machine must not be capable of starting until power is re-applied to the S4B.
17. Test the machine stopping response time, using an instrument designed for that purpose, to verify that it is the same or less than the overall system response time specified by the machine manufacturer.

Do not continue operation until the entire checkout procedure is complete and all problems are corrected.

5.9 Wiring Diagrams

5.9.1 Generic Emitter Wiring Diagram

Figure 35. Generic 5-Pin Emitter Wiring Diagram

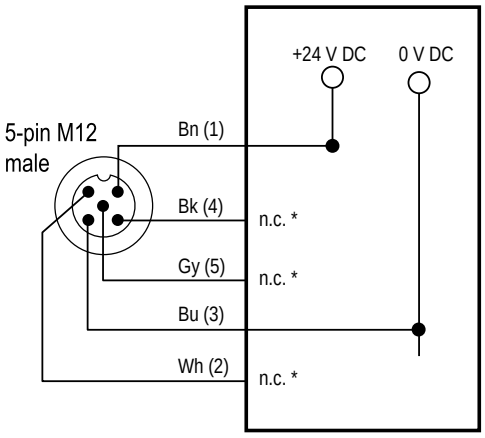

* All pins shown as no connection (n.c.) are either not connected or are paralleled to same color wire from the receiver cable.

Mating BC-M12F5-22-x Cordset Pinout			M12 Connector (female face view)
Pin	Color	Emitter Function	
1	Brown	+ 24 V DC	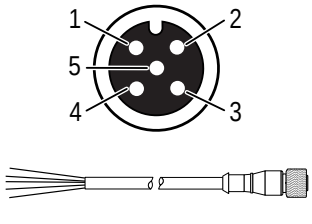
2	White	no connection	
3	Blue	0 V DC	
4	Black	no connection	
5	Gray	no connection	

© Banner Engineering Corp. All rights reserved.
www.bannerengineering.com

Figure 36. Generic 8-Pin Emitter Wiring Diagram

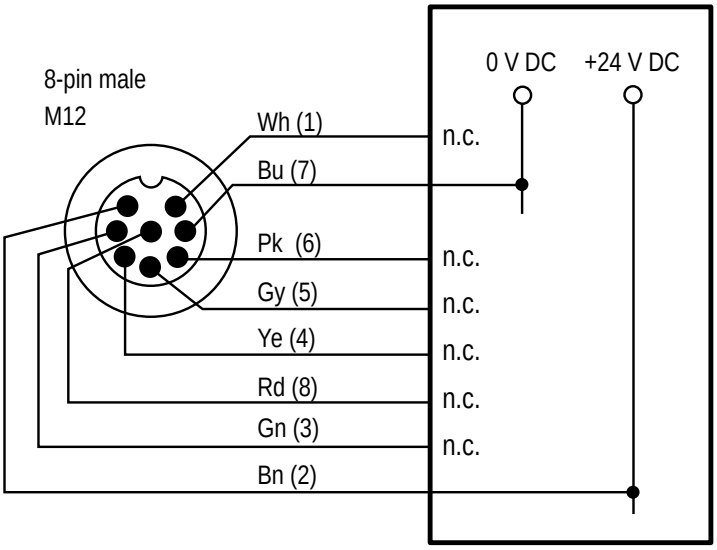

Mating SXA-xxxD Cordset Pinout			M12 Connector (female face view)
Pin	Color	Emitter Function	
1	White	no connection	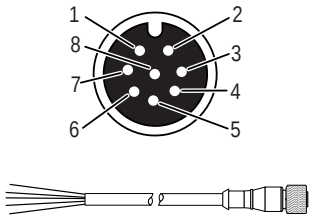
2	Brown	+ 24 V DC	
3	Green	no connection	
4	Yellow	no connection	
5	Gray	no connection	
6	Pink	no connection	
7	Blue	0 V	
8	Red	no connection	

© Banner Engineering Corp. All rights reserved.
www.bannerengineering.com

5.9.2 Generic Wiring Diagram— 5-pin Receiver and Self-checking Safety Module, Safety Controller, Safety PLC

Generic wiring for a self-checking Safety module, Safety Controller, or Safety PLC (no monitoring, automatic reset).

Figure 37. Generic 5-Pin Receiver Wiring Diagram—Self-checking Safety Module, Safety Controller, Safety PLC

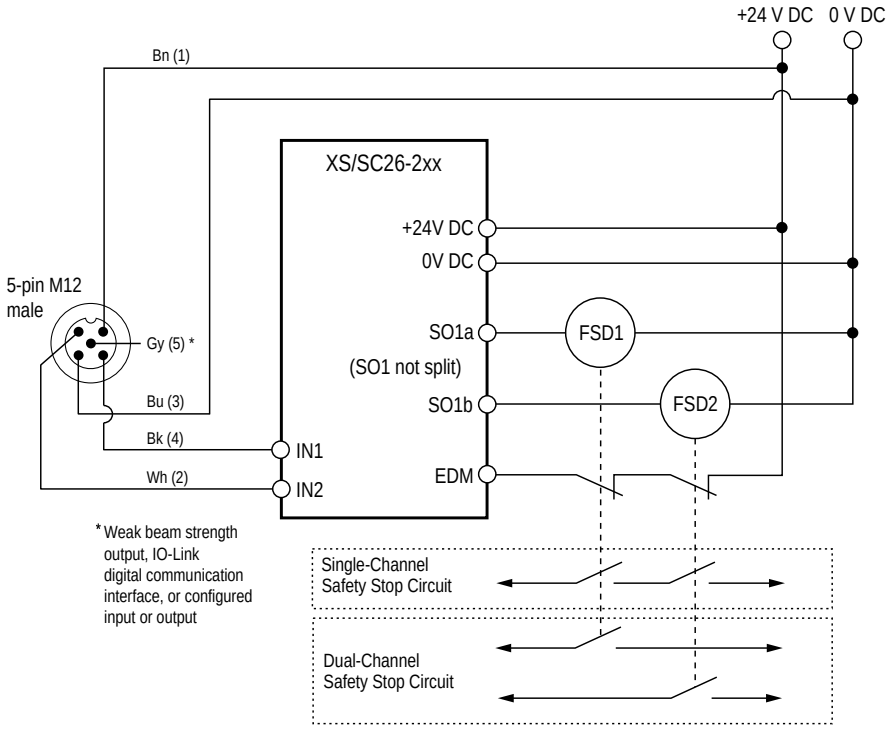

Mating BC-M12F5-22-x Cordset Pinout			M12 Connector (female face view)
Pin	Color	Receiver Function	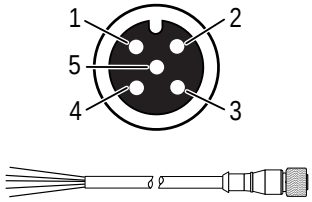
1	Brown	+ 24 V DC	
2	White	OSSD2	
3	Blue	0 V DC	
4	Black	OSSD1	
5	Gray	• Weak beam strength output • IO-Link digital communication interface • Configured input or output	

© Banner Engineering Corp. All rights reserved.
www.bannerengineering.com

5.9.3 Generic Wiring Diagram—8-pin Receiver and a Smart Device

Figure 38. Generic 8-Pin Receiver Wiring Diagram—Self-checking Safety Module, Safety Controller, Safety PLC

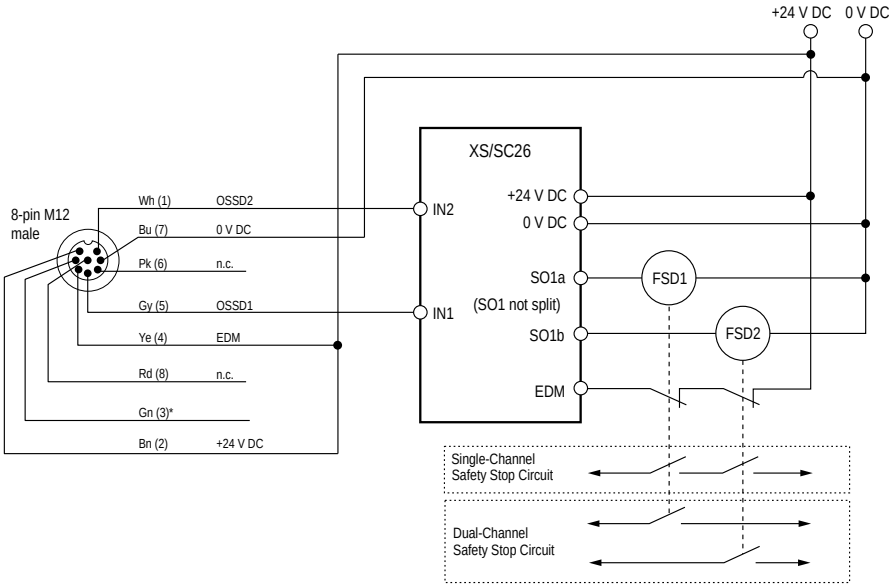

* Weak beam strength output, IO-Link digital communication interface, or configured input or output.

Mating SXA-xxxD Cordset Pinout			M12 Connector (female face view)
Pin	Color	Receiver Function	
1	White	OSSD2	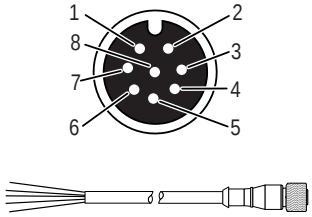
2	Brown	+ 24 V DC	
3	Green	• Weak beam strength output • IO-Link digital communication interface, • Configured input or output	
4	Yellow	EDM	
5	Gray	OSSD1	
6	Pink	no connection	
7	Blue	0 V	
8	Red	no connection	

© Banner Engineering Corp. All rights reserved.
www.bannerengineering.com

5.9.4 Generic Wiring Diagram—8-pin Receiver and Redundant FSDs

Figure 39. Generic Wiring Diagram—8-pin Receiver and Redundant FSDs

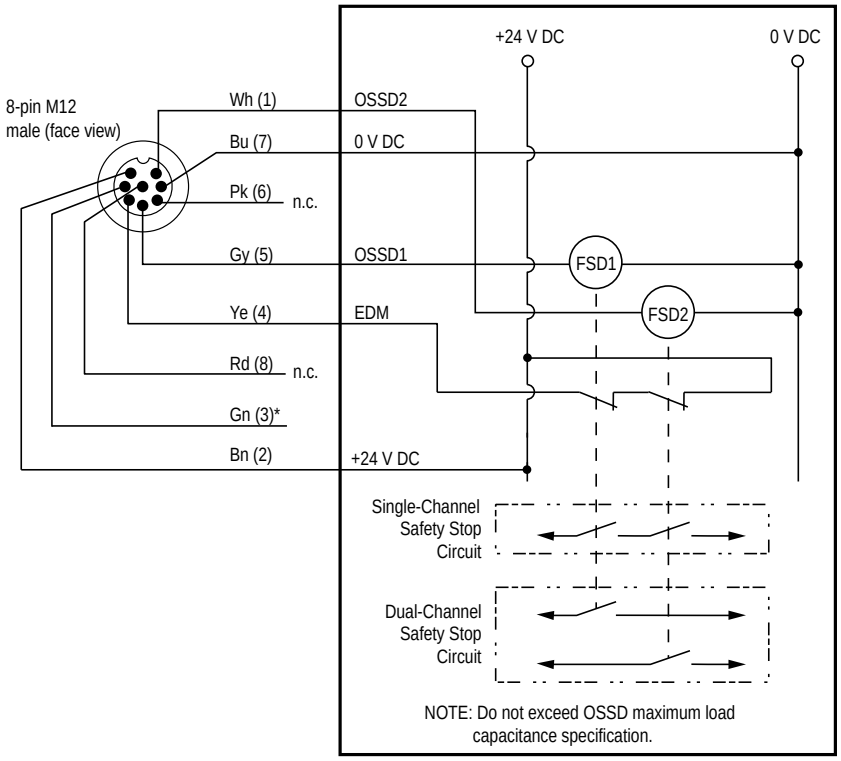

* Weak beam strength output, IO-Link digital communication interface, or configured input or output

S4B 8-Pin Wiring		
Pin	**Color**	**Receiver Function**
1	White	OSSD2
2	Brown	+ 24 V DC
3	Green	• Weak beam strength output • IO-Link digital communication interface • Configured input or output
4	Yellow	EDM
5	Gray	OSSD1
6	Pink	no connection
7	Blue	0 V
8	Red	no connection

© Banner Engineering Corp. All rights reserved.
www.bannerengineering.com

5.9.5 Generic Wiring Diagram—8-pin Receiver and IM-T-9A Interface Module

Figure 40. Generic Wiring Diagram—IM-T-9A Interface Module (one-Channel EDM)

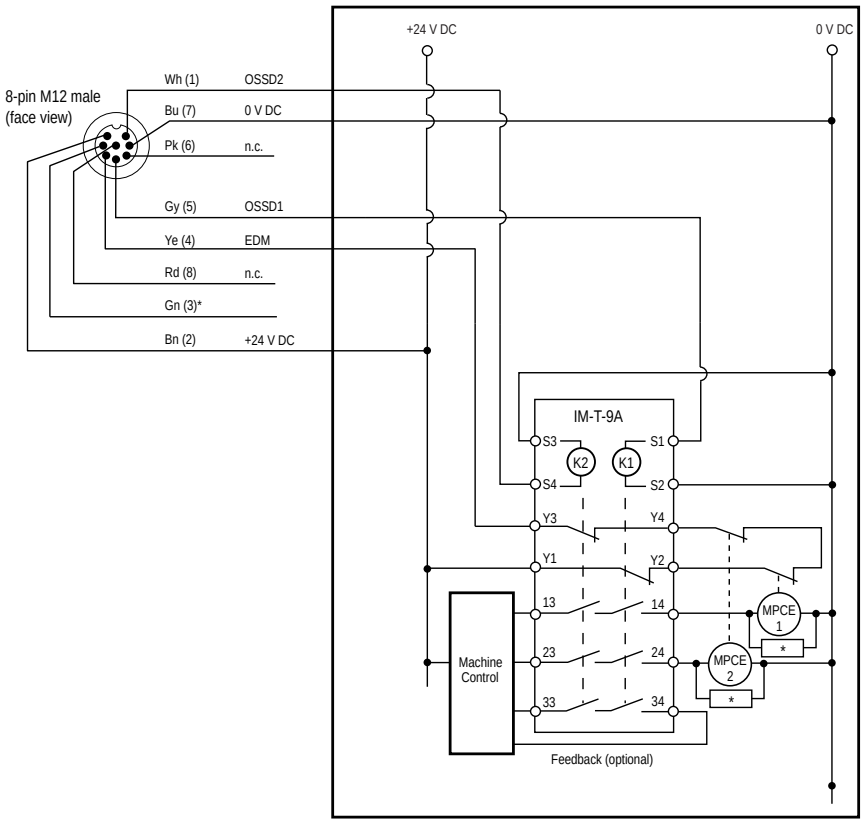

* Weak beam strength output, IO-Link digital communication interface, or configured input or output.

S4B 8-Pin Wiring		
Pin	**Color**	**Receiver Function**
1	White	OSSD2
2	Brown	+ 24 V DC
3	Green	• Weak beam strength output • IO-Link digital communication interface • Configured input or output
4	Yellow	EDM
5	Gray	OSSD1
6	Pink	no connection
7	Blue	0 V
8	Red	no connection

© Banner Engineering Corp. All rights reserved.
www.bannerengineering.com

Chapter 6 System Operation

6.1 Security Protocol

Certain procedures for installing, maintaining, and operating the S4B System must be performed by either Designated Persons or Qualified Persons.

A **Designated Person** is identified and designated in writing, by the employer, as being appropriately trained and qualified to perform system resets and the specified checkout procedures on the S4B. The Designated Person is empowered to:

- Perform manual resets and hold possession of the reset key
- Perform the Daily Checkout Procedure

A **Qualified Person**, by possession of a recognized degree or certificate of professional training, or by extensive knowledge, training, and experience, has successfully demonstrated the ability to solve problems relating to the installation of the S4B System and its integration with the guarded machine. In addition to everything for which the Designated Person is empowered, the Qualified Person is empowered to:

- Install the S4B System
- Perform all checkout procedures
- Make changes to the internal configuration settings
- Reset the System following a lockout condition

6.2 Normal Operation

6.2.1 System Power-Up

When power is applied, each sensor conducts self-tests to detect critical internal faults, determine configuration settings, and prepare the S4B for operation.

If either sensor detects a critical fault, scanning ceases, the receiver outputs remain Off and diagnostic information displays.

If no faults are detected, the S4B automatically enters Alignment mode, and the receiver looks for an optical synchronization pattern from the emitter.

If the receiver is aligned and receives the proper synchronization pattern, it enters Run mode and begins scanning to determine the blocked or clear status of each beam. No manual reset operation is required.

6.2.2 Run Mode

If any beams become blocked while the S4B is running, the receiver outputs turn Off within the stated S4B response time (see "Specifications" on page 17). If all the beams then become clear, the receiver outputs come back On. No resets are needed. All required machine control resets are provided by the machine control circuit.

Internal Faults (Lockouts): If either sensor detects a critical fault, scanning ceases, the receiver outputs turn Off and diagnostic information displays. See "Troubleshooting" on page 75 for resolution of error/fault conditions.

6.2.3 Emitter Indicators

A single Status indicator shows whether power is applied, and whether the emitter is in Run mode or a Lockout condition. Two Scan Code indicators show the scan code assigned to the emitter.

See "Status Indicators" on page 12 for additional information.

Table 17. Emitter Indicators

Emitter Operating Status	Status Indicator	Scan Code Indicator
Power-up	Red on 0.5 second, then 0.25 second off, then green on 0.5 second	Two LEDs red on, then flash green, then yellow on for 10 seconds to indicate scan code: • One yellow LED = scan code 1 • Two yellow LEDs = scan code 2

Continued on page 66

© Banner Engineering Corp. All rights reserved.
www.bannerengineering.com

Continued from page 65

Emitter Operating Status	Status Indicator	Scan Code Indicator
Run Mode	Green[7]	Off
Lockout	Flashing Red[8]	Emitter Error: Zone 2 red on, Zone 3 off Cascade Error: Zone 2 off, Zone 3 red on

6.2.4 Receiver Indicators

A single Status indicator shows when the OSSD outputs are on (green) or off (red), or the System is in a Lockout condition (flashing red).

Zone indicators show whether a section of the defined area is aligned and clear, is blocked and/or misaligned, or is a section that has a channel with a weak beam strength. All models have three Zone indicators, each of which indicates Blocked/Clear/Weak Beam Strength conditions for approximately 1/3 of the total light curtain.

See "Status Indicators" on page 12 for additional information.

Table 18. Receiver Indicators

Operating Mode	Status Indicator	Zone Indicators	OSSD Outputs
Power up	Single flash red, off, single flash green, then red for the rest of the start-up testing	Three LEDs red on, then flash green, then yellow on for 10 seconds to indicate scan code. • Zone 2 only = scan code 1 • Zone 2 and Zone 3 = scan code 2	Off
Checking cascading chain[9]	Off	Red or green	Off
Startup mode			
Cascaded host (FID 4)	Green Flashing[10]		
Alignment mode—beam 1 blocked	Red	Zone 1 red, others off	Off
Alignment mode—beam 1 clear	Red	Red or green	Off
Run mode—clear			
Non-cascade/remote	Green	Green	On
Cascade host (FID 2 or FID 3)	Green flashing[11]		
Reduced Resolution Active (FID 4)	Green Flashing[12]		
Run Mode—clear with weak beam strength			
Non-cascade/remote	Green	Green or yellow	On
Cascade host (FID 2 or FID 3)	Green flashing[13]		
Reduced Resolution Active (FID 4)	Green Flashing[14]		
Run mode—blocked			
Non-cascade/blocked remote	Red	Red or green	Off
Cascade host blocked	Red	Red or green	Off
Cascade host remote blocked	Red	Red	Off

Continued on page 67

[7] Repeating sequence of 0.5 second off, 0.25 second on, 0.25 second off, 0.25 second on; for the quantity of units in cascade chain (2 to 4) then 0.5 second off. Sequence repeats every 10 seconds.
[8] Repeating sequence of 0.75 second on then 0.25 second off.
[9] At power up if units are added to the cascade chain or normal power up (verify number of units).
[10] For first 10 seconds, repeating sequece of 0.5 seconds off, 0.25 second on, 0.25 second off, 0.25 second on, for the quantity of units in cascade chain (2 to 4) then 0.5 second off.
[11] Repeating sequence of 0.5 second off, 0.25 second on, 0.25 second off, 0.25 second on; for the quantity of units in cascade chain (2 to 4) then 0.5 second off. Sequence repeats every 10 seconds.
[12] Repeating sequence of 0.5 second on then 0.5 second off.
[13] Repeating sequence of 0.5 second off, 0.25 second on, 0.25 second off, 0.25 second on; for the quantity of units in cascade chain (2 to 4) then 0.5 second off. Sequence repeats every 10 seconds.
[14] Repeating sequence of 0.5 second on then 0.5 second off

© Banner Engineering Corp. All rights reserved.
www.bannerengineering.com

Continued from page 66

Operating Mode	Status Indicator	Zone Indicators	OSSD Outputs
Lockout mode	Red flashing(15)	Zone 1 red = Output error OR Zone 2 red = Cascade error OR Zone 3 = Receiver Error OR All Zone indicators off = Fixed blanking error See "Receiver Error Codes" on page 76 for more information.	Off
Clearing cascade chain All units	Off	Zone 1 = Off Zone 2 and 3 = Alternately flashing yellow	Off
Run Mode—clear with fixed blanked channels			
No blanking present in area	Green	Green	On
Fixed Blanked area present in area	Green	Single Flash Green(16)	On
Fixed Blanked area present in area and vibration tolerance enabled	Green	Double Flash Green(17)	On

6.2.5 Illuminated End Cap Indication (FID 4 or Later)

The following tables show the default logic for end cap illumination in FID 4 or later models.

The end cap is illuminated by default. Use the DIP switches to disable the indicator.

Table 19. Non-Cascade Units

Non-Cascade	DIP Switch Enabled	DIP Switch Disabled
Blocked	Red flashing	Off
Fault lockout	Red/yellow alternating	Off
Unblocked	Green	Off
Weak beam strength	Yellow	Off

Table 20. Cascaded Units (all FID 4 or later)

Cascade	Host	Guest 1	Guest 2	Guest 3
Host blocked	Red flashing	Red	Red	Red
Guest 1 blocked	Red	Red flashing	Red	Red
Guest 2 blocked	Red	Red	Red flashing	Red
Guest 3 blocked	Red	Red	Red	Red flashing
Fault lockout	Red/yellow alternating	Red/yellow alternating	Red/yellow alternating	Red/yellow alternating
All units unblocked	Green	Green	Green	Green
Host weak beam strength	Yellow	Green	Green	Green
Guest 1 weak beam strength	Green	Yellow	Green	Green
Guest 2 weak beam strength	Green	Green	Yellow	Green
Guest 3 weak beam strength	Green	Green	Green	Yellow

Table 21. Cascade Units with Mixed FIDs (host unit is FID 4 or later)

Guest With Earlier FID	Host	Guest 1 [No Indicator]
Host blocked	Red flashing	No Indicator
Guest 1 blocked	Red	No Indicator
Fault lockout	Red/yellow alternating	No Indicator

Continued on page 68

(15) Repeating sequence of 0.75 second on then 0.25 second off.
(16) Repeating sequence of 0.5 second on, then 0.5 second off
(17) Repeating sequence of 0.5 second on, 0.5 second off, 0.5 second on, 1.5 seconds off

© Banner Engineering Corp. All rights reserved.
www.bannerengineering.com

Continued from page 67

Guest With Earlier FID	Host	Guest 1 [No Indicator]
All units unblocked	Green	No Indicator
Host weak beam strength	Yellow	No Indicator
Guest 1 weak beam strength	Green	No Indicator

NOTE: If the outputs are OFF and the Z3 and end cap lights change only when 24 V is applied to the weak beam strength output line, check the DIP switch settings on the control board under the end cap.

6.3 Periodic Checkout Requirements

To ensure continued reliable operation, the System must be checked out periodically. Banner Engineering highly recommends performing the System checkouts as described below. However, a Qualified Person should evaluate these recommendations, based on the specific application and the results of a machine risk assessment, to determine the appropriate content and frequency of checkouts.

At every shift change, power-up, and machine setup change, the Daily Checkout should be performed; this checkout may be performed by a Designated or Qualified Person.

Semi-annually, the System and its interface to the guarded machine should be thoroughly checked out; this checkout must be performed by a Qualified Person (see "Schedule of Checkouts" on page 86). A copy of these test results should be posted on or near the machine.

Whenever changes are made to the System (either a new configuration of the S4B System or changes to the machine), perform the Commissioning Checkout (see "Commissioning Checkout" on page 58).

Verify Proper Operation The S4B can operate as it is designed only if it and the guarded machine are operating properly, both separately and together. It is the user's responsibility to verify this, on a regular basis, as instructed in "Schedule of Checkouts" on page 86. Failure to correct such problems can result in an increased risk of harm. Before the System is put back into service, verify that the S4B System and the guarded machine perform exactly as outlined in the checkout procedures and any problem(s) are found and corrected.

6.4 Factory Default Settings

Note that all DIP switches come from the factory in the left (off) position.

Setting	Factory Default
Scan Code	Scan Code 1
Reduced Resolution	Off
Receiver lighted end cap	Enabled • All beams clear: Green • Beams blocked: Flashing Red • Unit Faulted: Red/Yellow Alternating • Weak Beam Strength: Yellow
Configurable I/O pin	Weak beam

© Banner Engineering Corp. All rights reserved.
www.bannerengineering.com

Chapter 7 IO-Link Overview

IO-Link®[18] is an open standard serial communication protocol that allows for the bi-directional exchange of data from IO-Link-supported devices, such as sensors, that are connected through IO-Link. For the latest IO-Link protocol and specifications, please visit http://www.io-link.com.

Advantages to an IO-Link system include standardized wiring, remote configuration, simple device replacement, advanced diagnostics, and increased data availability. Because IO-Link is an open standard, the devices can be integrated in almost any fieldbus or automation system.

An IO-Link system consists of an IO-Link master and an IO-Link device such as a sensor, lighting product, IO-Link hub, or actuator.

The functions and parameters of the IO-Link devices are represented in a device description file (IODD). IODD files contain information about identification, device parameters, process and diagnostic data, communication properties, and other details. The IODD files for Banner IO-link devices can be downloaded for free on www.bannerengineering.com. For a list of supporting files, please refer to "Supporting Files" on page 87.

7.1 IO-Link Capabilities

When using IO-Link, the following non-safety options can be configured.

The weak beam strength output pin can be used an IO-Link connection. If the pin sees IO-Link data traffic, it becomes an IO-Link connection point. An adapter changes the IO-Link signal from pin 4 (IO-Link side) to pin 5 of the 5-pin RD or pin 3 of the 8-pin RD.

Via IO-Link, the default color settings of the receiver end cap or the function of the weak beam strength output can be changed to match the user requirements. The options include:

- Changing the default colors (clear, blocked, and weak beam strength) to match user requirements/desires
- Changing the weak beam strength output to an end cap color override signal to force the LED color to a new color, such as white (or amber), for a muted state

CAUTION:
- Misunderstanding of indicator colors
- Personnel may not understand the status of the safety system, which could lead to injury.
- Evaluate changes to the default colors of the receiver lighted end cap against the overall safety plan of the application. Clearly communicate the meanings of the colors to all personnel.

- Setting the end cap colors the same or different for each receiver in a cascade chain
- Changing the weak beam strength output to an auxiliary output to follow the state of the OSSDs
- Setting the functionality of the weak beam strength output (as weak beam or auxiliary) as PNP (default) or NPN

CAUTION: Either as a weak beam strength or auxiliary output, this output is only for status (non-safety)!

During operation, IO-Link can be used to obtain information from the unit. In addition to standard process data, the following information can be obtained:

- First blocked beam
- Number of blocked beams
- Measurement of the blocked area

This information is available for all receivers in a cascade chain.

[18] IO-Link® is a registered trademark of PROFIBUS Nutzerorganisation e.V.

© Banner Engineering Corp. All rights reserved.
www.bannerengineering.com

See the S4B IO-Link Data Reference Guide (p/n 256017) for additional details.

7.2 IO-Link Interface

For the latest IO-Link protocol and specifications, see www.io-link.com.

Each IO-Link device has an IODD (IO Device Description) file that contains information about the manufacturer, article number, functionality etc. This information can be easily read and processed by the user. Each device can be unambiguously identified via the IODD as well as via an internal device ID. Download the S4B's IO-Link IODD package (p/n 255907) from Banner Engineering's website at www.bannerengineering.com.

Banner has also developed Add On Instruction (AOI) files to simplify ease-of-use between the S4B, multiple third-party vendors' IO-Link masters, and the Logix Designer software package for Rockwell Automation PLCs. Three types of AOI files for Rockwell Allen-Bradley PLCs are listed below. These files and more information can be found at www.bannerengineering.com.

Process Data AOIs—These files can be used alone, without the need for any other IO-Link AOIs. The job of a Process Data AOI is to intelligently parse out the Process Data word(s) in separate pieces of information. All that is required to make use of this AOI is an EtherNet/IP connection to the IO-Link Master and knowledge of where the Process Data registers are located for each port.

Parameter Data AOIs—These files require the use of an associated IO-Link Master AOI. The job of a Parameter Data AOI, when working in conjunction with the IO-Link Master AOI, is to provide quasi-realtime read/write access to all IO-Link parameter data in the sensor. Each Parameter Data AOI is specific to a given sensor or device.

IO-Link Master AOIs—These files require the use of one or more associated Parameter Data AOIs. The job of an IO-Link Master AOI is to translate the desired IO-Link read/write requests, made by the Parameter Data AOI, into the format a specific IO-Link Master requires. Each IO-Link Master AOI is customized for a given brand of IO-Link Master.

Add and configure the relevant Banner IO-Link Master AOI in your ladder logic program first; then add and configure Banner IO-Link Device AOIs as desired, linking them to the Master AOI as shown in the relevant AOI documentation.

7.3 IO-Link Configuration Software

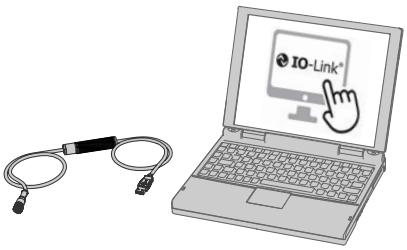

Banner's IO-Link Configuration Software provides an easy way to configure Banner IO-Link masters and connected IO-Link devices, giving users full control over master, port, and device settings.

The software enables users to configure port settings for Banner serial and Ethernet IO-Link masters, including each port's operating mode and associated SIO (discrete input or output) behavior. It also supports configuration of IP address settings for Banner Ethernet IO-Link masters and allows users to configure Banner IO-Link devices connected to the master.

Download the free IO-Link Configuration Software at https://www.bannerengineering.com/us/en/products/software/io-link-software.html.

For instructions on how to use the software to configure IO-Link port settings and IO-Link devices connected to the IO-Link master, use the IO-Link Configuration Software Instruction Manual available from the software by going to **Help › Help File**. The IO-Link Configuration Software Instruction Manual (p/n 228876) can also be downloaded directly from www.bannerengineering.com.

7.4 Generic IO-Link Wiring

The following examples use the 5-pin IO-Link adaptor or the 8-pin IO-Link adaptor.

© Banner Engineering Corp. All rights reserved.
www.bannerengineering.com

7.4.1 5-Pin IO-Link Adaptor Example

Figure 41. Wiring Example Using 5-Pin IO-Link Adaptor

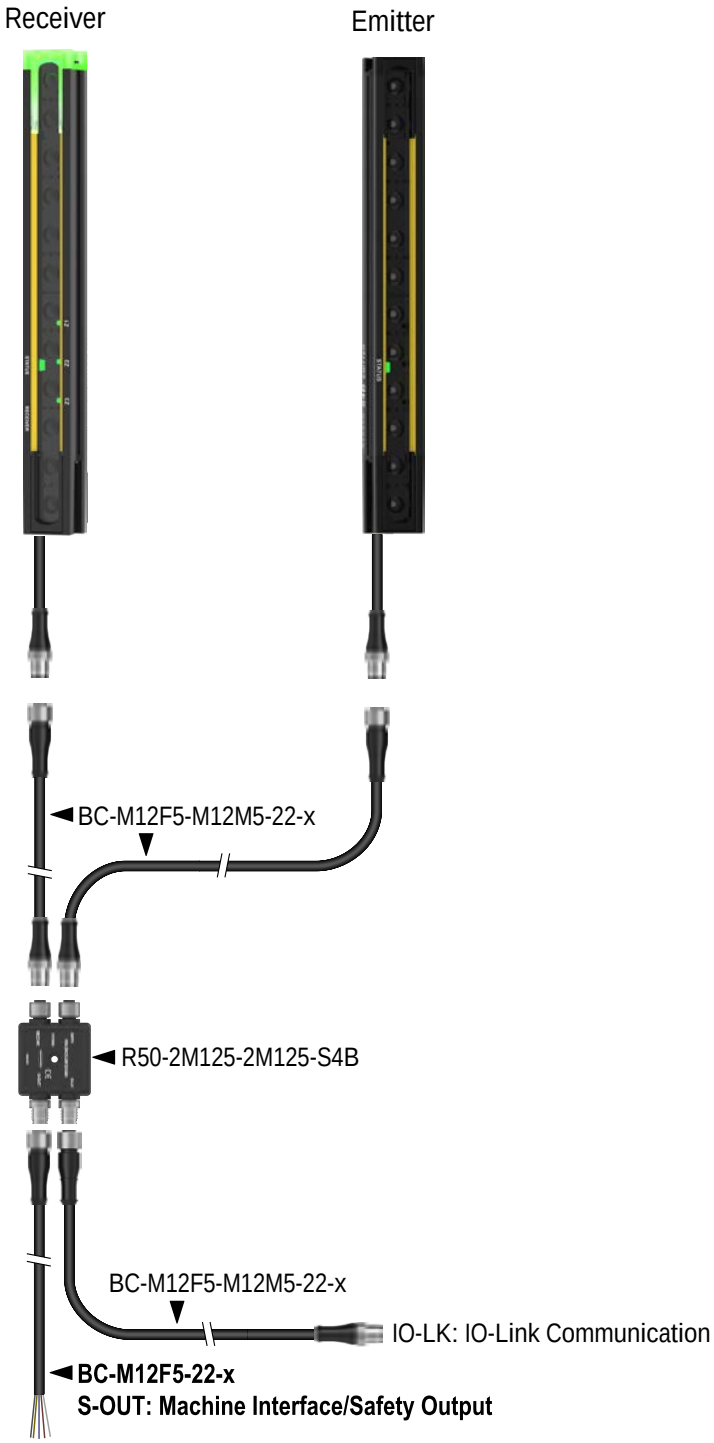

© Banner Engineering Corp. All rights reserved.
www.bannerengineering.com

Figure 42. R50-2M125-2M125-S4B



Table 22. 5-Pin Wiring

Pin	Color	Receiver Function (RECVR)	Emitter Function (EMTR)	IO-Link Output (IO-LK)	Machine Interface (S-OUT)	Pinout
1	Brown	+24 V DC	+24 V DC	no connection	+24 V DC	Female 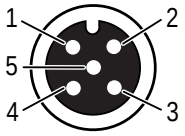 Male 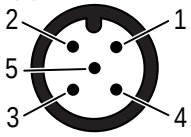
2	White	OSSD2	no connection	no connection	OSSD2	
3	Blue	0 V DC	0 V DC	0 V DC	0 V DC	
4	Black	OSSD1	no connection	• Weak beam strength output • IO-Link digital communication interface • Configured input or output[19]	OSSD1	
5	Gray	• Weak beam strength output • IO-Link digital communication interface • Configured input or output	no connection	no connection	no connection	

[19] Never use Pin 4 in place of an OSSD Safety output.

© Banner Engineering Corp. All rights reserved.
www.bannerengineering.com

7.4.2 8-Pin IO-Link Adaptor Example

Figure 43. Wiring Example Using 8-Pin IO-Link Adaptor

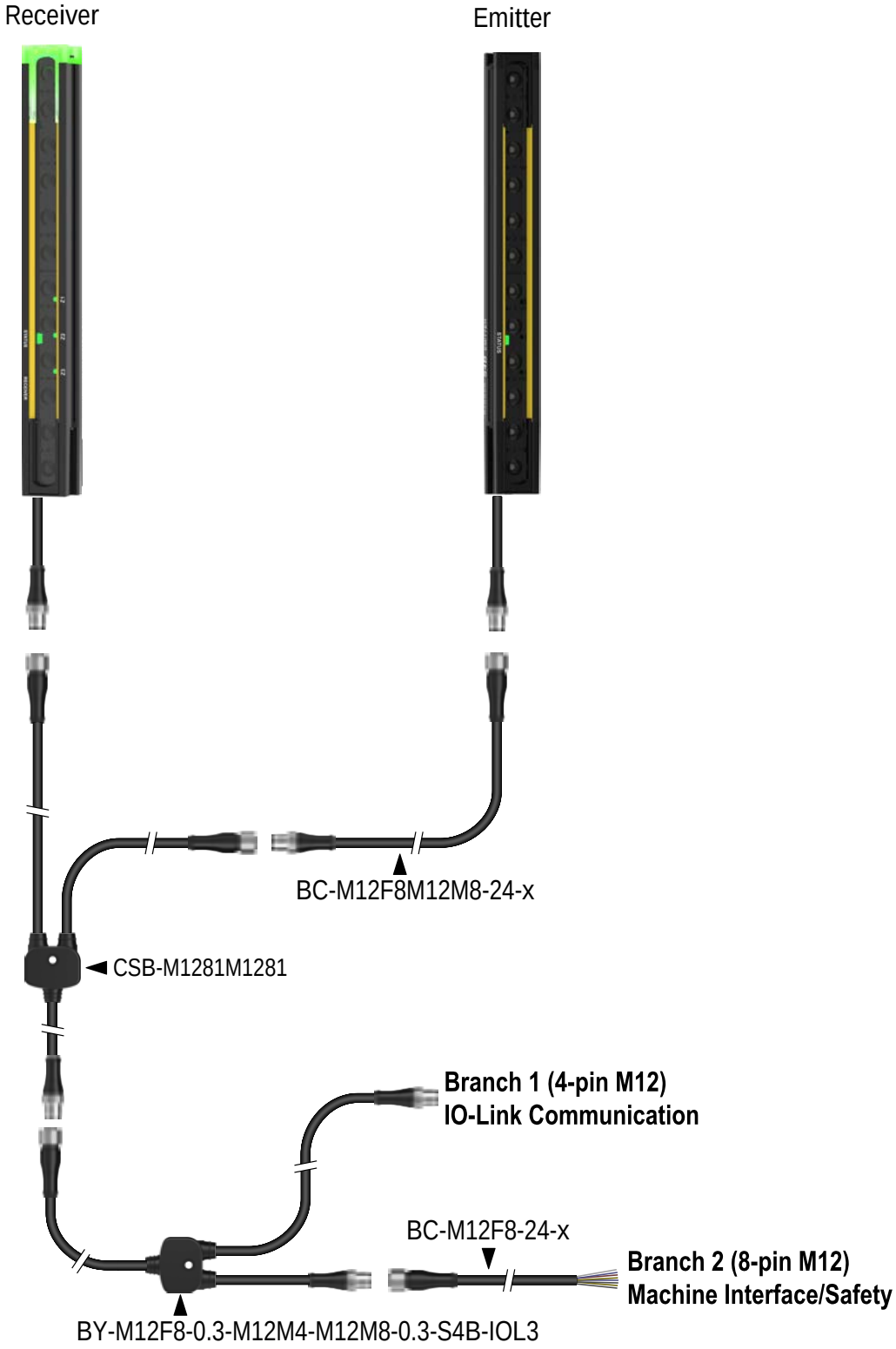

© Banner Engineering Corp. All rights reserved.
www.bannerengineering.com

Table 23. Trunk—Emitter and Receiver Connection

S4B 8-Pin Wiring		
Pin	**Color**	**Receiver Function**
1	White	OSSD2
2	Brown	+ 24 V DC
3	Green	• Weak beam strength output • IO-Link digital communication interface • Configured input or output
4	Yellow	EDM
5	Gray	OSSD1
6	Pink	no connection
7	Blue	0 V
8	Red	no connection

Table 24. Branch 1—IO-Link Communication Output

Mating BC-M12F4-22-x Cordset Pinout			M12 Connector (female face view)
Pin	**Color**	**Receiver Function**	
1	Brown	no connection	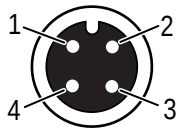
2	White	no connection	
3	Blue	0 V DC	
4	Black	• Weak beam strength output • IO-Link digital communication interface • Configured input or output[20]	

Table 25. Branch 2—Machine Interface/Safety Output

S4B 8-Pin Wiring		
Pin	**Color**	**Receiver Function**
1	White	OSSD2
2	Brown	+ 24 V DC
3	Green	no connection
4	Yellow	EDM
5	Gray	OSSD1
6	Pink	no connection
7	Blue	0 V
8	Red	no connection

[20] Never use Pin 4 in place of an OSSD Safety output.

© Banner Engineering Corp. All rights reserved.
www.bannerengineering.com

Chapter 8 Troubleshooting

8.1 Lockout Conditions

A Lockout condition causes both S4B OSSD outputs to turn off or remain off, sending a stop signal to the guarded machine.

Each sensor provides diagnostic error codes to identify the cause(s) of lockouts.

The following tables indicate a sensor lockout condition:

Emitter Lockout Conditions	
Status indicator	Flashing red
Zone indicators	See "Emitter Error Codes" on page 75

Receiver Lockout Conditions	
Status indicator	Flashing red
End Cap indicator (at default settings), FID4 and later	Flashing red/yellow
Zone indicators	See "Receiver Error Codes" on page 76

To recover from a Lockout condition, correct all errors and cycle power to the device.

8.2 Emitter Error Codes

Indicators	Error Description	Appropriate Action
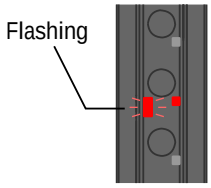 The Status indicator flashes red and Zone 2 indicator is red.	**Emitter error** occurs because of excessive electrical noise or an internal failure.	• Perform a reset per Checkout Procedures: Daily Checkout Procedure. • If the error clears, perform a Daily Checkout procedure. If the System checks out, resume operation. If the System fails the Daily Checkout Procedure, replace the emitter. • If the error clears, check the external connections and configuration settings. • If the error continues, replace the emitter.
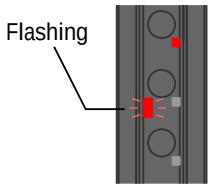 The Status indicator flashes red and the Zone 3 indicator is red.	**Cascade error** occurs when the number of units in the cascade chain has been reduced (a unit was removed).	• Verify that no cables have been damaged. • Verify the cascade chain is properly terminated (the last guest has a DES4-M51-RTD end cap or an S4BA-RTP-1 is attached to the open cable). • If the error continues, replace the emitter.

© Banner Engineering Corp. All rights reserved.
www.bannerengineering.com

8.3 Receiver Error Codes

Indicators	Error Description	Appropriate Action
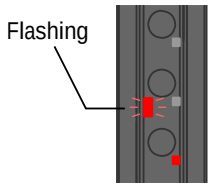 The Status indicator flashes red and the Zone 1 indicator is red.	**Output error** caused by: • One or both outputs being shorted to a power supply (high or low) • Shorting OSSD 1 to OSSD 2 • An overload (greater than 0.5 A)	• Disconnect the OSSD loads and reset the receiver. • If the error clears, the problem is in the OSSD load(s) or in the load wiring. • If the error continues with no load connected, replace the receiver. • Verify that the EDM line (yellow wire, pin 4) has +24 V DC when the outputs are off.
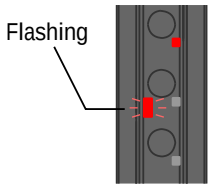 The Status indicator flashes red and the Zone 3 indicator is red.	**Receiver error** occurs because of excessive electrical noise or an internal failure.	• Perform a reset per Checkout Procedures: Daily Checkout Procedure. • If the error clears, perform a Daily Checkout procedure. If the System checks out, resume operation. If the System fails the Daily Checkout Procedure, replace the receiver. • If the error clears, check the external connections and configuration settings. • If the error continues, replace the receiver.
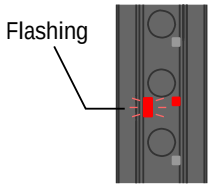 The Status indicator flashes red and the Zone 2 indicator is red.	**Cascade error** occurs when the number of units in the cascade chain has been reduced (a unit was removed).	• Determine where the unit was removed and restore it to the cascade system. • Verify that no cables have been damaged. • Clear the cascade system according to "Reduce the Number of Units in a Cascade Chain" on page 81 section. • Verify the cascade chain is properly terminated (the last guest has a DES4-M51-RTD end cap or an S4BA-RTP-1 is attached to the open cable). • If the error continues, replace the receiver.
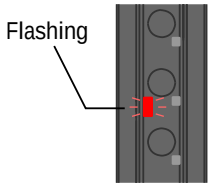 The Status indicator flashes red and the Zone indicators are off.	**Fixed blanking error** occurs when a blanked beam is clear (the obstruction that requires fixed blanking has been removed).	• If the obstruction needs to be removed and remain removed, reprogram the units using the S4BA-RFB. • If the obstruction was mistakenly removed and is returned to its original position, perform a power cycle to resolve the lockout. • If the obstruction needs to be positioned differently, reprogram the units using the S4BA-RFB.
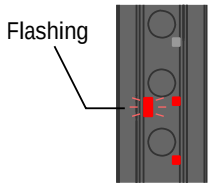 Zone 1 and Zone 2 LEDs are on.	**Reduced resolution error** occurs when both of the reduced resolution switches are not in the same position (one on and one off).	• Make sure that DIP switches 1 and 4 are set to the same side (right (on) = enabled, left (off) = disabled) • If the error continues, replace the receiver.

8.4 Electrical and Optical Noise

The S4B is designed and manufactured to be highly resistant to electrical and optical noise and to operate reliably in industrial settings. However, serious electrical and/or optical noise may cause a random nuisance trip.

In extreme electrical noise cases, a Lockout is possible. To minimize the effects of transitory noise, the S4B responds to noise only if the noise is detected on multiple consecutive scans. If random nuisance trips occur, check the following:

- Optical interference from adjacent light curtains or other photoelectrics

© Banner Engineering Corp. All rights reserved.
www.bannerengineering.com

- Sensor input or output wires routed too close to noisy wiring

8.4.1 Checking for Sources of Electrical Noise

All S4B wiring is low voltage; running these wires alongside power wires, motor/servo wires, or other high-voltage wiring can inject noise into the S4B System. It is good wiring practice (and may be required by code) to isolate S4B wires from high-voltage wires.

1. Use the Banner model BT-1 Beam Tracker Alignment Aid (see "Accessories" on page 91) to detect electrical transient spikes and surges.
2. Cover the lens of the BT-1 with electrical tape to block optical light from entering the receiver lens.
3. Press the RCV button on the BT-1 and position the BT-1 on the wires going to the S4B or any other nearby wires.
4. If the BT-1's indicator turns on, check for sources of electrical noise and separate the S4B cordset from any high-voltage wiring, if applicable.
5. Install proper transient suppression across the load to reduce the noise.

8.4.2 Check for Sources of Optical Noise

1. Turn off the emitter or completely block the emitter.
2. Press the RCV button on the Banner BT-1 Beam Tracker Alignment Aid and move it across the full length of the receiver’s sensing window to check for light at the receiver.
3. If the BT-1’s indicator turns on, check for emitted light from other sources (other safety light curtains, grids or points, or standard photoelectric sensors).

© Banner Engineering Corp. All rights reserved.
www.bannerengineering.com

Chapter 9 Cascade

9.1 Overview of Cascading

All FID 2 or later S4B emitters and receivers can be used as a standalone unit or as part of a cascade chain. The determining factor is the RD (removable disconnect) cordset used with the unit.

The cascaded sensor pairs can be any length, any number of beams, or have different resolutions (14 mm or 30 mm), as long as each emitter matches its receiver.

The control reliability, installation and alignment, electrical interface to the guarded machine, initial checkout, periodic checkout, troubleshooting and maintenance features of cascadeable models are functionally identical to those of the standard models.

Make a cascade interconnection by using the appropriate RD cordsets (one for host, one for middle remotes, one for last remote), see "Accessories" on page 91. All receivers in a cascade activate the same set of output signal switching device (OSSD) outputs: the OSSDs of the host receiver.

NOTE: In a cascaded system, all receivers are connected together, and all emitters are connected together.

WARNING:

- **Adjacent components can synchronize incorrectly**
- The light curtain's safety function is reduced when components are not synchronized correctly, creating an unsafe condition that could result in serious injury or death.
- When multiple systems are mounted closely together, or where a secondary emitter is in view (within ±5°) and within range of an adjacent receiver, a receiver can synchronize to the signal from the wrong emitter, reducing the safety function of the light curtain.

WARNING:

- **Use a scan code**
- If you do not use a scan code, a receiver can synchronize to the signal from the wrong emitter, reducing the safety function of the light curtain and creating an unsafe condition that could result in serious injury or death.
- Configure adjacent systems to use different scan codes (for example, set one system to use scan code 1 and the other system to use scan code 2). Perform a trip test to confirm the light curtain function.

© Banner Engineering Corp. All rights reserved.
www.bannerengineering.com

Figure 44. Light curtains guarding a robotic cell

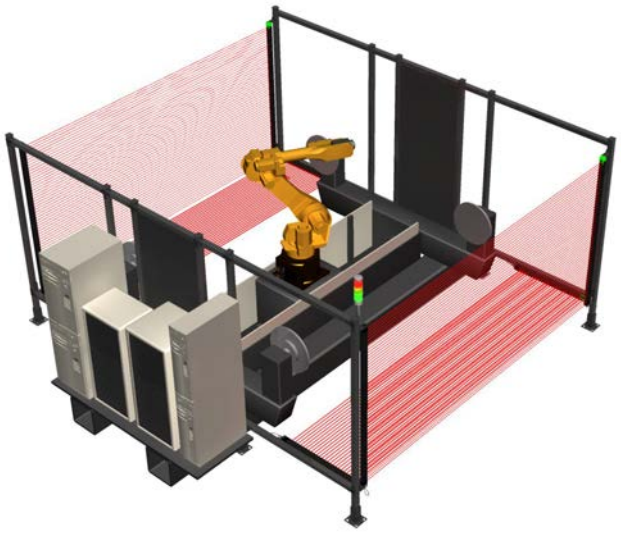

Figure 45. Cascaded light curtains guarding a u-shaped cell



9.1.1 System Components and Specifications

A multiple-light curtain cascaded S4B system includes:

- Compatible emitter/receiver pairs (up to four)
- Two terminal RD (removable disconnect) cordsets for the last emitter and receiver in the cascade (ordered separately)
- Two RD cordsets and cables to interface with the machine and provide power to the system
- Pairs of double-ended (sensor interface) cables to interconnect the emitters and the receivers in the cascade
- A remote/host RD cordset for each center sensor (and double-ended cables if more than 0.61 m (2 ft) is needed) to interconnect the emitters and receivers in the cascade chain

For RD models and cascade RD kits, see "RD Cordsets—FID 2 or Later Models" on page 93.

Additional cordsets may be used to enable quick disconnect (QD) connections; see "Cordsets" on page 94.

Available single-ended, double-ended, and splitter cordsets are listed in "Cordsets" on page 94. Cordset lengths are limited—for both the machine interface/power cables and the sensor interconnect cables. See "Determining Interconnect Cordset Lengths" on page 82 for more information.

© Banner Engineering Corp. All rights reserved.
www.bannerengineering.com

9.2 Cascade System Wiring

All the cascade system wiring is performed by properly connecting the quick disconnect (QD) connectors of the RD cordsets (and doubled ended cables as needed for spacing). The cascade system consists of two separate channels; one channel is a chain of emitters and the other channel is a chain of receivers.

Figure 46. Wiring (FID4 and later sensors shown)

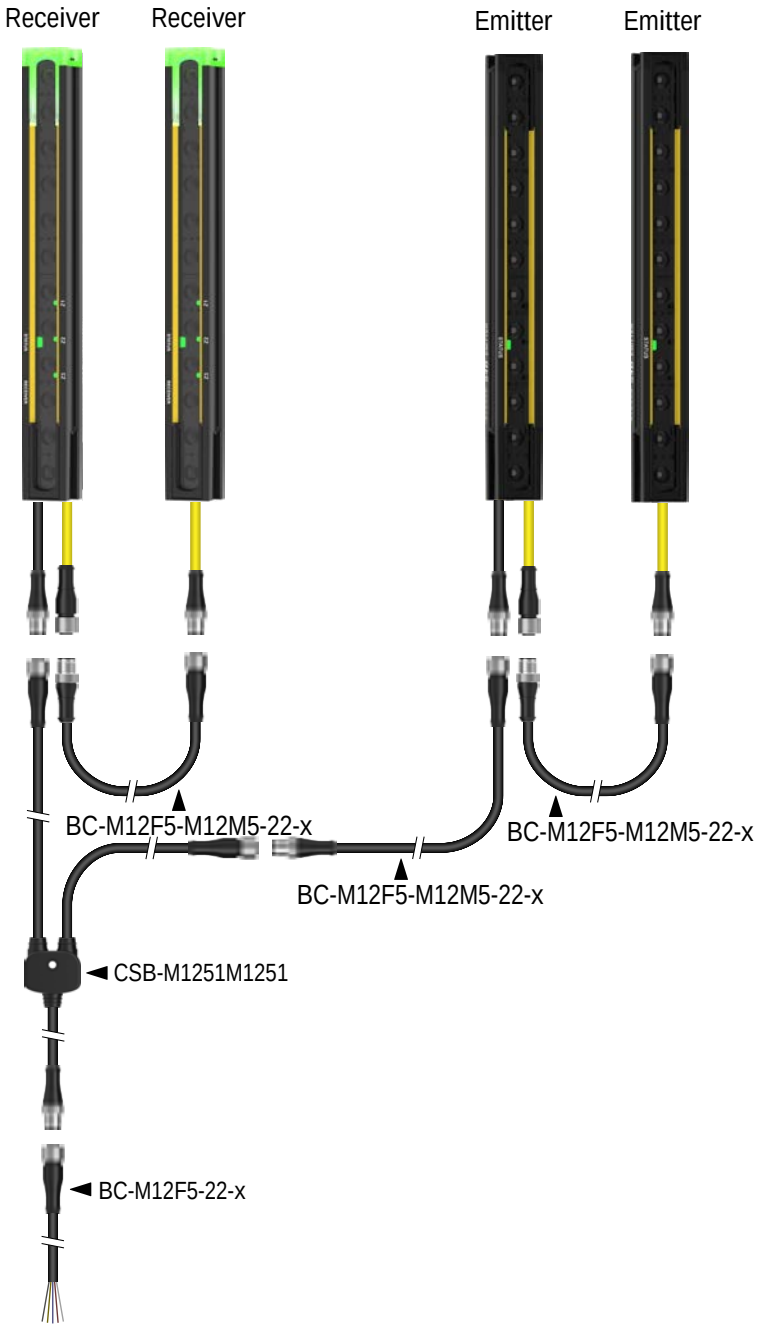

Connect the DES4 cables to the appropriate units. Then connect the female QD of the host emitter to the male QD of the guest emitter. Connect the female QD of the host receiver to the male QD of the guest receiver. If more than two sensors are in a chain, continue the process of connecting female QDs to male QDs ensuring the emitters are connected to emitters and receivers are connected to receivers.

© Banner Engineering Corp. All rights reserved.
www.bannerengineering.com

9.3 Configuring Cascade Systems

9.3.1 Initial Configuration or Add Units to the Cascade Chain

With power off, set up the cascade system.

All FID 2 or later S4B systems can be set up in a cascade system by using the appropriate RD (removable disconnect) cordset. See "Accessories" on page 91 for various RD cordset models and kits for cascade systems of two, three, or four units.

Figure 47. Cascade Connections

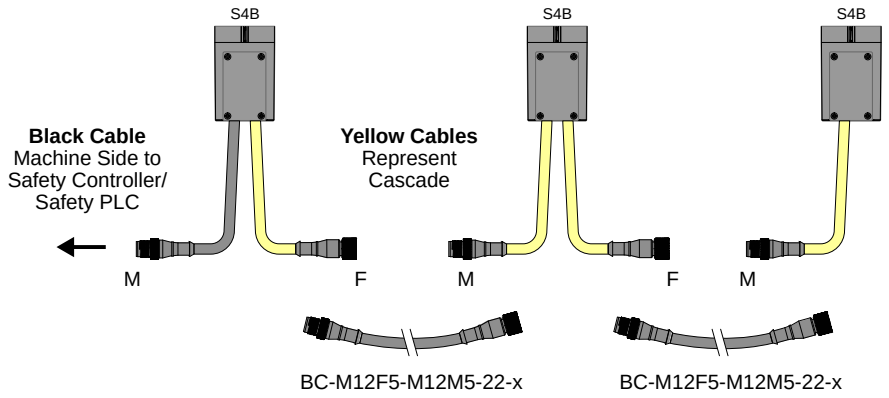

The machine interface cable is a black male 5- or 8-pin cable branch. All cascading cables are yellow 5-pin cable branches. The RD cordset of the host unit has a yellow female 5-pin cable branch for cascading. Each guest/remote sensor used in the center of a cascade system of three or four units needs a RD cordset that has two yellow 5-pin cable branches, one male and one female. The last unit in the cascade chain, terminal remote/guest, uses a terminal RD cordset which has one 5-pin male cable branch. The male/female is to ensure correct wiring of the system.

When the system powers on, it learns the number of units in the system. Once learned (less than a second), it enters run mode.

Every time the system powers on, it checks the number of units in the cascade system. If the number is as previously taught, it immediately enters run mode. If the number increases, it learns the new higher number and then enters run mode. If the number of units decreases, the system goes into a lockout state.

9.3.2 Reduce the Number of Units in a Cascade Chain

To reduce the number of units in a cascade chain, the existing configuration must be cleared.

To clear the existing configuration:

1. Remove the RD (removable disconnect) cordset on the host receiver unit.
2. Set the switch to the clear cascade configuration setting by moving switch 2 to the right:

Figure 48. Set the Switches

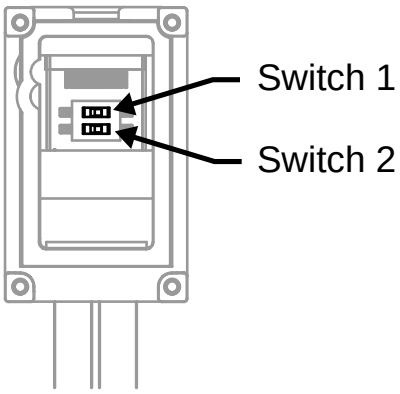

© Banner Engineering Corp. All rights reserved.
www.bannerengineering.com

3. Return the RD cordset to the host unit.
4. Make sure the chain has been reduced to the appropriate number of units.
5. Turn power on to the system.

   All receivers in the system should flash the Clearing Cascade Chain sequence—Zone 2 and Zone 3 indicator LEDs flashing yellow alternately for approximately 10 seconds.
6. Turn off power to the system.
7. Remove the RD cordset from the host unit again.
8. Move switch 2 to the left position (run mode).
9. Reinstall the RD cordset on the host unit.
10. Tighten the four screws to 0.25 Nm (2.2 in-lbs).
11. Turn on the power to the system.

    The system enters run mode.

9.4 Determining Interconnect Cordset Lengths

The following cordset length chart lists the maximum machine interface cable length assuming the interconnection cable between cascaded systems uses the BC-M12F5-M12M5-22-10 cable (10 m (32.8 ft)). As the machine interface cordset lengthens, the voltage available at the first (host) sensor pair decreases, which results in even lower voltages at the remote/guest receivers. The lengths noted are maximum lengths to ensure that the last cascaded sensor's supply voltage requirements are maintained.

Table 26. Maximum machine interface cable length versus total load current (OSSDs)

Maximum Machine Interface Cordset Length with S4BA-RFB Installed					
Total Load Current (OSSD 1 + OSSD 2)					
Devices Installed	**0.1 A**	**0.25 A**	**0.5 A**	**0.75 A**	**1.0 A**
Host + RFB	54.9 m (180 ft)	42.7 m (140 ft)	30.5 m (100 ft)	24.4 m (80 ft)	19.8 m (65 ft)
Host + 1 Guest + RFB	30.5 m (100 ft)	24.4 m (80 ft)	19.8 m (65 ft)	16.8 m (55 ft)	13.7 m (45 ft)
Host + 2 Guest + RFB	16.8 m (55 ft)	13.7 m (45 ft)	12.2 m (40 ft)	10.7 m (35 ft)	9.1 m (30 ft)
Host + 3 Guest + RFB	7.6 m (25 ft)	6.1 m (20 ft)	6.1 m (20 ft)	4.6 m (15 ft)	4.6 m (15 ft)

NOTE: Emitter and receiver power (current) requirements are accounted for. The above values represent additional current draw that must be accounted for.

NOTE: Maximum cordset lengths are intended to ensure that adequate power is available to the S4B System when the supply is operating at +20 V DC. Values in the previous table are worse case. Contact Banner Engineering if there are any questions.

NOTE: The length of Emitter machine interface cordsets can be two times longer than those listed for the receiver in the table above if a CSB Splitter cordset is not used. If a CSB Splitter cordset is used, connect one branch of the CSB splitter to the receiver and other branch to the emitter via BC-M12F5-M12M5-22-x double-ended cordset up to the same length listed in the table above.

NOTE: In determining these maximum machine interface cable lengths, the BC-M12F5-M12M5-22-10 cable was used as the interconnection between system in the cascade chain (10 m (32.8 ft)).

NOTE: The use of the S4BA-RFB reduces the maximum Machine Interface Cable length. With the S4BA-RFB mounted between receivers of a cascade system via BC-M12F5-M12M5-22-x cables the maximum cable lengths are listed in "Maximum machine interface cable length versus total load current (OSSDs)" on page 82.

© Banner Engineering Corp. All rights reserved.
www.bannerengineering.com

9.5 Response Time for Cascaded Light Curtains

Response time is an important factor in determining the safety distance (minimum distance) of a light curtain.

For cascaded S4B Systems, that response time is dependent on the number of light curtains, length and resolution of the light curtains, and their positions in the cascade chain. The response time can be calculated in three ways:

- Based on the worst-case S4B System response time for the entire cascade chain (S4BR14-1800-S has a response time of 43 ms); all light curtains in the cascade system have the same safety distance
- Based on the slowest response of the actual receivers used in the S4B cascade System; all light curtains in the cascade system have the same safety distance
- Individually for each light curtain in the cascade system; the safety distance is calculated for each light curtain in the cascade system

NOTE: For all cascade systems, the response time of the host receiver is not affected by the cascade response delay when cascading receivers to it. The hosts response time is always its response time when blocked.

WARNING:

- **Properly install the device**
- Failure to follow the installation instructions can result in ineffective or non-operation of the Banner device, which could create an unsafe condition resulting in serious injury or death.
- Follow all installation instructions.

9.5.1 Determining Worst Case System Response Time

If the safety distance is not important, that is, the light curtains will be mounted well beyond the safety distance, the worst-case timing can be used.

This worst case is based on the S4B receiver with the slowest response time. For 14 mm resolution models, this is the S4BR14-1800-S, which has a 43 ms response time. For 30 mm resolution models, this is the S4BR30-1800-S, which has a response time of 20 ms. In the safety distance formula, Tr is the response time of the light curtain:

```
Ds = K(Ts + Tr) + Dpf
```

If the cascade system has one guest/remote receiver, the worst-case response time is Tr for a two-receiver cascade system and is:

- 58 ms for 14 mm resolution units
- 35 ms for 30 mm resolution units

If the cascade system has two guest/remote receivers, the worst-case response time is Tr for a three-receiver cascade system and is:

- 63 ms for 14 mm resolution units
- 40 ms for 30 mm resolution units

If the cascade system has three guest/remote receivers, the worst-case response time is Tr for a four-receiver cascade system and is:

- 68 ms for 14 mm resolution units
- 45 ms for 30 mm resolution units

Remember, the response time of the host receiver is not affected by the cascade response delay when cascading receivers to it. The hosts response time is always its response time when blocked.

9.5.2 Determining System Response Time

If the safety distance does not need to be optimized (at a minimum), determine the receiver with the longest response time Tr(max), and then add the cascade delay time to its response time.

```
Ds = K(Ts + Tr) + Dpf
```


© Banner Engineering Corp. All rights reserved.
www.bannerengineering.com

If the cascade system has one guest/remote receiver, the cascade response time delay is 15 ms. Therefore, for a two-receiver cascade system:

$$Tr = Tr_{(max)} + 15\ ms$$

If the cascade system has two guest/remote receivers, the cascade response time delay is 20 ms. Therefore, for a three-receiver cascade system:

$$Tr = Tr_{(max)} + 20\ ms$$

If the cascade system has three guest/remote receivers, the cascade response time delay is 25 ms. Therefore, for a four-receiver cascade system:

$$Tr = Tr_{(max)} + 25\ ms$$

Remember, the response time of the host receiver is not affected by the cascade response delay when cascading receivers to it. The hosts response time it always its response time when blocked.

9.5.3 Individual Response Time and Safety (Minimum) Distance

When calculating the individual safety distance for each emitter/receiver pair, the pair's position (host or guest) in the cascade affects its response time, which then affects its safety distance (see safety distance formulas in "Calculating the Safety Distance (Minimum Distance)" on page 22). The individual method results in an optimized safety distance for each light curtain in the cascade, while ensuring that each sensor pair is located at an adequate distance from the hazard.

The response time depends on if the light curtain is host or one of the guests/remotes. The number of guest receivers affects the response time of all the guest receivers cascaded. To calculate the response time for each emitter/receiver pair in the cascade system use the following formulas:

Position #1 (host response times not affected):

$$\mathbf{Tr_{(host)} = Tr}$$

Guest Receiver in a two-receiver cascade system (1 guest):

$$\mathbf{Tr_{(guest)} = Tr + 15\ ms}$$

Guest Receiver in a three-receiver cascade system (2 guests):

$$\mathbf{Tr_{(guest)} = Tr + 20\ ms}$$

Guest Receiver in a four-receiver cascade system (3 guests):

$$\mathbf{Tr_{(guest)} = Tr + 25\ ms}$$

Tr is the response time of the receiver found in the model table (see "Models" on page 8).

9.5.4 Recovery Time (Off to On) for Cascaded Light Curtains

When a system goes from blocked to clear, the system performs a number of tests before turning on its outputs. This is the recovery time. The recover time is a critical factor in muting applications because it affects the placement of the mute sensors.

In a cascade system, the recovery time of the host is not affected by the fact it is being used in a cascade system. However, the recovery time of the master/host does affect the system recovery time even when it is a remote/guest that is going from blocked to cleared.

For unit recovery times see the model table in "Models" on page 8.

In a cascade system, the recovery time of a guest is affected by the number of units in the cascade system. If the synchronization beams (FID 1-3: the first beam; FID 4 and later: the first and last beam) are blocked, the recovery time of a guest is affected by its own recovery time and the recovery time of the host.

To determine the typical recovery time of a cascade system, use the following formulas:

© Banner Engineering Corp. All rights reserved.
www.bannerengineering.com

Synchronization Beam Blocked:

$$R_S = 0.38R_h + 2 \times (0.71R_g) + B$$

Non-Synchronization Beams (only) Blocked:

$$R_S = 0.38R_h + 0.71R_g + B$$

R_S is the system recovery time when a remote/guest goes from blocked to clear.

R_h is the standalone recovery time of the host, based on sensor length and resolution.

R_g is the standalone recovery time of the guest, based on sensor length and resolution.

B is the bus delay adder, dependent on the number of guests in the system:

1 guest (2 pair cascade system) B = 4.5 ms
2 guests (3 pair cascade system) B = 7.06 ms
3 guests (4 pair cascade system) B = 9.62 ms

Example

Host S4BR30-900-S

Guest S4BR30-1800-S

Synchronization Beam Blocked: $R_S = 0.38 \times 54 + 2 \times 0.71 \times 91 + 4.5 = 154$ ms
Non-Synchronization Beam Blocked: $R_S = 0.38 \times 54 + 0.71 \times 91 + 4.5 = 90$ ms

© Banner Engineering Corp. All rights reserved.
www.bannerengineering.com

Chapter 10 Checkout Procedures

This section lists the schedule of checkout procedures and describes where each procedure is documented. Checkouts must be performed as described. Results should be recorded and kept in the appropriate place (for example, near the machine, and/or in a technical file).

Banner Engineering highly recommends performing the System checkouts as described. However, a Qualified Person (or team) should evaluate these generic recommendations, considering their specific application, and determine the appropriate frequency of checkouts. This will generally be determined by a risk assessment, such as the one contained in ANSI B11.0. The result of the risk assessment will drive the frequency and content of the periodic checkout procedures and must be followed.

10.1 Schedule of Checkouts

Checkout cards, the Important Safety Information Label (p/n 188100), and this manual can be downloaded at www.bannerengineering.com.

Checkout Procedure	When to Perform	Where to Find the Procedure	Who Must Perform the Procedure
Trip Test	At Installation Any time the System, the guarded machine, or any part of the application is altered.	"Conduct a Trip Test" on page 46	Qualified Person
Commissioning Checkout	At Installation Whenever changes are made to the System (for example, either a new configuration of the S4B or changes to the guarded machine).	"Commissioning Checkout" on page 58	Qualified Person
Shift/Daily Checkout	At each shift change Machine setup change Whenever the System is powered up During continuous machine run periods, this checkout should be performed at intervals not to exceed 24 hours.	**Daily Checkout Card** (Banner p/n 230288) A copy of the checkout results should be recorded and kept in the appropriate place (for example, near or on the machine, in the machine's technical file).	Designated Person or Qualified Person
Semi-Annual Checkout	Every six months following System installation, or whenever changes are made to the System (either a new configuration of the S4B or changes to the machine).	**Semi-Annual Checkout Card** (Banner p/n 230289) A copy of the checkout results should be recorded and kept in the appropriate place (for example, near or on the machine, in the machine's technical file).	Qualified Person

© Banner Engineering Corp. All rights reserved.
www.bannerengineering.com

Chapter 11 Product Support and Maintenance

11.1 Supporting Files

The following documentation and files are available at www.bannerengineering.com.

Part number	Document Name/File Name
230288	S4B Safety Light Curtain Daily Checkout
230289	S4B Safety Light Curtain Semi-Annual Checkout
256017	S4B IO-Link Data Reference Guide
255907	S4B IODD File
B_51980033	S4B IO-Link AOI Files
B_51980034	S4B Siemens Functions
228876	IO-Link Configuration Software Instruction Manual

11.2 Cleaning

Clean components with mild detergent or window cleaner and a soft cloth.

Avoid cleaners containing alcohol, as they may damage the polycarbonate housing.

11.3 Contact Us

Banner Engineering Corp. | 9714 Tenth Avenue North | Plymouth, MN 55441, USA | Phone: + 1 888 373 6767

For worldwide locations and local representatives, visit www.bannerengineering.com.

11.4 Repairs and Translations

English

Contact Banner Engineering for troubleshooting of this device. **Do not attempt any repairs to this Banner device; it contains no field-replaceable parts or components.** If the device, device part, or device component is determined to be defective by a Banner Applications Engineer, they will advise you of Banner's RMA (Return Merchandise Authorization) procedure.

```
IMPORTANT: If instructed to return the device, pack it with care. Damage that occurs in return
shipping is not covered by warranty.
```

Obtain assistance with product repairs by contacting your local Banner Engineering Corp distributor or by calling Banner directly at (763) 544-3164. Access literature translated into your native language on the Banner website at www.bannerengineering.com or contact Banner directly at (763) 544-3164.

Deutsch

Wenden Sie sich zur Fehlerbehebung dieses Geräts an Banner Engineering. **Versuchen Sie nicht, Reparaturen an diesem Banner-Gerät vorzunehmen. Das Gerät enthält keine am Einsatzort auszuwechselnden Teile oder Komponenten.** Wenn ein Banner-Anwendungstechniker zu dem Schluss kommt, dass dieses Gerät, ein Teil oder eine Komponente davon defekt ist, erhalten Sie von dem Techniker Erläuterungen zu Banners RMA-Verfahren (Return Merchandise Authorization) für die Warenrückgabe.

```
WICHTIG: Wenn Sie der Techniker anweist, das Gerät zurückzusenden, verpacken Sie es bitte
sorgfältig. Transportschäden bei der Rücksendung werden von der Garantie nicht abgedeckt.
```

Unterstützung bei Produktreparaturen erhalten Sie von Ihrem örtlichen Banner Engineering Corp Händler oder direkt von Banner unter Tel. (763) 544-3164. Die in Ihre Muttersprache übersetzte Literatur finden Sie auf der Banner-Website unter www.bannerengineering.com oder kontaktieren Sie Banner direkt unter Tel. (763) 544-3164.

© Banner Engineering Corp. All rights reserved.
www.bannerengineering.com

Français

Pour plus d'informations sur le dépannage du produit, contactez Banner Engineering. **Ne tentez pas de réparer ce dispositif Banner. Il ne contient aucun composant ou pièce qui puisse être remplacé sur place.** Si un ingénieur de Banner conclut que le dispositif ou l'une de ses pièces ou composants est défectueux, il vous informera de la procédure à suivre pour le retour des produits (RMA).

Important : Si vous devez retourner le dispositif, emballez-le avec soin. Les dégâts occasionnés pendant le transport de retour ne sont pas couverts par la garantie.

Pour vous aider lors de la réparation de produits, contactez votre distributeur Banner local our appelez directement Banner au (763) 544-3164. La documentation traduite dans votre langue est disponible sur le site internet de Banner www.bannerengineering.com ou contactez directement Banner au (763) 544-3164.

Italiano

Per le procedure di individuazione e riparazione dei guasti di questo dispositivo, contattare Banner Engineering. **Non tentare di riparare questo dispositivo Banner, in quanto non contiene parti o componenti sostituibili dall'utente.** Se il dispositivo, una parte del dispositivo o un componente del dispositivo viene riscontrato difettoso da un tecnico Banner, il nostro personale vi comunicherà la procedura da seguire per ottenere l'autorizzazione al reso.

Importante: Se si ricevono istruzioni di rispedire il dispositivo al produttore, imballarlo con cura. I danni dovuti al trasporto non sono coperti dalla garanzia.

Per assistenza nelle riparazioni dei prodotti, contattare il distributore locale Banner Engineering Corp o contattare direttamente Banner al numero (763) 544-3164. È possibile accedere alla documentazione tradotta nella propria lingua madre sul sito Web Banner all'indirizzo www.bannerengineering.com o contattare direttamente Banner al numero (763) 544-3164.

Español

Comuníquese con Banner Engineering para solucionar de problemas de este dispositivo. **No intente ninguna reparación a este dispositivo de Banner, contiene piezas o componente que no se pueden cambiar en terreno.** Si algún ingeniero de aplicaciones de Banner determina que el dispositivo, alguna de las piezas o alguno de los componentes del dispositivo está defectuoso, le informará el procedimiento de autorización de devolución de mercancía (RMA, por sus siglas en inglés) de Banner.

Importante: Si se le solicita devolver el dispositivo, empáquelo con cuidado. Puede haber daños durante el envío de devolución que no estén cubiertos por la garantía.

Para reparaciones de productos, por favor contacte a su distribuidor local de Banner Engineering o llame a Banner directamente al 00 1 (763) 544-3164. Vea la literatura traducida en su idioma en el sitio web Banner en www.bannerengineering.com o comuníquese con Banner directamente al 00 1 (763) 544-3164.

中国人

如需对本装置进行故障排查，请联系邦纳。**请勿尝试自行维修该邦纳装置；本装置不包含任何可在现场更换的部件或组件。** 若经邦纳应用工程师确认设备、设备部件或组件存在缺陷，他们将告知您邦纳退货授权 (RMA) 流程。

重要注意事项： 如被要求退回装置，请妥善包装后寄回。退货运输过程中发生的损坏不在保修范围内。

请联系当地的 Banner Engineering Corp 经销商或直接致电 Banner +1 (763) 544-3164，以获得产品维修帮助。请访问邦纳网站 www.bannerengineering.com 或直接拨打 +1 (763) 544-3164 联系邦纳，获取翻译成您母语的资料。

한국인

이 장치의 문제를 해결하려면 Banner Engineering에 문의하십시오. **이 Banner 장치에는 현장에서 교체할 수 있는 부품 또는 구성품이 없으므로 수리를 시도하지 마십시오.** Banner 애플리케이션 엔지니어가 장치, 장치 부품 또는 장치 구성품에 결함이 있는 것으로 판정하면, Banner의 RMA(제품 반송 승인)절차에 대해 안내해 드립니다.

중요: 제품을 반송하도록 안내 받으셨다면 잘 포장해주십시오. 반송 도중에 발생한 손상은 보증 서비스가 적용되지 않습니다.

제품 수리에 대한 지원은 지역 Banner Engineering Corp 대리점에 문의하거나 Banner에 직접 (763) 544-3164로 문의하실 수 있습니다. 사용자의 모국어로 번역된 자료는 Banner 웹사이트 www.bannerengineering.com에서 액세스하거나 Banner에 직접 (763) 544-3164로 문의하실 수 있습니다.

© Banner Engineering Corp. All rights reserved.
www.bannerengineering.com

日本語

この装置のトラブルシューティングについては、バナーエンジニアリングにお問い合わせください。**このバナー装置には、現場では交換できない部品またはコンポーネントが含まれているため、修理を試みてはいけません。** バナーのアプリケーションエンジニアが装置、装置の部品、または装置のコンポーネントに欠陥があると判断した場合、バナーのRMA（返品承認）手続きについてお知らせします。

重要 ： 返品を指示された場合は、装置を丁寧に梱包してください。返品時に発生した破損は保証の対象外となります。

製品の修理については、最寄りのBanner Engineering Corp代理店にお問い合わせいただくか、米国+1 (763) 544-3164まで直接お電話でお問い合わせください。バナーのウェブサイト（www.bannerengineering.com）でお客様の言語に翻訳された資料にアクセスするか、米国+1 (763) 544-3164まで直接お電話でお問い合わせください。

čeština

Pro řešení problémů se zařízením kontaktujte společnost Banner Engineering. **Neprovádějte žádné opravy zařízení Banner. Neobsahují žádné komponenty nebo části, které by byly vyměnitelné.** Pokud je zařízení, jeho část nebo díl označen technikem společnosti Banner jako poškozený, bude Vám doporučeno vyplnit reklamační RMA protokol.

Důležité: Pokud byl vydán požadavek na vrácení zařízení, pečlivě ho zabalte. Poškození vzniklé při dopravě není považováno za záruční opravu.

Pokud produkt potřebuje opravu, vyžádejte si pomoc od místního distributora společnosti Banner Engineering Corp nebo přímo na telefonním čísle (763) 544-3164. Dokumentaci přeloženou do vašeho jazyka si vyhledejte na webových stránkách společnosti Banner na adrese www.bannerengineering.com nebo se obraťte přímo na společnost Banner na telefonním čísle (763) 544-3164.

Polski

W celu rozwiązania problemów z urządzeniem należy skontaktować się z działem technicznym firmy Banner Engineering. **Pod żadnym pozorem nie próbuj naprawiać tego urządzenia firmy Banner; nie zawiera ono części ani elementów, które można wymieniać samodzielnie.** Jeśli urządzenie, jego część lub element zostaną uznane za wadliwe przez inżyniera technicznego Banner, poinformuje on użytkownika o firmowej procedurze zwrotu towaru (RMA) firmy Banner.

Ważne: Jeśli urządzenie ma zostać zwrócone, należy je starannie zapakować. Uszkodzenia powstałe podczas odsyłki nie są objęte gwarancją.

Aby uzyskać pomoc w zakresie naprawy produktu, należy skontaktować się z lokalnym dystrybutorem Banner Engineering Corp lub zadzwonić bezpośrednio do firmy Banner pod numer (763) 544-3164. Dostęp do literatury przetłumaczonej na swój język ojczysty można uzyskać na stronie internetowej firmy Banner pod adresem www.bannerengineering.com lub kontaktując się bezpośrednio z firmą Banner pod numerem (763) 544-3164.

Português

Entre em contato com a Engenharia da Banner para a solução de problemas deste dispositivo. **Não tente fazer nenhum reparo neste dispositivo Banner; ele não contém peças ou componentes substituíveis em campo.** Se um técnico de aplicações da Banner determinar que o dispositivo, peça ou componente do dispositivo está com defeito, ele o informará sobre o procedimento de RMA (Autorização de Devolução de Mercadoria) da Banner.

Importante: Se for instruído a devolver o dispositivo, embale-o com cuidado. Os danos ocorridos no transporte de devolução não são cobertos pela garantia.

Obtenha assistência para reparos do produto entrando em contato com o distribuidor local da Banner Engineering Corp ou ligando diretamente para a Banner no telefone (763) 544-3164. Acesse a literatura traduzida para seu idioma nativo no site da Banner em www.bannerengineering.com ou entre em contato diretamente com a Banner pelo telefone (763) 544-3164.

Türkçe

Bu cihazda sorun giderme işlemleri için Banner Engineering ile iletişime geçin. **Bu Banner cihazını onarmaya çalışmayın; cihaz sahada değiştirilebilir parça veya bileşen içermez.** Bir Banner Uygulama Mühendisi tarafından cihazın, cihazın bir parçasının veya bir cihaz bileşeninin kusurlu olduğu tespit edilirse, Banner RMA (İade Mal Yetkilendirme) prosedürü hakkında bilgilendirilirsiniz.

ÖNEMLİ: İade etmeniz istenirse, cihazı dikkatli bir şekilde paketleyin. İade nakliyesinde meydana gelecek hasarlar garanti kapsamında değildir.

Yerel Banner Engineering Corp distribütörünüzle iletişime geçerek veya doğrudan (763) 544-3164 numaralı telefondan Banner'ı arayarak ürün onarımlarıyla ilgili yardım alın. Ana dilinize çevrilmiş dokümanlara www.bannerengineering.com adresindeki Banner web sitesinden erişebilir veya (763) 544-3164 numaralı telefondan doğrudan Banner ile iletişime geçebilirsiniz.

© Banner Engineering Corp. All rights reserved.
www.bannerengineering.com

11.5 Manufacturing Date

Every S4B produced is marked with a code that defines the week and year of manufacture and manufacturing location. The code format (U.S. Standard format) is: **YYWWL**

- YY = Year of manufacture, 2 digits
- WW = Week of manufacture, 2 digits
- L = Banner-specific code, 1 digit

Example: 2309H = 2023, Week 9.

11.6 Disposal

Devices that are no longer in use should be disposed of according to the applicable national and local regulations.

11.7 Banner Engineering Corp Limited Warranty

Banner Engineering Corp. warrants its products to be free from defects in material and workmanship for one year following the date of shipment. Banner Engineering Corp. will repair or replace, free of charge, any product of its manufacture which, at the time it is returned to the factory, is found to have been defective during the warranty period. This warranty does not cover damage or liability for misuse, abuse, or the improper application or installation of the Banner product.

THIS LIMITED WARRANTY IS EXCLUSIVE AND IN LIEU OF ALL OTHER WARRANTIES WHETHER EXPRESS OR IMPLIED (INCLUDING, WITHOUT LIMITATION, ANY WARRANTY OF MERCHANTABILITY OR FITNESS FOR A PARTICULAR PURPOSE), AND WHETHER ARISING UNDER COURSE OF PERFORMANCE, COURSE OF DEALING OR TRADE USAGE.

This Warranty is exclusive and limited to repair or, at the discretion of Banner Engineering Corp., replacement. **IN NO EVENT SHALL BANNER ENGINEERING CORP. BE LIABLE TO BUYER OR ANY OTHER PERSON OR ENTITY FOR ANY EXTRA COSTS, EXPENSES, LOSSES, LOSS OF PROFITS, OR ANY INCIDENTAL, CONSEQUENTIAL OR SPECIAL DAMAGES RESULTING FROM ANY PRODUCT DEFECT OR FROM THE USE OR INABILITY TO USE THE PRODUCT, WHETHER ARISING IN CONTRACT OR WARRANTY, STATUTE, TORT, STRICT LIABILITY, NEGLIGENCE, OR OTHERWISE.**

Banner Engineering Corp. reserves the right to change, modify or improve the design of the product without assuming any obligations or liabilities relating to any product previously manufactured by Banner Engineering Corp. Any misuse, abuse, or improper application or installation of this product or use of the product for personal protection applications when the product is identified as not intended for such purposes will void the product warranty. Any modifications to this product without prior express approval by Banner Engineering Corp will void the product warranties. All specifications published in this document are subject to change; Banner reserves the right to modify product specifications or update documentation at any time. Specifications and product information in English supersede that which is provided in any other language. For the most recent version of any documentation, refer to: www.bannerengineering.com.

For patent information, see www.bannerengineering.com/patents.

© Banner Engineering Corp. All rights reserved.

Chapter 12 Accessories

12.1 Safety Controllers

Safety Controllers provide a fully configurable, software-based safety logic solution for monitoring safety and non-safety devices.

For additional models and XS26 expansion modules, see instruction manual p/n 174868.

Table 27. Safety controller models

Non-Expandable Models	Expandable Models	Description
SC26-2	**XS26-2**	26 convertible I/O and 2 redundant solid-state safety outputs
SC26-2d	**XS26-2d**	26 convertible I/O and 2 redundant solid-state safety outputs with display
SC26-2e	**XS26-2e**	26 convertible I/O and 2 redundant solid-state safety outputs with Ethernet
SC26-2de	**XS26-2de**	26 convertible I/O and 2 redundant solid-state safety outputs with display and Ethernet
SC10-2roe		10 inputs, 2 redundant relay safety outputs (3 contacts each) (ISD and Ethernet compatible)
	XS26-ISDd	26 inputs, 2 redundant solid-state safety outputs with display, Ethernet, and 8 ISD channels

12.2 Interface Modules

Interface modules provide forced-guided, mechanically-linked relay (safety) outputs for the S4B System with an 8-pin interconnect (with EDM function). The interface module is required to be monitored by the EDM function and should not be used with S4B System with a 5-pin RD (removable disconnect) cordset. See the referenced Banner datasheets for more information.

Model	Description	Datasheet
IM-T-9A	Interface module, 3 normally open (N.O.) redundant-output 6 amp contacts, removable screw terminals	62822
IM-T-11A	Interface module, 2 normally open (N.O.) redundant-output 6 amp contacts, plus 1 normally closed (N.C.) auxiliary contact, removable screw terminals	
SR-IM-9A	Interface module, 3 normally open (N.O.) redundant-output 6 amp contacts, spring clamp terminals	208873
SR-IM-11A	Interface module, 2 normally open (N.O.) redundant-output 6 amp contacts, plus 1 normally closed (N.C.) auxiliary contact, spring clamp terminals	

12.3 Contactors

If used, two contactors are required per S4B System that is monitored by the EDM circuit and should not be used with the S4B system with a 5-pin RD (removable disconnect) cordset. See Banner datasheet p/n 111881 for more information.

Model	Description
11-BG00-31-D-024	10 amp positive-guided contactor, 3 normally open (N.O.) and 1 normally closed (N.C.)
BF1801L024	18 amp positive-guided contactor, 3 normally open (N.O.) and 1 normally closed (N.C.) (N.C. contact rated at 10 amps)

12.4 In-Line Sensor Status Indicator

The S15LRGPQ provides in-line sensor status indication of the output status of the 5-pin host or stand alone S4B receiver.

See datasheet p/n 212217 for more information.

© Banner Engineering Corp. All rights reserved.
www.bannerengineering.com

	• Connects in line with receiver cable • Translucent white PUR body • Fully encapsulated IP66, IP67, and IP68 body

12.5 Brackets

The S4BA-MBK-11 End Mount Brackets can be used only with FID3 or older S4B sensors.

S4BA-MBK-11 • End mount bracket • ±15° rotation • Glass-filled polycarbonate adapter • 8-Gauge cold-rolled steel, black zinc finish L-bracket • Includes two brackets • CAD Files: DXF, PDF, IGS, STP	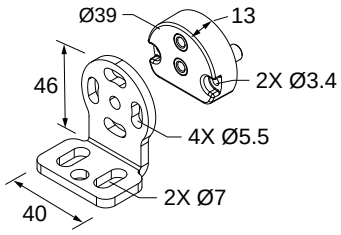

The S4BA-MBK-12 End Mount Brackets can be used only with FID4 or later S4B sensors.

S4BA-MBK-12 • End mount bracket • 8-gauge steel, black zinc plated • ±15° rotation • Includes two brackets and mounting hardware • CAD Files: DXF, PDF, IGS, STP	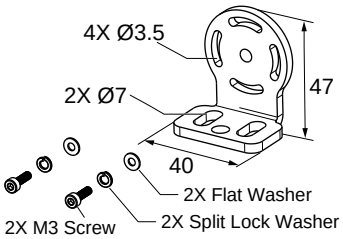

S4BA-MBK-16 • Side mount bracket • ±15° rotation • Glass-filled polycarbonate • Includes two brackets • CAD Files: DXF, PDF, IGS, STP	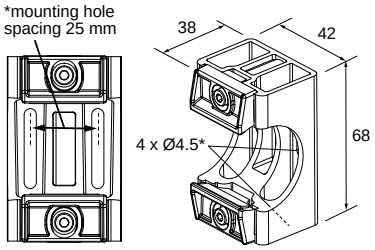

12.6 RD Cordsets—FID 1 Models

A RD (removable disconnect) cordset is required to connect directly to the sensor housing. The quick disconnect connector can then be used for cable-to-cable interconnections and connection to other devices.

FID 1 S4B units (units with no FID # printed on them) use the following DES4E-51D double-ended cordset.

IMPORTANT: This cordset is **not** compatible with FID 2 units.

© Banner Engineering Corp. All rights reserved.
www.bannerengineering.com

Table 28. 5-Pin Threaded M12 Cordset—Double-Ended

Model	Length	Style	Dimensions	Pinout (Male)
DES4E-51D	0.3 m (1 ft)	Male Straight	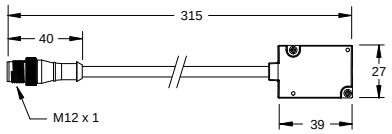	 1 = Brown 2 = White 3 = Blue 4 = Black 5 = Gray

12.7 RD Cordsets—FID 2 or Later Models

A RD (removable disconnect) cordset is required to connect directly to the sensor housing. The quick disconnect connector can then be used for cable-to-cable interconnections and connection to other devices.

The RD cordset branches are needed to cascade S4B sensors.

FID 2 or later S4B units (see "S4B Light Curtains with Different FIDs" on page 9) require the use of one of the RD cordsets from the following table.

IMPORTANT: These cordsets are **not** compatible with FID 1 units.

Table 29. 5-Pin and 8-Pin Threaded M12 Cordsets—Double-Ended

Model	Length (L)	Style	Use	Dimensions	Pinout
DES4-M51-D	0.4 m (1.31 ft)	Male Straight	5-pin, male, black, stand-alone RD cordset	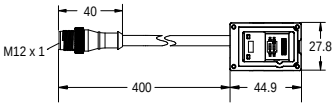	**Male** 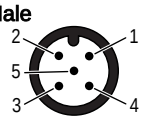 1 = Brown 2 = White 3 = Blue 4 = Black 5 = Gray
DES4-M81-D	0.4 m (1.31 ft)	Male Straight	8-pin, male, black, stand-alone RD cordset	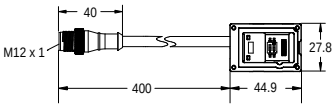	**Female**  1 = White 2 = Brown 3 = Green 4 = Yellow 5 = Gray 6 = Pink 7 = Blue 8 = Red
DES4-M51-F51-D	Male branch 400 mm; Female Branch 350 mm	Male Straight/ Female Straight	5-pin, male, black RD cordset and 5-pin, female, yellow RD cordset, first (host) unit in cascade chain	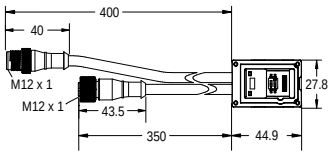	**Male**  **Female** 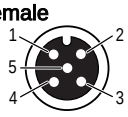

Continued on page 94

© Banner Engineering Corp. All rights reserved.
www.bannerengineering.com

Continued from page 93

Model	Length (L)	Style	Use	Dimensions	Pinout
DES4-M81-F51-D	Male branch 400 mm; Female Branch 350 mm	Male Straight/ Female Straight	8-pin, male, black RD cordset and 5-pin, female, yellow RD cordset, first (host) unit in cascade chain	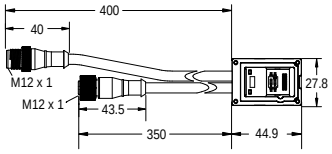	Male  Female 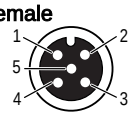
DES4-M51-F51-D-REM	Male branch 400 mm; Female Branch 350mm	Male Straight/ Female Straight	5-pin, female, yellow RD cordset and 5-pin, male, yellow RD cordset for middle units in cascade chain	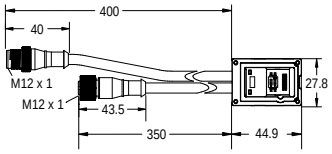	Male  Female 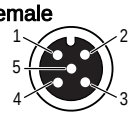
DES4-M51-RTP	0.4 m (1.31 ft)	Male Straight	5-pin, male, yellow RD cordset for last unit in cascade chain	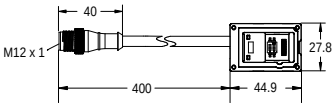	Male 

Table 30. Cascade System Cordset Kits

Model	Length	Use	Includes	Quantity
S4BA-Cascade-2	0.4 m (1.31 ft)	Two sensor cascade system with 5-pin male M12 host	DES4-M51-F51-D	2
			DES4-M51-RTP	2
S4BA-Cascade-3	0.4 m (1.31 ft)	Three sensor cascade system with 5-pin male M12 host	DES4-M51-F51-D	2
			DES4-M51-F51-D-REM	2
			DES4-M51-RTP	2
S4BA-Cascade-4	0.4 m (1.31 ft)	Four sensor cascade system with 5-pin male M12 host	DES4-M51-F51-D	2
			DES4-M51-F51-D-REM	4
			DES4-M51-RTP	2
S4BA-Cascade-2-M12M8	0.4 m (1.31 ft)	Two sensor cascade system with 8-pin male M12 host	DES4-M81-F51-D	2
			DES4-M51-RTP	2
S4BA-Cascade-3-M12M8	0.4 m (1.31 ft)	Three sensor cascade system with 8-pin male M12 host	DES4-M81-F51-D	2
			DES4-M51-F51-D-REM	2
			DES4-M51-RTP	2
S4BA-Cascade-4-M12M8	0.4 m (1.31 ft)	Four sensor cascade system with 8-pin male M12 host	DES4-M81-F51-D	2
			DES4-M51-F51-D-REM	4
			DES4-M51-RTP	2

12.8 Cordsets

Machine interface cordsets provide power to the first emitter/receiver pair.

These cordsets have a M12 quick-disconnect connector on one end and are unterminated (cut to length) on the other end to interface with guarded machine. PVC cable jacket and PUR overmolded strain relief.

© Banner Engineering Corp. All rights reserved.
www.bannerengineering.com

Table 31. BC-M12F5-22-x 5-pin M12 Quick disconnect to flying lead cordsets

5-Pin A-Code Single-Ended M12 Female Cordsets (datasheet p/n 235936)				
Model	**Length**	**Dimensions (mm)**	**Pinout (Female)**	
BC-M12F5-22-1	1 m (3.28 ft)	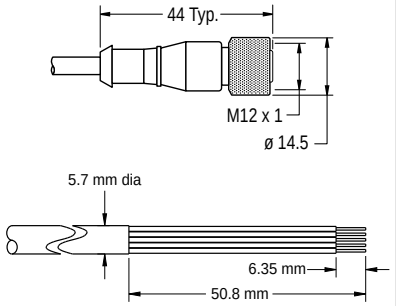	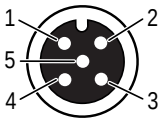	1 = Brown 2 = White 3 = Blue 4 = Black 5 = Gray c UL us LISTED
BC-M12F5-22-2	2 m (6.56 ft)			
BC-M12F5-22-5	5 m (16.4 ft)			
BC-M12F5-22-8	8 m (26.25 ft)			
BC-M12F5-22-10	10 m (30.81 ft)			
BC-M12F5-22-15	15 m (49.2 ft)			

Splitter cordsets are used for easy interconnection between an S4B receiver and its emitter, providing a single “homerun” cable. Model BC-M12F5-M12M5-22-x double-ended cordsets may be used to extend the QD trunk or either branch. (Branch #1 and branch #2 cable sections are 300 mm/1 ft long.)

Model BC-M12F5-22-x single-ended corsets may be used to extend the quick disconnect trunk for cut-to-length applications.

The 5-pin splitter cordsets allow for an easy interconnection between the receiver and emitter, and provide a single trunk cable for the optional interchangeable ("swapable") connection.

5-Pin Double-Ended M12 Female to M12 Male Splitter Flat Junction Cordsets				
Model	**Trunk (Male)**	**Branches (Female)**	**Pinout (Male)**	**Pinout (Female)**
CSB-M1251M1251	0.3 m (0.98 ft)	2 x 0.3 m (0.98 ft)		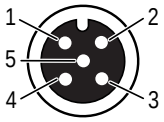
CSB-M1258M1251	2.44 m (8 ft)			
CSB-M12515M1251	4.57 m (15 ft)			
CSB-M12525M1251	7.62 m (25 ft)			
CSB-UNT525M1251	7.62 m (25 ft) Unterminated			
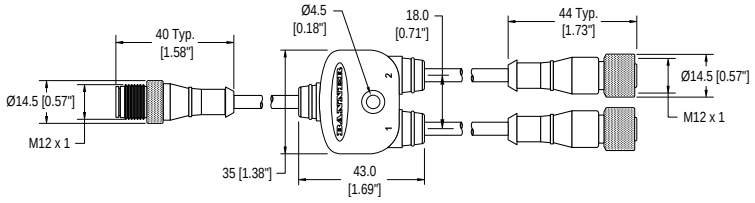			1 = Brown 2 = White 3 = Blue	4 = Black 5 = Green/Yellow

Low-cost double-ended 5-pin cabling option:

5-Pin A-Code Double-Ended M12 Female to M12 Male Cordsets (datasheet p/n 236183)				
Model	**Length**	**Dimensions (mm)**	**Pinouts**	
BC-M12F5-M12M5-22-1	1 m (3.28 ft)	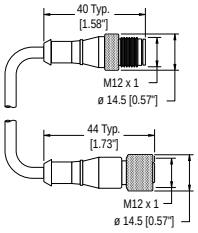	Female 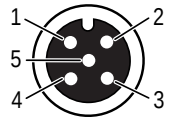 Male 	1 = Brown 2 = White 3 = Blue 4 = Black 5 = Gray
BC-M12F5-M12M5-22-2	2 m (6.56 ft)			
BC-M12F5-M12M5-22-5	5 m (16.4 ft)			
BC-M12F5-M12M5-22-8	8 m (26.25 ft)			
BC-M12F5-M12M5-22-10	10 m (30.81 ft)			
BC-M12F5-M12M5-22-15	15 m (49.2 ft)			

Yellow double-ended 5-pin cable option:

© Banner Engineering Corp. All rights reserved.
www.bannerengineering.com

5-Pin Double-Ended M12 Female to M12 Male Cordsets					
Model	**Length**	**Style**	**Dimensions**	**Pinout (Male)**	**Pinout (Female)**
DEE2R-51D	0.3 m (1 ft)	Female Straight/ Male Straight	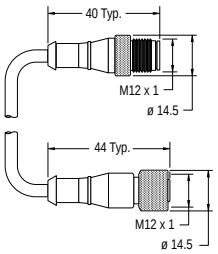		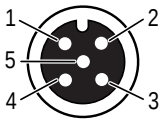
DEE2R-53D	0.91 m (3 ft)				
DEE2R-58D	2.44 m (8 ft)				
DEE2R-515D	4.57 m (15 ft)				
DEE2R-525D	7.62 m (25 ft)				
DEE2R-550D	15.2 m (50 ft)				
DEE2R-575D	22.9 m (75 ft)				
DEE2R-5100D	30.5 m (100 ft)			1 = Brown 2 = White 3 = Blue	4 = Black 5 = Green/Yellow

8-Pin A-Code Single-Ended M12 Female Cordsets (datasheet p/n 235941)				
Model	**Length**	**Dimensions (mm)**	**Pinout (Female)**	
BC-M12F8-24-1	1 m (3.28 ft)	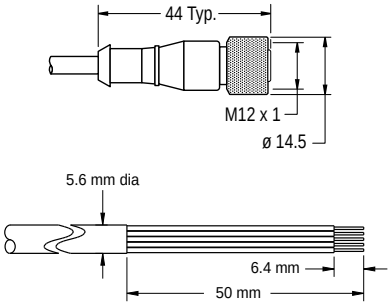	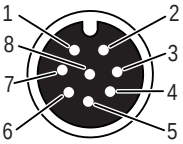	1 = White 2 = Brown 3 = Green 4 = Yellow 5 = Gray 6 = Pink 7 = Blue 8 = Red
BC-M12F8-24-2	2 m (6.56 ft)			
BC-M12F8-24-5	5 m (16.4 ft)			
BC-M12F8-24-10	10 m (30.81 ft)			

8-Pin A-Code Double-Ended M12 Female to M12 Male Cordsets (datasheet p/n 235955)				
Model	**Length**	**Dimensions (mm)**	**Pinouts (Female)**	**Pinouts (Male)**
BC-M12F8-M12M8-24-1	1 m (3.28 ft)	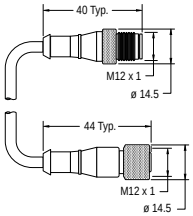	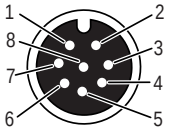	
BC-M12F8-M12M8-24-2	2 m (6.56 ft)			
BC-M12F8-M12M8-24-5	5 m (16.4 ft)			
BC-M12F8-M12M8-24-8	8 m (26.25 ft)		1 = White 2 = Brown 3 = Green 4 = Yellow	5 = Gray 6 = Pink 7 = Blue 8 = Red
BC-M12F8-M12M8-24-10	10 m (30.81 ft)			
BC-M12F8-M12M8-24-15	15 m (49.2 ft)			

© Banner Engineering Corp. All rights reserved.
www.bannerengineering.com

8-Pin M12 Female Branch to Male Trunk Flat Junction Splitter Cordsets			
Model	**Trunk (Male)**	**Branches (Female)**	**Pinout**
CSB-M1280M1280	No trunk	No branches	Male 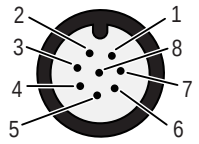
CSB-M1281M1281	0.3 m (1 ft)	2 x 0.3 m (1 ft)	
CSB-M1288M1281	2.44 m (8 ft)		
CSB-M12815M1281	4.57 m (15 ft)		
CSB-M12825M1281	7.62 m (25 ft)		
CSB-UNT825M1281	7.62 m (25 ft) Unterminated		
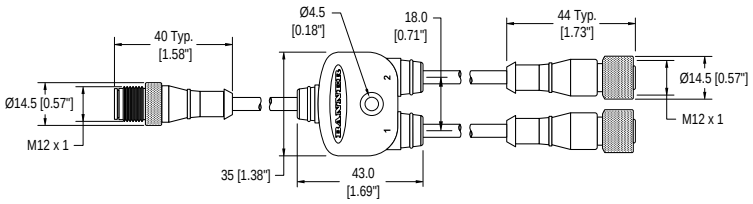			Female 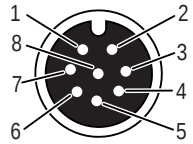 1 = Brown 2 = Or/Bk 3 = Orange 4 = White 5 = Black 6 = Blue 7 = Gn/Ye 8 = Violet

12.9 IO-Link Adapters

5-Pin IO-Link Molded Junction Block				
Model	**Trunk (Male)**	**Branches (Female)**	**Pinout**	**Wiring**
R50-2M125-2M125-S4B	None	None	Female 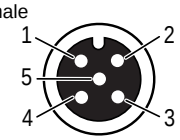 Male 	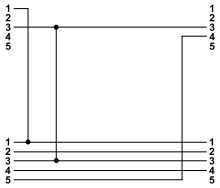
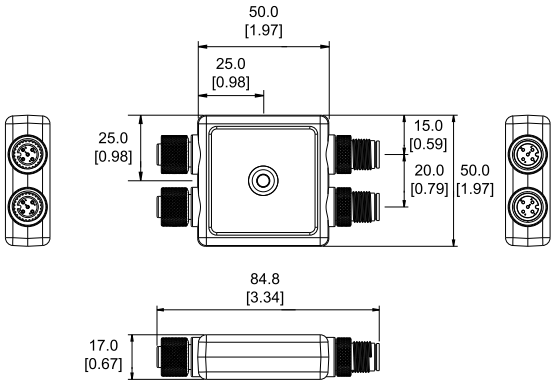				

© Banner Engineering Corp. All rights reserved.
www.bannerengineering.com

8-Pin M12 Female to 4-Pin M12 Male and 8-Pin M12 Male IO-Link Splitter Cable				
Model	**Trunk (Male)**	**Branches (Female)**	**Pinout**	**Wiring**
BY-M12F8-0.3-M12M4-M12M8-0.3-S4B-IOL3	0.3 m (.98 ft)	0.3 m (.98 ft)	Female 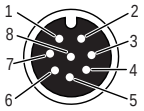 Male 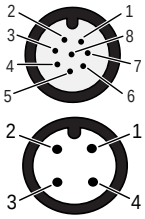	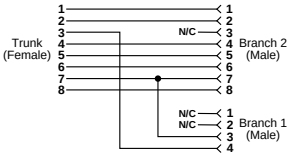
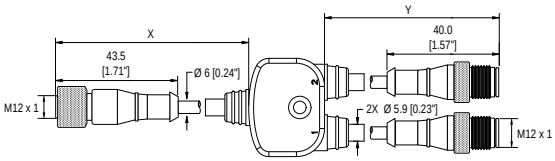				

12.10 Test Piece

Use a test piece during a trip test to verify the detection capability of the sensor.

Model	Description
STP-13	14 mm test piece (14 mm resolution systems)
STP-14	30 mm test piece (30 mm resolution systems)
STP-15	60 mm test piece (30 mm resolution systems with reduced resolution)
STP-21	24 mm test piece (14 mm resolution systems with reduced resolution)

12.11 Universal (Input) Safety Modules

UM-FA-xA Safety Modules are safety monitoring devices that provide forced-guided, mechanically-linked relay (safety) outputs for the S4B system.

See datasheet p/n 141249 for more information.

Model	Description
UM-FA-9A	3 normally open (N.O.) redundant-output 6 amp contacts
UM-FA-11A	2 normally open (N.O.) redundant-output 6 amp contacts, plus 1 normally closed (N.C.) auxiliary contact

12.12 Alignment Aids

Model	Description	
LAT-1-S4B	Self-contained visible-beam laser tool for aligning any S4B emitter/receiver pair. Includes retroreflective target material and mounting clip.	
S4BA-LAT-2	Clip-on retroreflective LAT target	
S4BA-LAT-SS	Replacement LAT-1 clip	
BRT-THG-2-100	2-inch retroreflective tape, 100 ft	
BT-1	Beam tracker	

© Banner Engineering Corp. All rights reserved.
www.bannerengineering.com

12.13 SSM Series Corner Mirrors

- Robust for heavy-duty applications.
- Extra wide for use with long-range optical safety systems.
- Rear-surface glass mirrors are rated at 85% efficiency. The total sensing range decreases by approximately 8% per mirror. See mirror datasheet p/n 61934 or www.bannerengineering.com for further information.
- To order the stainless steel reflective surface models, add the suffix **-S** (for example, **SSM-375-S**); range reduction for these models is approximately 30% per mirror. See datasheet p/n 67200.
- Robust construction, two mounting brackets and hardware included.
- In addition to the included SMA-MBK-1 brackets, an EZA-MBK-2 adapter bracket kit is required for use with MSA Series stands; refer to the mounting bracket accessories list.
- Brackets may be inverted from the positions shown, decreasing dimension L1 by 58 mm (2.3 in).

Mirror Model	Reflective Area Length (Y)	Mounting Height (L1)[21]	Overall Height (L2)	Max. Light Screen Defined Area Height
SSM-100	100 mm (3.9 in)	211 mm (8.3 in)	178 mm (7.0 in)	50 mm (1.9 in)
SSM-200	200 mm (7.9 in)	311 mm (12.2 in)	278 mm (10.9 in)	150 mm (5.9 in)
SSM-375	375 mm (14.8 in)	486 mm (19.1 in)	453 mm (17.8 in)	325 mm (12.8 in)
SSM-475	475 mm (18.7 in)	586 mm (23.1 in)	553 mm (21.8 in)	425 mm (16.7 in)
SSM-550	550 mm (21.7 in)	661 mm (26.0 in)	628 mm (24.7 in)	500 mm (19.7 in)
SSM-675	675 mm (26.6 in)	786 mm (31.0 in)	753 mm (29.6 in)	625 mm (24.6 in)
SSM-825	825 mm (32.5 in)	936 mm (36.9 in)	903 mm (35.6 in)	775 mm (30.5 in)
SSM-875	875 mm (34.4 in)	986 mm (38.8 in)	953 mm (37.5 in)	825 mm (32.5 in)
SSM-975	975 mm (38.4 in)	1086 mm (42.8 in)	1053 mm (41.5 in)	925 mm (36.4 in)
SSM-1100	1100 mm (43.3 in)	1211 mm (47.7 in)	1178 mm (46.4 in)	1050 mm (41.3 in)
SSM-1175	1175 mm (46.3 in)	1286 mm (50.6 in)	1253 mm (49.3 in)	1125 mm (44.3 in)
SSM-1275	1275 mm (50.2 in)	1386 mm (54.6 in)	1353 mm (53.3 in)	1225 mm (48.2 in)
SSM-1400	1400 mm (55.1 in)	1511 mm (59.5 in)	1478 mm (58.2 in)	1350 mm (53.1 in)
SSM-1475	1475 mm (58.1 in)	1586 mm (62.5 in)	1553 mm (61.1 in)	1425 mm (56.1 in)
SSM-1550	1550 mm (61.0 in)	1661 mm (65.4 in)	1628 mm (64.1 in)	1500 mm (59.1 in)
SSM-1675	1675 mm (65.9 in)	1786 mm (70.3 in)	1753 mm (69.0 in)	1625 mm (63.9 in)
SSM-1750	1750 mm (68.9 in)	1861 mm (73.3 in)	1828 mm (72.0 in)	1700 mm (66.9 in)
SSM-1900	1900 mm (74.8 in)	2011 mm (79.2 in)	1978 mm (77.9 in)	1850 mm (72.8 in)

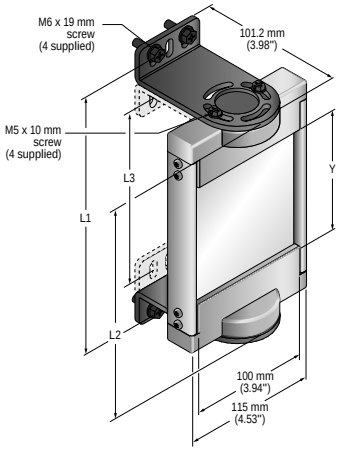

SSM Models	Light Curtain Series					
	SLS	S4B	LP	LS	Type 2	SGS
SSM-100						
SSM-200	150				150	
SSM-375	300	300	270	280	300	
SSM-475			410	350/420		
SSM-550	450	450		490	450	2–500
SSM-675	600	600	550	560/630	600	
SSM-825	750	750	690	700/770	750	
SSM-875			830	840		3–400
SSM-975	900	900		910	900	4–300
SSM-1100	1050	1050	970	980/1050	1050	
SSM-1175			1110	1120		

Continued on page 100

[21] The mounting brackets may be inverted from the positions shown at left (flanges pointing “inward” instead of “outward,” as shown). When this is done, dimension L1 decreases by 58 mm (2.3 inches).

© Banner Engineering Corp. All rights reserved.
www.bannerengineering.com

Continued from page 99

SSM Models	Light Curtain Series					
	SLS	S4B	LP	LS	Type 2	SGS
SSM-1275	1200	1200		1190	1200	4–400
SSM-1400	1350	1350	1250	1260/1330	1350	
SSM-1475			1390	1400		
SSM-1550	1500	1500		1470	1500	
SSM-1675			1530	1540/1610		
SSM-1750	1650	1650	1670	1680		
SSM-1900	1800	1800	1810	1750/1820		

12.14 MSA Series Stands

- Provides mounting T-slots with 20 mm dimension between slots
- Base included. Available without a base by adding the suffix **NB** to the model number (for example, **MSA-S42-1NB**)

Stand Model	Pole Height	Useable Stand Height	Overall Stand Height	
MSA-S24-1	610 mm (24 in)	483 mm (19 in)	616 mm (24.25 in)	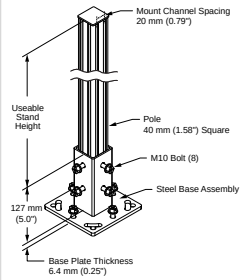
MSA-S42-1	1065 mm (42 in)	938 mm (37 in)	1071 mm (42.2 in)	
MSA-S66-1	1676 mm (66 in)	1549 mm (61 in)	1682 mm (66.25 in)	
MSA-S84-1	2134 mm (84 in)	2007 mm (79 in)	2140 mm (84.25 in)	
MSA-S105-1	2667 mm (105 in)	2540 mm (100 in)	2673 mm (105.25 in)	

12.15 Muting Accessories

Use the S4BA mute arms with the S4B and a muting device (such as the Banner Safety Controllers).

Table 32. Muting Accessories

Model	Description
S4BA-ML-LPQ20	L-configuration mute arm kit One mute sensor arm (2 sensors) and one retroreflector arm (2 reflectors)
S4BA-MX-LPQ20	X-configuration mute arm kit One mute sensor arm (2 sensors) and one retroreflector arm (2 reflectors)
S4BA-MT-LPQ20	T-configuration mute arm kit One mute sensor arm (4 sensors) and one retroreflector arm (4 reflectors)
R95-6M125-M128-S4BM	Splitter box for combining 5-pin emitter, 5-pin receiver, and up to 4 mute sensors to an 8-pin M12 110 mm cable
S4BA-Q20-2VPLP-Q5	Q20 retroreflective mute sensor with 600 mm (23.6 in) cordset and M12 quick disconnect
BRT-2X2	Retroreflective target for use with mute sensor

12.16 Remote Fixed Blanking Accessories

Table 33. Remote Fixed Blanking Accessories

Model	Description
S4BA-RFB	Remote Blanking Configurator; allows the configuration of fixed blanked areas and enabling/disabling of vibration tolerance
S4BA-RTP-1	Remote terminating resistor

Continued on page 101

© Banner Engineering Corp. All rights reserved.
www.bannerengineering.com

Continued from page 100

Model	Description
S4BA-RFB-K	Replacement key for S4BA-RFB

12.17 Adaptor Cables

Use these cables when replacing an older EZ-SCREEN light curtain with an S4B light curtain when External Device Monitoring (EDM) is not being used.

8-Pin Double-Ended M12 Female to M12 Male Emitter Cordset				
Model	**Length**	**Dimensions (mm)**	**Pinouts (Female)**	**Pinouts (Male)**
BC-M12F8-M12M8-24-0.3-EZS4BE	0.3 m (1 ft)	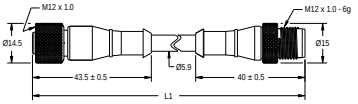	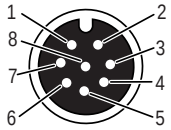 1 = no connection 2 = Brown 3 = no connection 4 = no connection 5 = no connection 6 = no connection 7 = Blue 8 = no connection	 1 = Brown 2 = no connection 3 = no connection 4 = no connection 5 = no connection 6 = Blue 7 = no connection 8 = no connection

Figure 49. Emitter Wiring Diagram

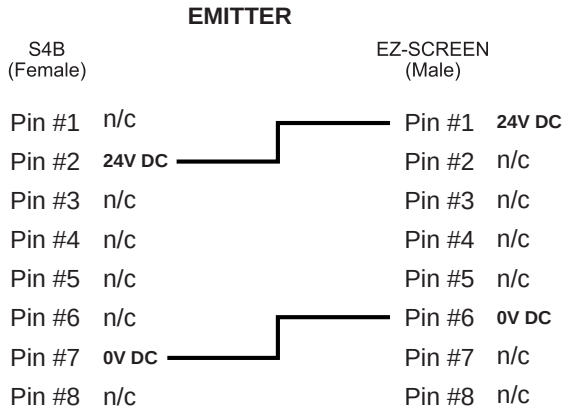

8-Pin Double-Ended M12 Female to M12 Male Receiver Cordset				
Model	**Length**	**Dimensions (mm)**	**Pinouts (Female)**	**Pinouts (Male)**
BC-M12F8-M12M8-24-0.3-EZS4BR	0.3 m (1 ft)	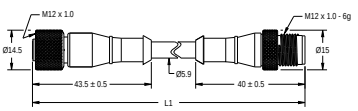	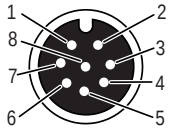 1 = Yellow 2 = White, jumper to Pin 4 3 = no connection 4 = Jumper to Pin 2 5 = Gray 6 = no connection 7 = Pink 8 = no connection	 1 = White 2 = no connection 3 = no connection 4 = Yellow 5 = Gray 6 = Pink 7 = no connection 8 = no connection

© Banner Engineering Corp. All rights reserved.
www.bannerengineering.com

Figure 50. Receiver Wiring Diagram

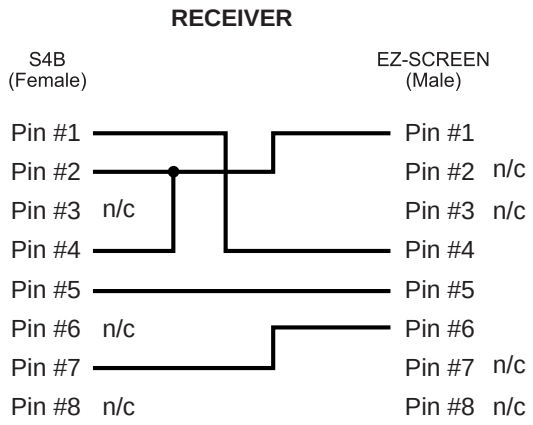

© Banner Engineering Corp. All rights reserved.
www.bannerengineering.com

Chapter 13 Standards and Regulations

The list of standards below is included as a convenience for users of this Banner device. Inclusion of the standards below does not imply that the device complies specifically with any standard, other than those specified in the Specifications/Design Standards section of this manual. See the American National Standards Institute (ANSI) at https://webstore.ansi.org/ or another source for applicable documents.

13.1 Applicable U.S. Standards

Not inclusive

ANSI B11 Standards for Machine Tools Safety

ANSI/RIA R15.06 Safety Requirements for Industrial Robots and Robot Systems

NFPA 79 Electrical Standard for Industrial Machinery

ANSI/PMMI B155.1 Package Machinery and Packaging-Related Converting Machinery — Safety Requirements

ANSI/ASSP Z244.1-2024 The Control of Hazardous Energy – Lockout, Tagout, and Alternative Methods

OSHA 29 CFR 1910 Occupational Safety and Health Standards

13.2 Applicable European and International Standards

Not inclusive

ISO 12100 Safety of Machinery – General Principles for Design – Risk Assessment and Risk Reduction

EN 60204-1 Electrical Equipment of Machines Part 1: General Requirements

ISO 13849-1 Safety of Machinery – Safety-Related Parts of Control Systems – Part 1: General Principles for Design

IEC 61508 Functional Safety of Electrical/Electronic/Programmable Electronic Safety-Related Systems

EN 13855 The Positioning of Protective Equipment in Respect to Approach Speeds of Parts of the Human Body

ISO 13857 Safety of Machinery – Safety Distances to Prevent Hazard Zones Being Reached

ISO 14120 Safety of machinery – Guards – General requirements for the design and construction of fixed and movable guards

Acquire a type C standard for your specific machinery.

© Banner Engineering Corp. All rights reserved.

Index

A

accessories
  safety controller 91
alignment
  optical 43
applications and limitation 10

B

beam strength
  weak 13
blanking
  floating 45
bracket 33

C

cascade 78
checkout
  initial 42
  periodic 68
checkout procedure card
  daily 87
  semi-annual 87
commissioning checkout 58
corner mirrors 29

D

daily checkout procedure card 87

E

electrical noise 76
electrical noise sources 77
emitter
  indicators 12, 65
  orientation 30
error codes 76

F

feature ID 9
FID 9
floating blanking 45

I

indicators
  emitter 12, 65
  receiver 12, 66
installation
  mechanical 22
IO-Link 70

L

literature 87
lockout 75

M

minimum distance 22

N

noise 76
noise sources
  electrical 77
  optical 77

O

optical alignment 43
optical noise 76
optical noise sources 77
orientation 30

P

power-up
  system 65

R

receiver
  error codes 76
  indicators 12, 66
  orientation 30
reduced resolution 45
response time 8, 83

S

safety controller 91
safety distance 22
scan code 13, 38
semi-annual checkout procedure card 87
specifications
  emitter 18
  general 17
  receiver 18

W

weak beam strength 13

© Banner Engineering Corp. All rights reserved.
www.bannerengineering.com

Glossary

ANSI

The American National Standards Institute (ANSI) is an association of industry representatives that develops technical standards (including safety standards). These standards comprise a consensus from a variety of industries on good practice and design. ANSI standards relevant to the application of safety products include the ANSI B11 Series, and ANSI/RIA R15.06.

automatic power-up

An automatic power-up is a light curtain system feature that, when switched on, enables the system to be powered up (and recover from a power interruption) without requiring a manual reset. When automatic power-up is on, the light curtain controller automatically begins internal diagnostics upon power-up and automatically resets the system if it passes the diagnostic check. When automatic power-up is off, a manual reset is required.

automatic reset

An automatic reset is the safety input device control operation setting where the assigned safety output automatically turns on when all of its associated input devices are in the Run state. No manual reset operation is required for the safety output to turn on when controlled only by safety input devices configured for automatic reset. When automatic reset is selected, the input device may be said to be configured to run in auto start/restart mode.

blocked condition

A block condition occurs when an opaque object of sufficient size blocks/interrupts one or more light curtain beams. When a blocked condition occurs, OSSD1 and OSSD2 outputs simultaneously turn off within the system response time.

cascade

A cascade is a series connection (or daisy-chain) of multiple emitters and receivers.

control reliability

Control reliability is a method of ensuring the performance integrity of a control system or device. Control circuits are designed and constructed so that a single failure or fault within the system does not prevent the normal stopping action from being applied to the machine when required, or does not create unintended machine action, but does prevent initiation of successive machine action until the failure is corrected.

defined area

The defined area is the "screen of light" generated by a safety light curtain system that is defined by the height and the safety distance (minimum distance) of the system.

Designated Person

A Designated Person is a person or persons identified and designated in writing, by the employer, as being appropriately trained and qualified to perform a specified checkout procedure.

emitter

light curtain The light curtain's emitter is the light-emitting component of a safety light curtain system, consisting of a row of synchronized modulated LEDs. The emitter, together with the receiver (placed opposite), creates a "screen of light" called the defined area.

external device monitoring

External device monitoring (EDM) is a means by which a safety device (such as a safety light curtain) actively monitors the state (or status) of external devices that are controlled by the safety device. A lockout of the safety device will result if an unsafe state is detected in the external device. External device(s) may include, but are not limited to: MPCEs, captive contact relays/contactors, and safety modules.

© Banner Engineering Corp. All rights reserved.
www.bannerengineering.com

failure to danger

Failure to danger is a failure that delays or prevents a machine safety system from arresting dangerous machine motion, thereby increasing risk to personnel.

final switching device

A final switching device (FSD) is the component of the machine's safety-related control system that interrupts the circuit to the machine primary control element (MPCE) when the output signal switching device (OSSD) goes to the OFF-state.

fixed blanking

Fixed blanking is a programming feature that allows a safety light curtain system to ignore objects (such as brackets or fixtures) that will always be present at a specific location within the defined area. The presence of these objects will not cause the system's safety outputs (for example, final switching devices) to trip or latch. If any fixed objects are moved within or removed from the defined area, a lockout condition results.

guarded machine

A guarded machine is the machine whose point of operation is guarded by the safety system.

hard (fixed) guard

Hard (fixed) guards are screens, bars, or other mechanical barriers affixed to the frame of the machine intended to prevent entry by personnel into the hazardous area(s) of a machine, while allowing the point of operation to be viewed. The maximum size of the openings is determined by the applicable standard, such as Table O-10 of OSHA 29CFR1910.217, also called a "fixed barrier guard."

harm

Harm is defined as physical injury or damage to the health of people, which may result through direct interaction with the machine or through indirect means, as a result of damage to property or to the environment.

hazard point

A hazard point is the closest reachable point of the hazardous area.

hazardous area

The hazardous area is an area that poses an immediate or impending physical hazard.

lockout condition

A lockout condition is a safety light curtain condition that is automatically attained in response to certain failure signals. When a lockout condition occurs, the safety light curtain's safety outputs turn off; the failure must be corrected and a manual reset is required to return the system to run mode.

machine primary control element

A machine primary control element (MPCE) is an electrically powered element, external to the safety system, that directly controls the machine's normal operating motion in such a way that the element is last (in time) to operate when the machine motion is either initiated or arrested.

machine response time

The machine response time is the time between the activation of a machine-stopping device and the instant when the dangerous parts of the machine reach a safe state by being brought to rest.

manual start/restart (latch)

Manual start/restart (latch) is when the safety outputs of a safety light curtain system turn off when an object completely blocks a beam. In a manual start/restart condition, the safety outputs stay off when the object is removed from the defined area. To re-energize the outputs, perform a proper manual reset.

© Banner Engineering Corp. All rights reserved.
www.bannerengineering.com

muting

Muting is the automatic suspension of the safeguarding function of a safety device during a non-hazardous portion of the machine cycle.

OSHA

The Occupational Safety and Health Administration (OSHA) is a U.S. Federal agency and division of the U.S. Department of Labor responsible for the regulation of workplace safety.

output signal switching device

The output signal switching devices (OSSD) are the safety outputs that are used to initiate a stop signal.

part-revolution clutch

A part-revolution clutch is a type of clutch that may be engaged or disengaged during the machine cycle. Part-revolution clutched machines use a clutch/brake mechanism, which can arrest machine motion at any point in the stroke or cycle.

pass-through hazard

A pass-through hazard is associated with applications where personnel may pass through a safeguard (which issues a stop command to remove the hazard), and then continues into the guarded area, such as in perimeter guarding. Subsequently, their presence is no longer detected, and the related danger becomes the unexpected start or restart of the machine while personnel are within the guarded area.

point-of-operation guarding

Point-of-operation guarding are safeguards, such as hard guards or safety light curtains, that are designed to protect personnel from hazardous machine motion when close to the machine’s point of operation.

presence-sensing device initiation

Presence-sensing device initiation (PSDI) is an application in which a presence-sensing device is used to actually start the cycle of a machine. In a typical situation, an operator manually positions a part in the machine for the operation. When the operator moves out of the danger area, the presence-sensing device starts the machine (no start switch is used). The machine cycle runs to completion, and the operator can then insert a new part and start another cycle. The presence-sensing device continually guards the machine. Single-break mode is used when the part is automatically ejected after the machine operation. Double-break mode is used when the part is both inserted (to begin the operation) and removed (after the operation) by the operator. PSDI is commonly confused with "Trip Initiate." PSDI is defined in OSHA CFR1910.217. Banner safety light curtain systems may not be used as PSDI devices on mechanical power presses, per OSHA regulation 29 CFR 1910.217.

Qualified Person

A Qualified Person is a person who, by possession of a recognized degree or certificate of professional training, or who, by extensive knowledge, training and experience, has successfully demonstrated the ability to solve problems relating to the subject matter and work.

receiver

light curtains The receiver is the light-receiving component of a safety light curtain system and consists of a row of synchronized phototransistors. The receiver, together with the emitter (placed opposite), creates a "screen of light" called the defined area.

reduced resolution

Reduced resolution is a feature that allows a safety light curtain system to be configured to produce an intentionally disabled light beam(s) within the light curtain, which increases the minimum object sensitivity. The disabled beam(s) appears to move up and down (float) to allow the feeding of an object through the defined area at any point without tripping the safety outputs (for example, OSSDs) and causing an auto start/restart (trip) or manual start/restart (latch) condition. Sometimes also called floating blanking.

© Banner Engineering Corp. All rights reserved.
www.bannerengineering.com

resolution

A safety light curtain's resolution is the minimum-diameter object that the safety light curtain system can reliably detect. Objects of this diameter or greater are detected anywhere in the defined area. A smaller object can pass undetected through the light if it passes exactly midway between two adjacent light beams.

safety distance

The safety distance is the minimum distance an engineered control (guard or device) is installed from a hazard such that individuals cannot reach the hazard point before it is stopped (or made safe). The safety distance required for an application depends on several factors, including the speed of the hand (or individual or object), the total system stopping time (which includes several response time components), and the depth penetration factor. Refer to the relevant standard to determine the appropriate distance or means to ensure that individuals cannot be exposed to the hazard(s).

self-checking

A self-checking circuit has the capability to electronically verify that all of its own critical circuit components, along with their redundant backups, are operating properly. Banner Engineering safety light curtain systems and safety modules are self-checking.

supplemental guarding

Supplemental guarding is additional safeguarding device(s) or hard guarding, used to prevent a person from reaching over, under, through or around the primary safeguard or otherwise accessing the guarded hazard.

test piece

A test piece is an opaque object of sufficient size used to block a light beam to test the operation of a safety light curtain system. When inserted into the defined area and placed in front of a beam, the test piece causes the outputs to de-energize.

© Banner Engineering Corp. All rights reserved.

LinkedIn

X

Facebook

Instagram



© 2026. All rights reserved.
www.bannerengineering.com