MODEL NO.	"L"	P/N
PIT46UHFM3-8M.75	2000 [79]	75989

*'HF' DENOTES HIGH-FLEX FIBER CABLE - VERY SMALL BEND RADIUS PERMISSIBLE BEFOR TRANSMISSON LOSS.

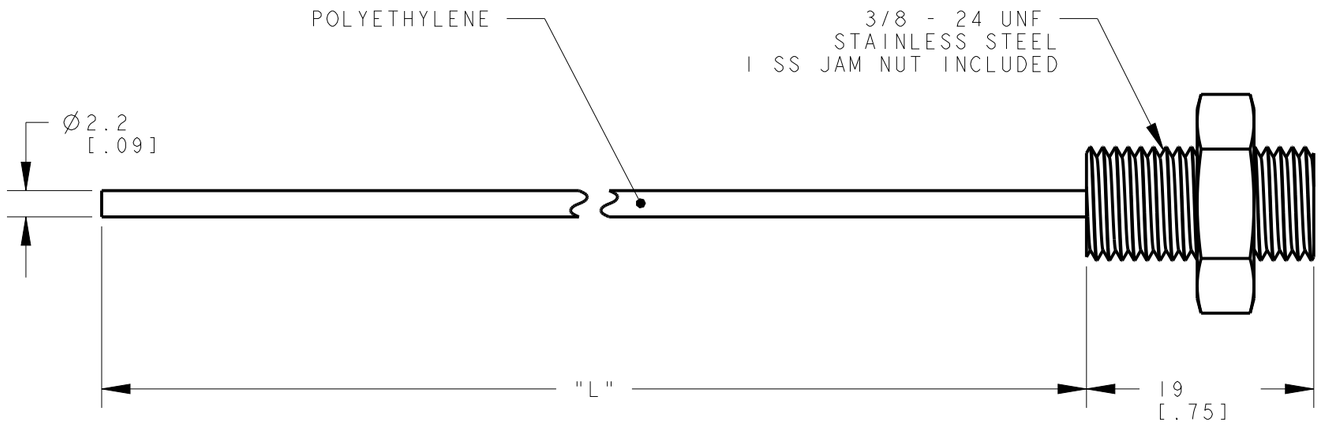

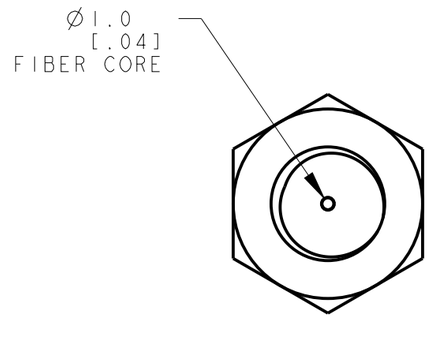

NOTES:
1. ALL DIMENSIONS ARE MILLIMETERS [INCHES] UNLESS OTHERWISE NOTED.
2. REFER TO "www.bannerengineering.com" FOR ADDITIONAL DATA AND SPECIFICATIONS.

This drawing is the property of BANNER ENGINEERING CORP. Any use or reproduction, in any form, without prior written permission of Banner is prohibited.
© 2015 Banner Engineering Corp.

THIRD ANGLE PROJECTION

BANNER ENGINEERING CORP.
www.bannerengineering.com

TITLE
PIT4 HIGH FLEX MODIFIED 3-8 X.75 UNTERMINATED

SIZE	DRAWING NO.	REV.
B	193351	A
SCALE 2:1	SHEET 1 OF 1	

CREO

ПРОМЭЛЕКТРОНИКА/ sales@prom-elec.com