LMB Series Sealed Right-Angle Brackets

Datasheet

Watertight (IP67) mount for direct-mount or pipe-mount sensors or indicators with a 30 mm threaded base

To view or download the latest technical information about this product, including specifications, dimensions, accessories, and wiring, see *http://www.bannerengineering.com*.

Models

Model	Description	Construction
LMB30RA	Bracket kit with base, 30 mm adapter, set screw, fasteners, o-rings and gaskets	Black polycarbonate
LMB30RAC		Gray polycarbonate

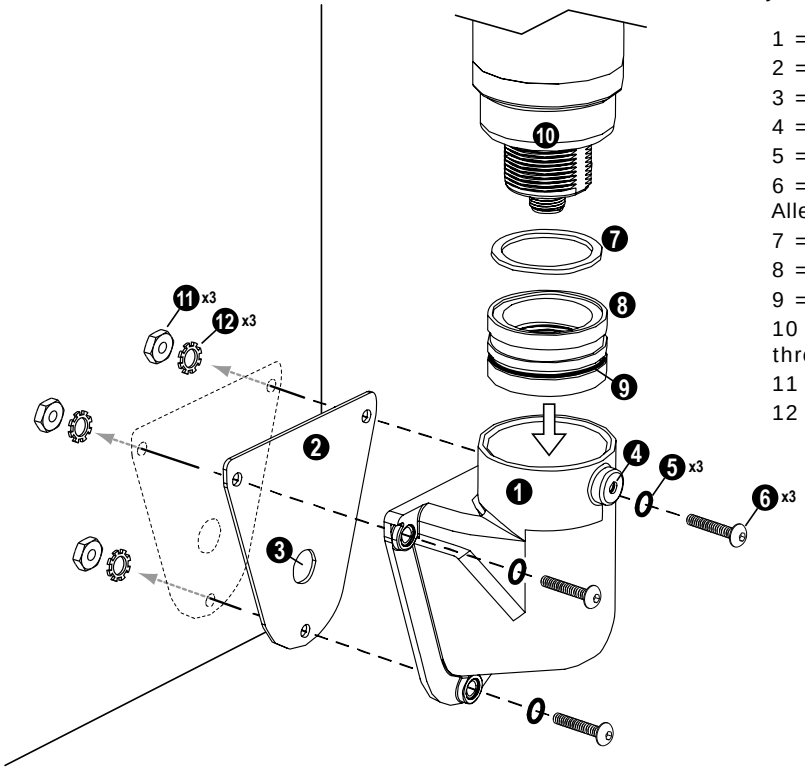

Key

1 = Right-angle bracket base
2 = Base gasket
3 = Base gasket wiring access port
4 = 8-32 set screw
5 = (3) o-rings
6 = (3) 5 mm button-head screws (requires M3 Allen wrench, user-supplied)
7 = 30 mm round gasket
8 = 30 mm adapter
9 = (1) 30 mm o-ring
10 = Sensor or light to be mounted, M30 × 1.5 thread
11 = M5 hex nut
12 = M5 external tooth lock washer

Installation Instructions

To achieve an IP67 installation, assemble the bracket and light components as shown.

1. Using the base gasket as a template, mark drill holes (5.5 mm) in the mounting surface for the three screw holes and one (12.7 mm) for the wiring to extend through the surface, as needed.
2. Holding the bracket base and gasket firmly against the mounting surface, insert an o-ring on each M5 screw and fasten using the washers and nuts supplied with the bracket.
3. Insert the 30 mm gasket onto the light/sensor threaded base.
4. Screw the 30 mm adapter onto the light/sensor base (hand-tight), in the orientation as shown in the exploded drawing.
5. Verify the o-ring is in place on the adapter, as shown in the exploded drawing.

Original Document
157631 Rev. B

23 September 2015

157631

ПРОМЭЛЕКТРОНИКА/ sales@prom-elec.com

Additional Steps for Direct-Mount Applications

1. Route the cable or QD cordset through the bracket. If sensor/indicator has a QD fitting, attach the cordset fitting firmly to the sensor/indicator connector.
2. Rotate the light (or sensor) relative to the base until the correct orientation is achieved; press the light and adapter into the base. (If rotating the light after it is in the base, turn it only in a clockwise direction.)
3. Tighten the set screw to 0.17 Nm (1.5 in-lbf) max. torque, using the supplied M3 Allen wrench.

Models

Model	Description	Construction
LMBE12RA	Bracket kit with base, ½-14 pipe adapter, set screw, fasteners, o-rings and gaskets. For use with stand-off pipe (listed and sold separately).	Black polycarbonate
LMBE12RAC		Gray polycarbonate

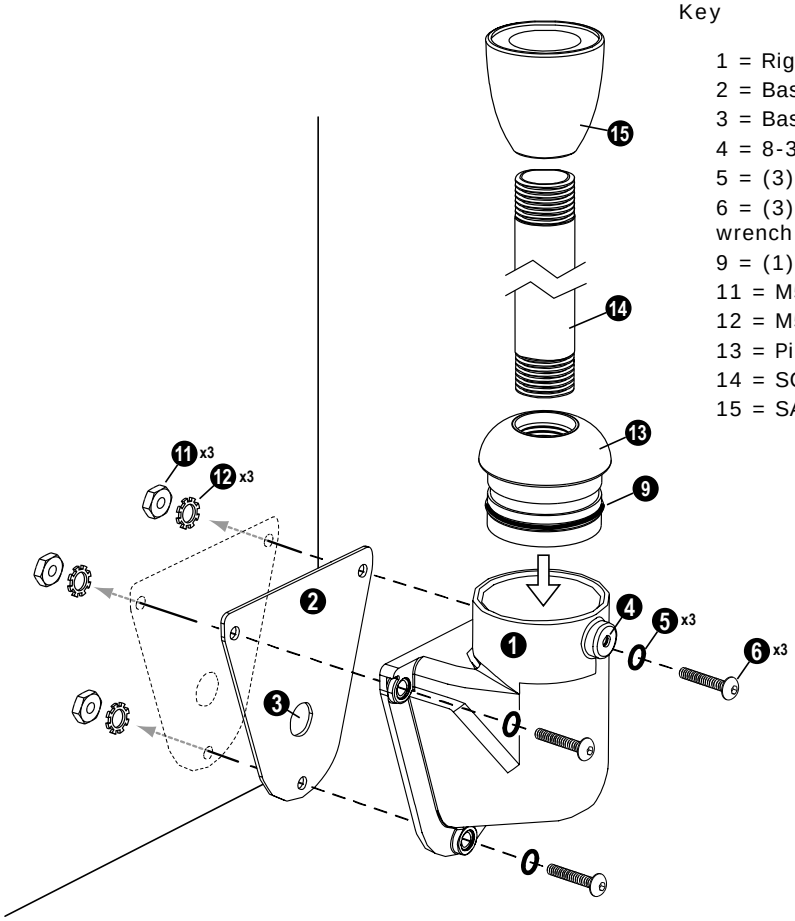

Key

1 = Right-angle bracket base
2 = Base gasket
3 = Base gasket wiring access port
4 = 8-32 set screw
5 = (3) o-rings
6 = (3) 5 mm button-head screws (requires M3 Allen wrench, user-supplied)
9 = (1) 30 mm o-ring
11 = M5 hex nut
12 = M5 external tooth lock washer
13 = Pipe adapter
14 = SOP-E... Stand-off pipe (optional)
15 = SA-M30TE12 stand-off pipe (optional)

Additional Steps for Pipe-Mount Applications

1. Use a pipe sealant to seal the pipe end adapter, if a watertight connection is needed.
2. Insert the pipe adapter firmly into the base.
3. position the threaded pipe end into the adapter and screw snugly.
4. Attach the SA-M30TE12 stand-off pipe adapter to the pipe, screw snugly.
5. Route the cable or QD cordset through the bracket, pipe, and adapters. If sensor/indicator has a QD fitting, attach the cordset fitting firmly to the sensor/indicator connector.
6. Attach the sensor/indicator to the SA-M30TE12 stand-off pipe adapter. Rotate the light (or sensor) relative to the base until the correct orientation is achieved; press the light and adapter into the base.

Pipe Model	Description		Construction
SOP-E12-150SS	• Elevated-use stand-off pipe (½ inch NPSM/DN15), • ½ NPT thread at both ends • Compatible with most industrial environments	150 mm (6 in) long	Polished 304 stainless steel
SOP-E12-150A			Black anodized aluminum
SOP-E12-150AC			Clear anodized aluminum
SOP-E12-300SS		300 mm (12 in) long	Polished 304 stainless steel
SOP-E12-300A			Black anodized aluminum
SOP-E12-300AC			Clear anodized aluminum
SA-M30TE12	• Streamlined stand-off pipe adapter/cover • Connects between 30 mm light base and ½ inch NPSM/DN15 pipe • Mounting hardware included		Black acetal
SA-M30TE12C			White UHMW

Dimensions

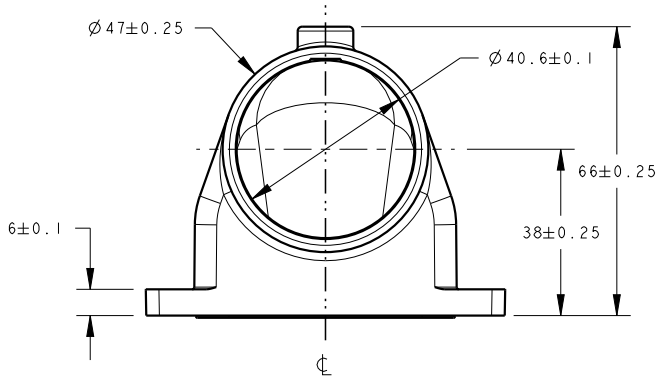

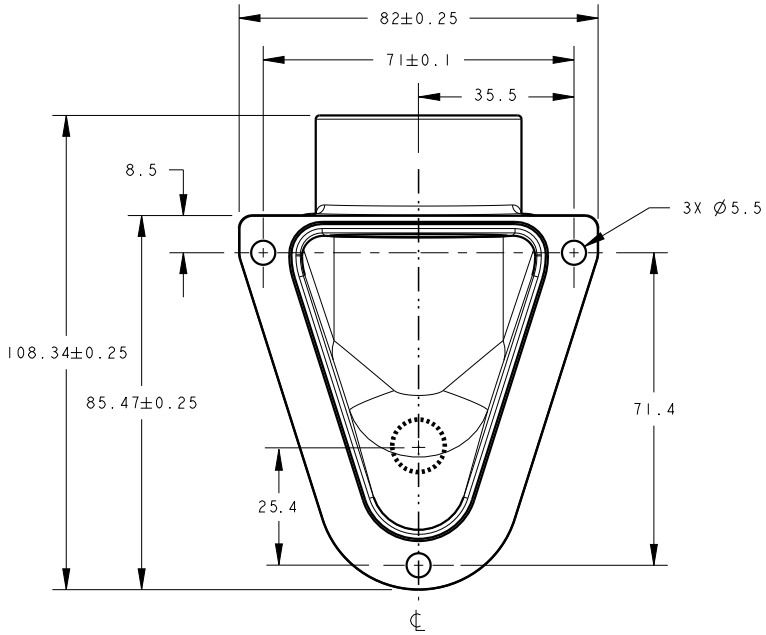

Banner Engineering Corp. Limited Warranty

Banner Engineering Corp. warrants its products to be free from defects in material and workmanship for one year following the date of shipment. Banner Engineering Corp. will repair or replace, free of charge, any product of its manufacture which, at the time it is returned to the factory, is found to have been defective during the warranty period. This warranty does not cover damage or liability for misuse, abuse, or the improper application or installation of the Banner product.

THIS LIMITED WARRANTY IS EXCLUSIVE AND IN LIEU OF ALL OTHER WARRANTIES WHETHER EXPRESS OR IMPLIED (INCLUDING, WITHOUT LIMITATION, ANY WARRANTY OF MERCHANTABILITY OR FITNESS FOR A PARTICULAR PURPOSE), AND WHETHER ARISING UNDER COURSE OF PERFORMANCE, COURSE OF DEALING OR TRADE USAGE.

This Warranty is exclusive and limited to repair or, at the discretion of Banner Engineering Corp., replacement. IN NO EVENT SHALL BANNER ENGINEERING CORP. BE LIABLE TO BUYER OR ANY OTHER PERSON OR ENTITY FOR ANY EXTRA COSTS, EXPENSES, LOSSES, LOSS OF PROFITS, OR ANY INCIDENTAL, CONSEQUENTIAL OR SPECIAL DAMAGES RESULTING FROM ANY PRODUCT DEFECT OR FROM THE USE OR INABILITY TO USE THE PRODUCT, WHETHER ARISING IN CONTRACT OR WARRANTY, STATUTE, TORT, STRICT LIABILITY, NEGLIGENCE, OR OTHERWISE.

Banner Engineering Corp. reserves the right to change, modify or improve the design of the product without assuming any obligations or liabilities relating to any product previously manufactured by Banner Engineering Corp.