MODEL NO.	"L"	"PL"	P/N
PBPS415U	4572 [180]	51 [2.0]	51794
PBPS430U	9144 [360]	51 [2.0]	41530
PBPS46U	2000 [79]	51 [2.0]	35040

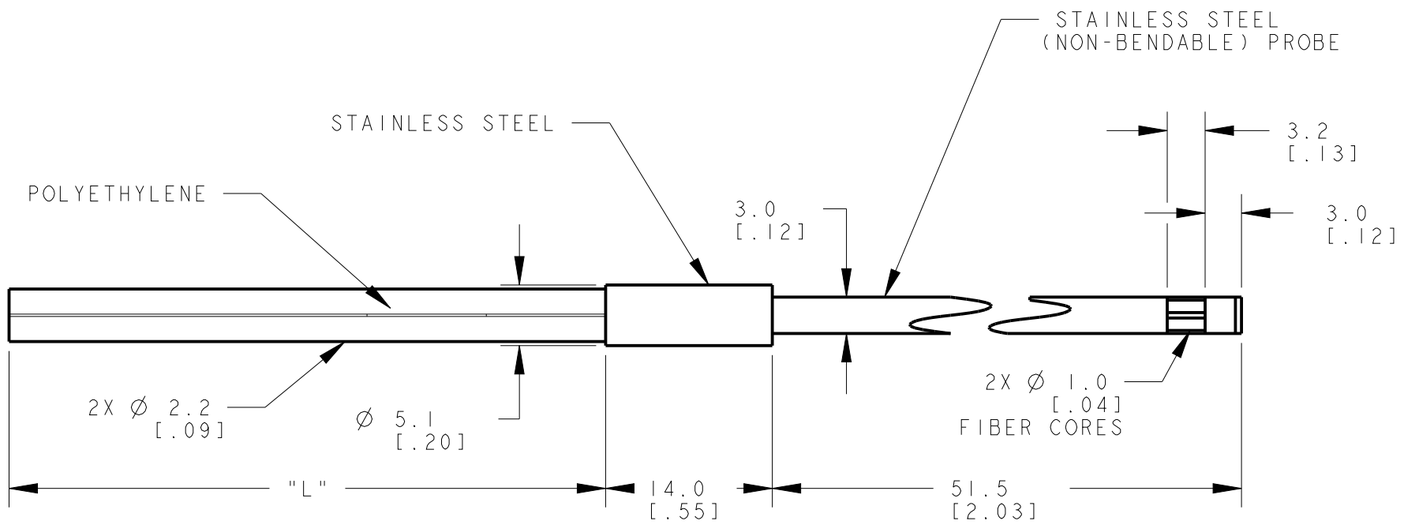

NOTES:
1. ALL DIMENSIONS ARE MILLIMETERS [INCHES] UNLESS OTHERWISE NOTED.
2. REFER TO "www.bannerengineering.com" FOR ADDITIONAL DATA AND SPECIFICATIONS.

This drawing is the property of BANNER ENGINEERING CORP. Any use or reproduction, in any form, without prior written permission of Banner is prohibited.
© 2015 Banner Engineering Corp.

THIRD ANGLE PROJECTION

BANNER ENGINEERING CORP.
www.bannerengineering.com

TITLE

PBPS4 SERIES UNTERMINATED

SIZE	DRAWING NO.	REV.
B	176183	A
SCALE 2:1	SHEET 1 OF 1	

CREO

ПРОМЭЛЕКТРОНИКА/ sales@prom-elec.com