MODEL NO.	"TL"	"L"	P/N
PBT4100U	14.0 [.55]	30480 [1200]	76453
PBT4.5U	14.0 [.55]	152 [6]	48037
PBT450U	14.0 [.55]	15240 [600]	31414
PBT460U	14.0 [.55]	18288 [720]	32928
PBT475U	14.0 [.55]	22860 [900]	28472
PBT430U	14.0 [.55]	9906 [390]	27365
PBT415U	14.0 [.55]	4953 [195]	26564
PBT46U	14.0 [.55]	2000 [79]	25967

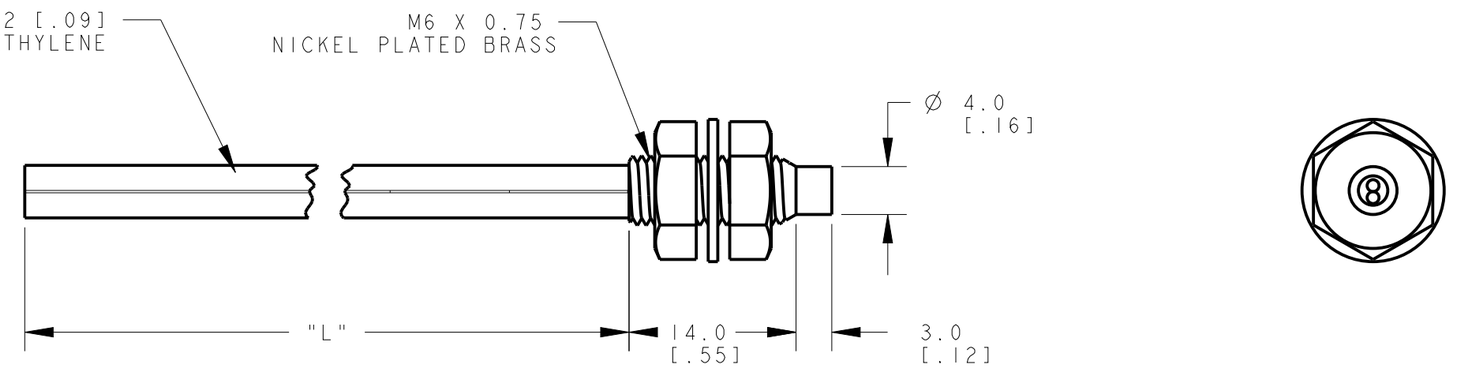

NOTES:
1. ALL DIMENSIONS ARE MILLIMETERS [INCHES] UNLESS OTHERWISE NOTED.
2. REFER TO "www.bannerengineering.com" FOR ADDITIONAL DATA AND SPECIFICATIONS.

This drawing is the property of BANNER ENGINEERING CORP. Any use or reproduction, in any form, without prior written permission of Banner is prohibited.
© Banner Engineering Corp.

THIRD ANGLE PROJECTION

BANNER ENGINEERING CORP.
www.bannerengineering.com

TITLE

PBT4 SERIES UNTERMINATED

SIZE	DRAWING NO.	REV.
B	161864	A
SCALE 2:1	SHEET 1 OF 1	

CREO

ПРОМЭЛЕКТРОНИКА/ sales@prom-elec.com