# EZ-LIGHT® Touch K70 Series Illuminated Multipurpose Buttons

## Features

*General Purpose Multicolor Indicator with Independent Momentary Touch Button Output*



- Excellent immunity to false triggering by water spray, detergents, oils, and other foreign materials
- Rugged, cost-effective, and easy-to-install multicolor indicator with touch button
- Three independent colors in one unit: Color 3 overrides Colors 1 and 2, Color 2 overrides Color 1
- Available with PNP and NPN inputs/outputs, depending on the model
- Ergonomically designed to eliminate hand, wrist, and arm stresses associated with repeated switch operation; requires no physical force to operate
- Can be actuated with bare hands or gloves
- 12 V DC to 30 V DC operation

**WARNING:**

- **Do not use this device for personnel protection**
- Using this device for personnel protection could result in serious injury or death.
- This device does not include the self-checking redundant circuitry necessary to allow its use in personnel safety applications. A device failure or malfunction can cause either an energized (on) or de-energized (off) output condition.

## Models

| Model | I/O Type | Output State | Color 1 | Color 2 | Color 3 | Connection[1] |
|---|---|---|---|---|---|---|
| K70APT2GRYF2 | PNP | N.O. | Green | Red | Yellow | 2 m (6.5 ft) integral PVC-jacketed cable |
| K70APT2GRYF2Q | | | | | | Integral 8-pin M12 male quick-disconnect connector |
| K70APT2GRYF2QP | | | | | | 150 mm (6 in) PVC-jacketed cable with an 8-pin M12 male quick-disconnect connector |
| K70ANT2GRYF2Q | NPN | | | | | Integral 8-pin M12 male quick-disconnect connector |

The following models are no longer available for order but are still covered by the information in this document.

| Model | I/O Type | Output State | Color 1 | Color 2 | Color 3 | Connection[1] |
|---|---|---|---|---|---|---|
| K70RPT2GRYF2 | PNP | N.C. | Green | Red | Yellow | 2 m (6.5 ft) integral PVC-jacketed cable |
| K70ANT2GRYF2 | NPN | N.O. | | | | |
| K70RNT2GRYF2 | | N.C. | | | | |
| K70RPT2GRYF2Q | PNP | | | | | Integral 8-pin M12 male quick-disconnect connector |
| K70RNT2GRYF2Q | NPN | | | | | |
| K70RPT2GRYF2QP | PNP | | | | | 150 mm (6 in) PVC-jacketed cable with an 8-pin M12 male quick-disconnect connector |
| K70ANT2GRYF2QP | NPN | N.O. | | | | |
| K70RNT2GRYF2QP | | N.C. | | | | |

[1] Models with a quick-disconnect connector require a mating cordset.

Original Instructions
04-May-26

© Banner Engineering Corp. All rights reserved.
www.bannerengineering.com

189841
p/n: 189841 Rev. D

ПРОМЭЛЕКТРОНИКА/ sales@prom-elec.com

# Indicator and Output Behavior

*PNP Models*

| Input Actions | | | | Touch Button Actions | | |
|---|---|---|---|---|---|---|
| Input #1: Pin 3 Green Wire | Input #2: Pin 8 Red Wire | Input #3: Pin 4 Yellow Wire | LED Color | Output Type | Touch | Output: Pin 1 White Wire |
| Open or -V DC | Open or -V DC | Open or -V DC | Light Off | N.O. | Not touched | PNP Output Off |
| +V DC | Open or -V DC | Open or -V DC | Color #1 On | | Touched | PNP Output On |
| +V DC | +V DC | Open or -V DC | Color #2 On | N.C. | Not touched | PNP Output On |
| +V DC | +V DC | +V DC | Color #3 On | | Touched | PNP Output Off |
| Open or -V DC | +V DC | Open or -V DC | Color #2 On | | | |
| Open or -V DC | +V DC | +V DC | Color #3 On | | | |
| Open or -V DC | Open or -V DC | +V DC | Color #3 On | | | |
| +V DC | Open or -V DC | +V DC | Color #3 On | | | |

*NPN Models*

| Input Actions | | | | Touch Button Actions | | |
|---|---|---|---|---|---|---|
| Input #1: Pin 3 Green Wire | Input #2: Pin 8 Red Wire | Input #3: Pin 4 Yellow Wire | LED Color | Output Type | Touch | Output: Pin 1 White Wire |
| Open or +V DC | Open or +V DC | Open or +V DC | Light Off | N.O. | Not touched | NPN Output Off |
| -V DC | Open or +V DC | Open or +V DC | Color #1 On | | Touched | NPN Output On |
| -V DC | -V DC | Open or +V DC | Color #2 On | N.C. | Not touched | NPN Output On |
| -V DC | -V DC | -V DC | Color #3 On | | Touched | NPN Output Off |
| Open or +V DC | -V DC | Open or +V DC | Color #2 On | | | |
| Open or +V DC | -V DC | -V DC | Color #3 On | | | |
| Open or +V DC | Open or +V DC | -V DC | Color #3 On | | | |
| -V DC | Open or +V DC | -V DC | Color #3 On | | | |

# Wiring

**NPN Output Models**

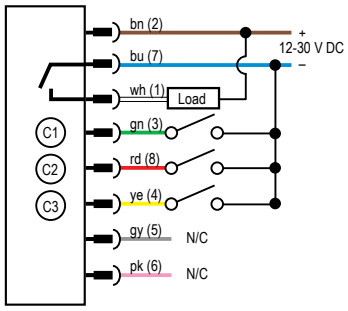


**PNP Output Models**

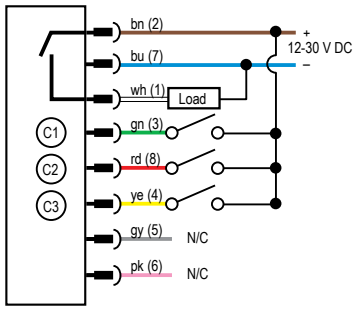


**Wiring Key**

1 = White
2 = Brown
3 = Green
4 = Yellow
5 = Gray
6 = Pink
7 = Blue
8 = Red

**Pinout**

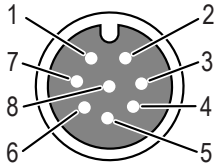


# Specifications

**Supply Voltage**

12 V DC to 30 V DC

**Supply Current**

< 220 mA maximum current at 12 V DC (exclusive of load)

< 110 mA maximum current at 30 V DC (exclusive of load)

**Supply Protection Circuitry**

Protected against reverse polarity and transient voltages

**Output Rating**

Maximum load: 150 mA

ON-State saturation voltage: < 2 V DC at 10 mA ; < 2.5 V DC at 150 mA

OFF-State leakage current: < 10 µA at 30 V DC

**Output Response Time:**

50 ms ON and OFF

**Storage**

–40 °C to +70 °C (–40 °F to +158 °F)


© Banner Engineering Corp. All rights reserved.
www.bannerengineering.com

### Operating Conditions

–40 °C to +50 °C (–40 °F to +122 °F)

90% at +50 °C maximum relative humidity (non-condensing)

### Vibration and Mechanical Shock

Vibration: 10 Hz to 55 Hz, 1.0 mm peak-to-peak amplitude per IEC 60068-2-6

Shock: 30G 11 ms duration, half sine wave per IEC 60068-2-27

### Power-Up Delay

300 ms

### Construction

Housing and dome: Polycarbonate

Mounting nut: PBT

### Connections

Integral 8-pin M12 male quick-disconnect connector; 2 m (6.5 ft) unterminated 3-wire PVC-jacketed cable; or 150 mm (6 in) PVC-jacketed cable with an 8-pin M12 male quick-disconnect connector

### Certifications

Banner Engineering BV
Park Lane, Culliganlaan 2F bus 3
1831 Diegem, BELGIUM

### Indicator Lumens

| Color | Typical Wavelength | Typical Intensity (lm) |
|---|---|---|
| Green | 525 nm | 45 |
| Red | 625 nm | 26 |
| Yellow | 590 nm | 13 |

### Mounting

M30 × 1.5 threaded base; maximum torque 4.5 N·m (40 in·lbf)

### Environmental Rating

IP65

### Required Overcurrent Protection

**WARNING:** Electrical connections must be made by qualified personnel in accordance with local and national electrical codes and regulations.

Overcurrent protection is required to be provided by end product application per the supplied table.

Overcurrent protection may be provided with external fusing or via Current Limiting, Class 2 Power Supply.

Supply wiring leads < 24 AWG shall not be spliced.

For additional product support, go to www.bannerengineering.com.

| Supply Wiring (AWG) | Required Overcurrent Protection (A) | Supply Wiring (AWG) | Required Overcurrent Protection (A) |
|---|---|---|---|
| 20 | 5.0 | 26 | 1.0 |
| 22 | 3.0 | 28 | 0.8 |
| 24 | 2.0 | 30 | 0.5 |

## Dimensions

All measurements are listed in millimeters [inches], unless noted otherwise. The measurements provided are subject to change.

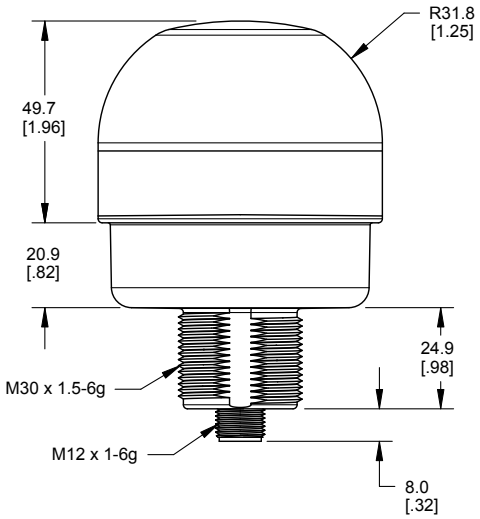


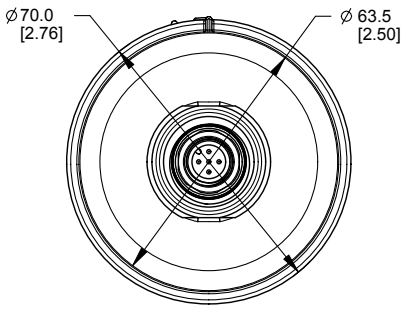



© Banner Engineering Corp. All rights reserved.
www.bannerengineering.com

# Accessories

## Cordsets

| 8-Pin Single-Ended M12 Female Open-Shielded Cordsets | | | | |
|---|---|---|---|---|
| **Model** | **Length** | **Style** | **Dimensions** | **Pinout (Female)** |
| **MQDC2S-806** | 2.04 m (6.7 ft) | Straight | 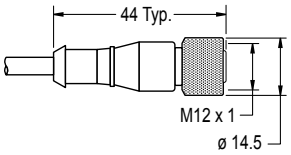 | 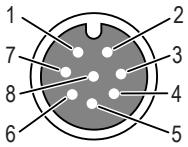 1 = White<br>2 = Brown<br>3 = Green<br>4 = Yellow<br>5 = Gray<br>6 = Pink<br>7 = Blue<br>8 = Red |
| **MQDC2S-815** | 5.04 m (16.54 ft) | | | |
| **MQDC2S-830** | 10.04 m (32.95 ft) | | | |
| **MQDC2S-850** | 16 m (52.49 ft) | | | |
| **MQDC2S-806RA** | 2 m (6.56 ft) | Right-Angle | 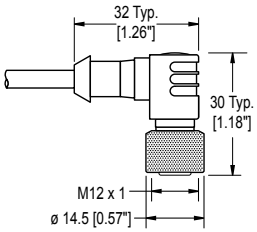 | |
| **MQDC2S-815RA** | 5 m (16.4 ft) | | | |
| **MQDC2S-830RA** | 10 m (32.81 ft) | | | |
| **MQDC2S-850RA** | 16 m (52.49 ft) | | | |

## Brackets

**SMB30A**
- Right-angle bracket with curved slot for versatile orientation
- Clearance for M6 (¼ in) hardware
- Mounting hole for 30 mm sensor
- 12-gauge stainless steel
- CAD Files: DXF, PDF, IGS, STP

**Hole center spacing:** A to B=40
**Hole size:** A=ø 6.3, B= 27.1 × 6.3, C=ø 30.5

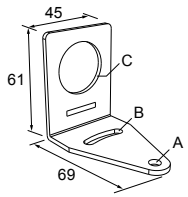


**SSA-MBK-EEC1**
- Single 30 mm hole
- 8 gauge steel, black finish (powder coat)
- Front surface for customer-applied labels
- CAD Files: DXF, PDF, IGS, STP

**Hole size:** A = ø 7 , B = ø 30

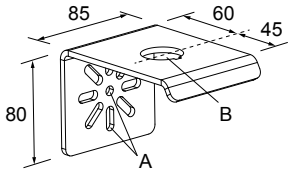


**SMB30MM**
- 12-gauge stainless steel bracket with curved mounting slots for versatile orientation
- Clearance for M6 (¼ in) hardware
- Mounting hole for 30 mm sensor
- CAD Files: DXF, PDF, IGS, STP

**Hole center spacing:** A=51, A to B=25.4
**Hole size:** A=42.6 × 7, B=ø 6.4, C=ø 30.1

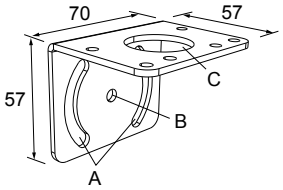


**SMB30RAVK**
- V-clamp, right-angle bracket and fasteners for mounting sensors to pipe or extrusion
- Clamp accommodates 28 mm dia. tubing or 1 in. square extrusions
- 30 mm hole for mounting sensors
- CAD Files: DXF, PDF, IGS, STP

**Hole size:** A=ø 30.5

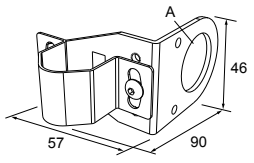



© Banner Engineering Corp. All rights reserved.
www.bannerengineering.com

**SMBAMS30P**

- Flat SMBAMS series bracket
- 30 mm hole for mounting sensors
- Articulation slots for 90°+ rotation
- 12-gauge 300 series stainless steel
- CAD Files: DXF, PDF, IGS, STP

**Hole center spacing:** A=26.0, A to B=13.0
**Hole size:** A=26.8 × 7.0, B=ø 6.5, C=ø 31.0

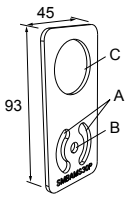


# Banner Engineering Corp Limited Warranty

Banner Engineering Corp. warrants its products to be free from defects in material and workmanship for one year following the date of shipment. Banner Engineering Corp. will repair or replace, free of charge, any product of its manufacture which, at the time it is returned to the factory, is found to have been defective during the warranty period. This warranty does not cover damage or liability for misuse, abuse, or the improper application or installation of the Banner product.

**THIS LIMITED WARRANTY IS EXCLUSIVE AND IN LIEU OF ALL OTHER WARRANTIES WHETHER EXPRESS OR IMPLIED (INCLUDING, WITHOUT LIMITATION, ANY WARRANTY OF MERCHANTABILITY OR FITNESS FOR A PARTICULAR PURPOSE), AND WHETHER ARISING UNDER COURSE OF PERFORMANCE, COURSE OF DEALING OR TRADE USAGE.**

This Warranty is exclusive and limited to repair or, at the discretion of Banner Engineering Corp., replacement. **IN NO EVENT SHALL BANNER ENGINEERING CORP. BE LIABLE TO BUYER OR ANY OTHER PERSON OR ENTITY FOR ANY EXTRA COSTS, EXPENSES, LOSSES, LOSS OF PROFITS, OR ANY INCIDENTAL, CONSEQUENTIAL OR SPECIAL DAMAGES RESULTING FROM ANY PRODUCT DEFECT OR FROM THE USE OR INABILITY TO USE THE PRODUCT, WHETHER ARISING IN CONTRACT OR WARRANTY, STATUTE, TORT, STRICT LIABILITY, NEGLIGENCE, OR OTHERWISE.**

Banner Engineering Corp. reserves the right to change, modify or improve the design of the product without assuming any obligations or liabilities relating to any product previously manufactured by Banner Engineering Corp. Any misuse, abuse, or improper application or installation of this product or use of the product for personal protection applications when the product is identified as not intended for such purposes will void the product warranty. Any modifications to this product without prior express approval by Banner Engineering Corp will void the product warranties. All specifications published in this document are subject to change; Banner reserves the right to modify product specifications or update documentation at any time. Specifications and product information in English supersede that which is provided in any other language. For the most recent version of any documentation, refer to: www.bannerengineering.com.

For patent information, see www.bannerengineering.com/patents.


© Banner Engineering Corp. All rights reserved.
www.bannerengineering.com