EZ-LIGHT® Touch Gen 2 K50 FDA-Grade Illuminated Multipurpose Buttons

Features

General Purpose Multicolor Indicator with Independent Momentary Touch Button Output



- FDA-grade materials; rated to IP67, IP68, and IP69K
- Laser-marked information withstands aggressive cleaning procedures
- Excellent immunity to false triggering by water spray, detergents, oils, and other foreign materials
- Rugged, cost-effective, and easy-to-install multicolor indicator with touch button
- Three independent colors in one unit: Color 3 overrides Colors 1 and 2, Color 2 overrides Color 1
- Available with PNP and NPN inputs/outputs, depending on the model
- Ergonomically designed to eliminate hand, wrist, and arm stresses associated with repeated switch operation; requires no physical force to operate
- Can be actuated with bare hands or gloves
- 12 V DC to 30 V DC operation

WARNING:

- **Do not use this device for personnel protection**
- Using this device for personnel protection could result in serious injury or death.
- This device does not include the self-checking redundant circuitry necessary to allow its use in personnel safety applications. A device failure or malfunction can cause either an energized (on) or de-energized (off) output condition.

Models

Model[1]	I/O Type	Output State	Color 1	Color 2	Color 3	Connection
K50APT2FGRYF2QP	PNP	N.O.	Green	Red	Yellow	150 mm (6 in) PVC-jacketed cable with an 8-pin M12 male, stainless steel quick-disconnect connector
K50RPT2FGRYF2QP		N.C.				
K50ANT2FGRYF2QP	NPN	N.O.				
K50RNT2FGRYF2QP		N.C.				

Wiring Diagram

NPN Output Models

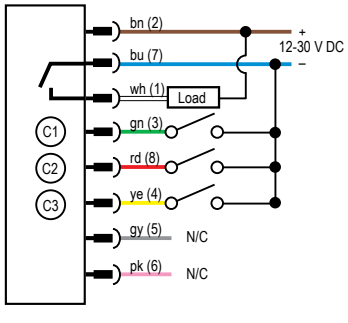

PNP Output Models

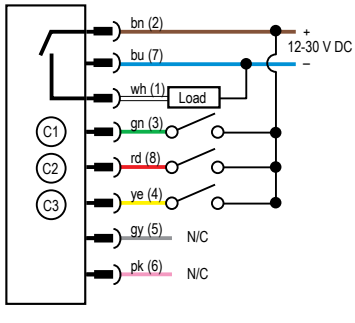

Wiring Key

1 = White
2 = Brown
3 = Green
4 = Yellow
5 = Gray
6 = Pink
7 = Blue
8 = Red

Pinout

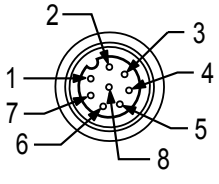

Indicator and Output Behavior

PNP Models

Input Actions				Touch Button Actions		
Input #1: Pin 3 Green Wire	**Input #2: Pin 8 Red Wire**	**Input #3: Pin 4 Yellow Wire**	**LED Color**	**Output Type**	**Touch**	**Output: Pin 1 White Wire**
Open or -V DC	Open or -V DC	Open or -V DC	Light Off	N.O.	Not touched	PNP Output Off
+V DC	Open or -V DC	Open or -V DC	Color #1 On		Touched	PNP Output On
+V DC	+V DC	Open or -V DC	Color #2 On	N.C.	Not touched	PNP Output On

Continued on page 2

[1] To order the 2 m (6.5 ft) PVC cable model, omit the suffix "QP" in the model number. For example, K50APT2FGRYF2.

Original Instructions
19-Jun-25

© Banner Engineering Corp. All rights reserved.
www.bannerengineering.com

189837
p/n: 189837 Rev. D

ПРОМЭЛЕКТРОНИКА/ sales@prom-elec.com

Continued from page 1

Input Actions				Touch Button Actions		
Input #1: Pin 3 Green Wire	Input #2: Pin 8 Red Wire	Input #3: Pin 4 Yellow Wire	LED Color	Output Type	Touch	Output: Pin 1 White Wire
+V DC	+V DC	+V DC	Color #3 On		Touched	PNP Output Off
Open or -V DC	+V DC	Open or -V DC	Color #2 On			
Open or -V DC	+V DC	+V DC	Color #3 On			
Open or -V DC	Open or -V DC	+V DC	Color #3 On			
+V DC	Open or -V DC	+V DC	Color #3 On			

NPN Models

Input Actions				Touch Button Actions		
Input #1: Pin 3 Green Wire	Input #2: Pin 8 Red Wire	Input #3: Pin 4 Yellow Wire	LED Color	Output Type	Touch	Output: Pin 1 White Wire
Open or +V DC	Open or +V DC	Open or +V DC	Light Off	N.O.	Not touched	NPN Output Off
-V DC	Open or +V DC	Open or +V DC	Color #1 On		Touched	NPN Output On
-V DC	-V DC	Open or +V DC	Color #2 On	N.C.	Not touched	NPN Output On
-V DC	-V DC	-V DC	Color #3 On		Touched	NPN Output Off
Open or +V DC	-V DC	Open or +V DC	Color #2 On			
Open or +V DC	-V DC	-V DC	Color #3 On			
Open or +V DC	Open or +V DC	-V DC	Color #3 On			
-V DC	Open or +V DC	-V DC	Color #3 On			

Specifications

Supply Voltage

12 V DC to 30 V DC

Supply Current

< 75 mA max current at 12 V DC (exclusive of load)

< 50 mA max current at 30 V DC (exclusive of load)

Supply Protection Circuitry

Protected against reverse polarity and transient voltages

Output Rating

Maximum load: 150 mA

ON-state saturation voltage: < 2 V DC at 10 mA; < 2.5 V DC at 150 mA

OFF-state leakage current: <10 µA at 30 V DC

Output Response Time

50 milliseconds On and Off

Environmental Rating

IP67, IP69K per ISO 20653

Operating Conditions

–40 °C to +50 °C (–40 °F to +122 °F)

90% at 50 °C maximum relative humidity (non-condensing)

Storage

–40 °C to +70 °C (–40 °F to +158 °F)

Vibration and Mechanical Shock

Vibration: 10 Hz to 55 Hz, 1.0 mm peak-to-peak amplitude per IEC 60068-2-6

Shock: 30G 11 ms duration, half sine wave per IEC 60068-2-27

Connections

150 mm (6 in) PVC-jacketed cable with an 8-pin M12 male, stainless steel quick-disconnect connector, or 2 m (6.5 ft) integral PVC-jacketed cable

Construction

Base, dome, and nut: FDA-grade polycarbonate

Mounting

M30 × 1.5 threaded base max. torque 4.5 N·m (40 in·lbf)

Power-Up Delay

300 milliseconds

Indicators

Color 1: Green

Color 2: Red

Color 3: Yellow

Indicator Lumens

Color	Typical Wavelength	Typical Intensity (lm)
Green	525 nm	29
Red	625 nm	13
Yellow	591 nm	24

Required Overcurrent Protection

WARNING: Electrical connections must be made by qualified personnel in accordance with local and national electrical codes and regulations.

Overcurrent protection is required to be provided by end product application per the supplied table.

Overcurrent protection may be provided with external fusing or via Current Limiting, Class 2 Power Supply.

Supply wiring leads < 24 AWG shall not be spliced.

For additional product support, go to www.bannerengineering.com.

Supply Wiring (AWG)	Required Overcurrent Protection (A)	Supply Wiring (AWG)	Required Overcurrent Protection (A)
20	5.0	26	1.0
22	3.0	28	0.8
24	1.0	30	0.5

Certifications

Banner Engineering BV
Park Lane, Culliganlaan 2F bus 3
1831 Diegem, BELGIUM

© Banner Engineering Corp. All rights reserved.
www.bannerengineering.com

Dimensions

All measurements are listed in millimeters [inches], unless noted otherwise. The measurements provided are subject to change.

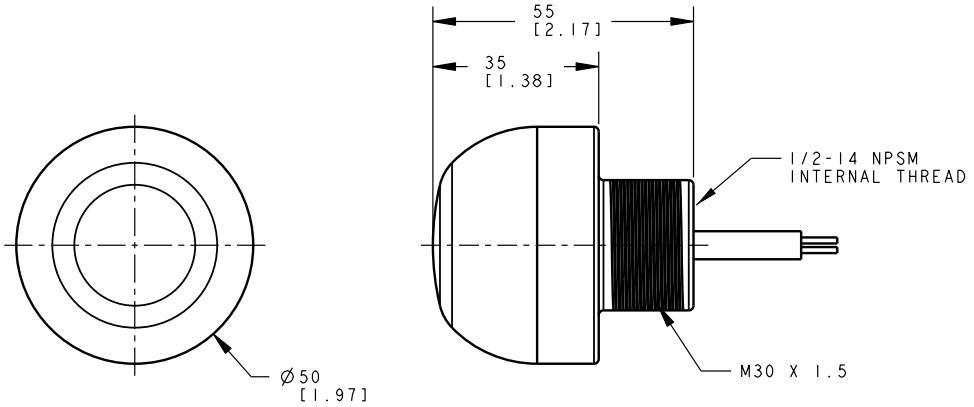

Accessories

Cordsets

8-Pin Single-Ended M12 Female Open-Shielded Cordsets				
Model	**Length**	**Style**	**Dimensions**	**Pinout (Female)**
MQDC2S-806	2.04 m (6.7 ft)	Straight	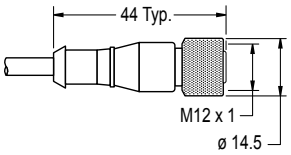	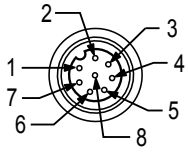 1 = White 2 = Brown 3 = Green 4 = Yellow 5 = Gray 6 = Pink 7 = Blue 8 = Red
MQDC2S-815	5.04 m (16.54 ft)			
MQDC2S-830	10.04 m (32.95 ft)			
MQDC2S-850	16 m (52.49 ft)			
MQDC2S-806RA	2 m (6.56 ft)	Right-Angle	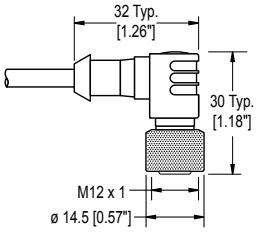	
MQDC2S-815RA	5 m (16.4 ft)			
MQDC2S-830RA	10 m (32.81 ft)			
MQDC2S-850RA	16 m (52.49 ft)			

8-Pin Single-Ended M12 Female Open-Shielded, Washdown, Stainless Steel Cordsets					
Model	**Length**	**Style**	**Dimensions**	**Pinout (Female)**	
MQDC-WDSS-0806	2 m (6.56 ft)	Straight	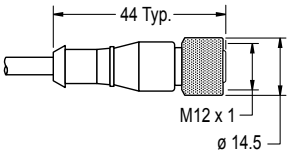	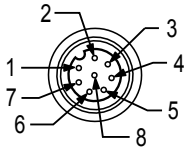	
MQDC-WDSS-0815	5 m (16.4 ft)				
MQDC-WDSS-0830	9 m (29.53 ft)			1 = White 2 = Brown 3 = Green 4 = Yellow	5 = Gray 6 = Pink 7 = Blue 8 = Red

© Banner Engineering Corp. All rights reserved.
www.bannerengineering.com

Brackets

SMB30A

- Right-angle bracket with curved slot for versatile orientation
- Clearance for M6 (¼ in) hardware
- Mounting hole for 30 mm sensor
- 12-gauge stainless steel

Hole center spacing: A to B=40
Hole size: A=ø 6.3, B= 27.1 × 6.3, C=ø 30.5

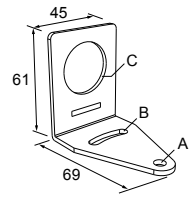

SMB30FA

- Swivel bracket with tilt and pan movement for precise adjustment
- Mounting hole for 30 mm sensor
- 12-gauge 304 stainless steel
- Easy sensor mounting to extrude rail T-slot
- Metric- and inch-size bolt available

Bolt thread: SMB30FA, A= 3/8 - 16 × 2 in; SMB30FAM10, A= M10 - 1.5 × 50
Hole size: B= ø 30.1

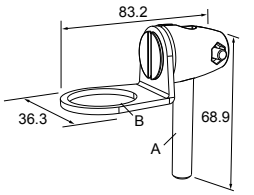

SMB30FVK

- V-clamp, flat bracket and fasteners for mounting to pipe or extensions
- Clamp accommodates 28 mm dia. tubing or 1 in. square extrusions
- 30 mm hole for mounting sensors

Hole size: A= ø 31

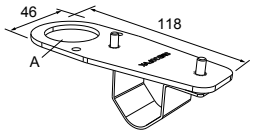

SMB30MM

- 12-gauge stainless steel bracket with curved mounting slots for versatile orientation
- Clearance for M6 (¼ in) hardware
- Mounting hole for 30 mm sensor

Hole center spacing: A = 51, A to B = 25.4
Hole size: A = 42.6 × 7, B = ø 6.4, C = ø 30.1

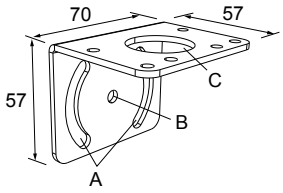

SMB30RAVK

- V-clamp, right-angle bracket and fasteners for mounting sensors to pipe or extrusion
- Clamp accommodates 28 mm dia. tubing or 1 in. square extrusions
- 30 mm hole for mounting sensors

Hole size: A = ø 30.5

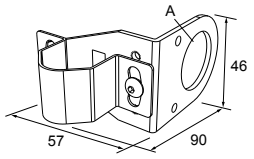

SMB30SC

- Swivel bracket with 30 mm mounting hole for sensor
- Black reinforced thermoplastic polyester
- Stainless steel mounting and swivel locking hardware included

Hole center spacing: A=ø 50.8
Hole size: A=ø 7.0, B=ø 30.0

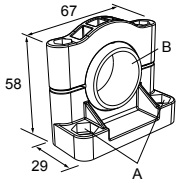

SMBAMS30P

- Flat SMBAMS series bracket
- 30 mm hole for mounting sensors
- Articulation slots for 90°+ rotation
- 12-gauge 300 series stainless steel

Hole center spacing: A=26.0, A to B=13.0
Hole size: A=26.8 × 7.0, B=ø 6.5, C=ø 31.0

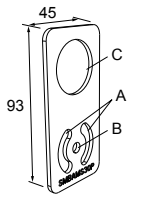

© Banner Engineering Corp. All rights reserved.
www.bannerengineering.com

SMBAMS30RA

- Right-angle SMBAMS series bracket
- 30 mm hole for mounting sensors
- Articulation slots for 90°+ rotation
- 12-gauge (2.6 mm) cold-rolled steel

Hole center spacing: A=26.0, A to B=13.0
Hole size: A=26.8 × 7.0, B=ø 6.5, C=ø 31.0

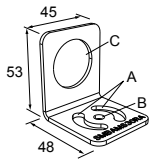

TC-K50-CL

- Touch cover

Diameter: A = 67 mm
Height: B = 42.5 mm

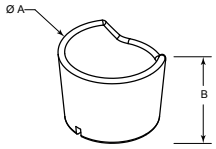

Banner Engineering Corp Limited Warranty

Banner Engineering Corp. warrants its products to be free from defects in material and workmanship for one year following the date of shipment. Banner Engineering Corp. will repair or replace, free of charge, any product of its manufacture which, at the time it is returned to the factory, is found to have been defective during the warranty period. This warranty does not cover damage or liability for misuse, abuse, or the improper application or installation of the Banner product.

THIS LIMITED WARRANTY IS EXCLUSIVE AND IN LIEU OF ALL OTHER WARRANTIES WHETHER EXPRESS OR IMPLIED (INCLUDING, WITHOUT LIMITATION, ANY WARRANTY OF MERCHANTABILITY OR FITNESS FOR A PARTICULAR PURPOSE), AND WHETHER ARISING UNDER COURSE OF PERFORMANCE, COURSE OF DEALING OR TRADE USAGE.

This Warranty is exclusive and limited to repair or, at the discretion of Banner Engineering Corp., replacement. **IN NO EVENT SHALL BANNER ENGINEERING CORP. BE LIABLE TO BUYER OR ANY OTHER PERSON OR ENTITY FOR ANY EXTRA COSTS, EXPENSES, LOSSES, LOSS OF PROFITS, OR ANY INCIDENTAL, CONSEQUENTIAL OR SPECIAL DAMAGES RESULTING FROM ANY PRODUCT DEFECT OR FROM THE USE OR INABILITY TO USE THE PRODUCT, WHETHER ARISING IN CONTRACT OR WARRANTY, STATUTE, TORT, STRICT LIABILITY, NEGLIGENCE, OR OTHERWISE.**

Banner Engineering Corp. reserves the right to change, modify or improve the design of the product without assuming any obligations or liabilities relating to any product previously manufactured by Banner Engineering Corp. Any misuse, abuse, or improper application or installation of this product or use of the product for personal protection applications when the product is identified as not intended for such purposes will void the product warranty. Any modifications to this product without prior express approval by Banner Engineering Corp will void the product warranties. All specifications published in this document are subject to change; Banner reserves the right to modify product specifications or update documentation at any time. Specifications and product information in English supersede that which is provided in any other language. For the most recent version of any documentation, refer to: www.bannerengineering.com.

For patent information, see www.bannerengineering.com/patents.

© Banner Engineering Corp. All rights reserved.
www.bannerengineering.com