D12DAB6 Series DIN Rail AC-coupled Fiber Optic Sensor

Features

Special-purpose glass and plastic fiber optic sensor for low-contrast applications

- Highly sensitive to very small signal changes; fast response
- Automatic gain control circuit continually adjusts the emitter output to maintain system gain
- Ideal for low contrast applications such as web flaw, thread break, and falling parts detection
- Sensors operate from 10 V DC to 30 V DC
- One NPN and one PNP output; 150 mA maximum (continuous) load
- LED indicators for power on, output conducting, and AGC lock conditions
- Selectable light- or dark-operate; no false pulse on power-up
- Models available for use with glass fibers or plastic fibers



WARNING:

- **Do not use this device for personnel protection**
- Using this device for personnel protection could result in serious injury or death.
- This device does not include the self-checking redundant circuitry necessary to allow its use in personnel safety applications. A device failure or malfunction can cause either an energized (on) or de-energized (off) output condition.

IMPORTANT:

- **Electrostatic discharge (ESD) sensitive device**
- ESD can damage the device. Damage from inappropriate handling is not covered by warranty.
- Use proper handling procedures to prevent ESD damage. Proper handling procedures include leaving devices in their anti-static packaging until ready for use; wearing anti-static wrist straps; and assembling units on a grounded, static-dissipative surface.

Models

Model	Fiber Optic	Output	Connection	Range
D12DAB6FV	Glass	One NPN and one PNP	2 m (6.5 ft) attached cable	Range varies by sensing mode and the fiber optics used
D12DAB6FVQ			150 mm (6-in) with M8 QD	
D12DAB6FP	Plastic		2 m (6.5 ft) attached cable	
D12DAB6FPQ			150 mm (6-in) with M8 QD	

The following models are no longer available for order but are still covered by the information in this document.

Model	Fiber Optic	Output	Connection	Range
D12DAB6FV W/30	Glass	One NPN and one PNP	9 m (30 ft) attached cable	Range varies by sensing mode and the fiber optics used
D12DAB6FP W/30	Plastic			

Original Instructions
03-Mar-26

© Banner Engineering Corp. All rights reserved.
www.bannerengineering.com

38384
p/n: 38384 Rev D

ПРОМЭЛЕКТРОНИКА/ sales@prom-elec.com

Overview

D12DAB6 Series sensors are compact, ac-coupled sensors designed for use with Banner glass or plastic fiber optics. They are intended for applications in which the light signal change is so small that sensitivity adjustment of ordinary DC-coupled sensors is difficult or impossible. D12DAB6 Series sensors can respond to even smaller signal changes than the standard D12 fiber optic sensors, and are less affected by gradual signal changes because of dirt buildup, etc. Typical applications include thread break detection, web flaw detection, and detection of small parts falling randomly from vibratory feeders or small presses.

Sensor Features (Top Panel Shown)

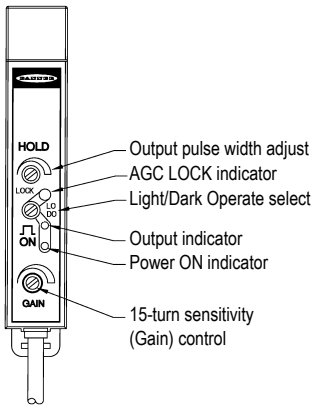

D12DAB6 Series sensors reliably amplify the small signal changes found in many low-contrast sensing applications. An automatic gain control (AGC) feedback system locks onto the light signal and continually adjusts the light intensity of the emitter so that the system is always maintained at the desired reference level regardless of the sensing range or the degree of environmental contamination. A multi-turn control enables setting of the amplifier sensitivity.

Model D12DAB6FV models are for use with Banner glass fiber optic assemblies. The D12DAB6FP plastic fiber models may be used with either the small diameter (0.508 mm or 0.020-inch) or large diameter (1.016 mm or 0.040-inch) Banner cut-to-length plastic fiber optics.

D12DAB6 Series sensors have a POWER ON indicator, a LOCK indicator that lights when the AGC circuit has locked onto the signal, and an output indicator that lights whenever the sensor's outputs are energized.

A switch on the sensor's top panel selects either light- or dark-operate. When light-operate is selected, output occurs on a dark-to-light transition. When dark-operate is selected, output occurs on a light-to-dark transition.

Installation

Installing Glass Fibers

1. Gently seat an o-ring onto each sensor end of the fiber.

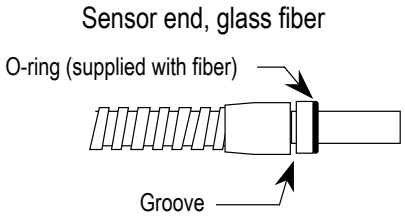

2. Slide the sensor ends into the fiber ports as far as they will go.
3. Push firmly on the fiber ends to compress the o-ring, and while holding the sensor ends snugly in place, slide the fiber retaining clip into the slot.
4. Press the retaining clip in until it snaps into the groove.

Installing Plastic Fibers in a D11 or D12 Sensor

Follow these steps to install plastic fibers.

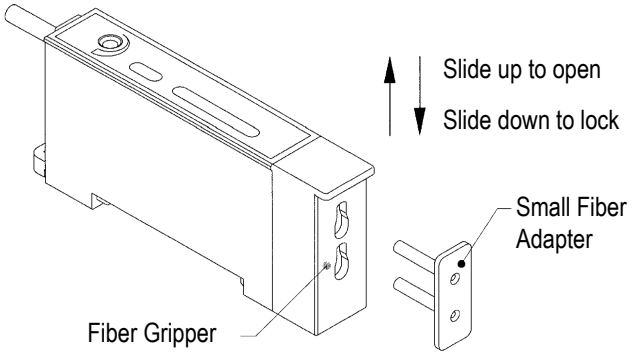

1. Cut the fiber ends according to the instructions included with the fibers.
2. Slide the fiber gripper up (open).

© Banner Engineering Corp. All rights reserved.
www.bannerengineering.com

3. If you are using 0.254 mm (0.01 in) or 0.508 mm (0.02 inch) diameter fibers: Insert the adaptor into the ports as far as it will go.
4. For all fiber diameters: Insert the prepared plastic fiber sensor ends gently into the ports as far as they will go.
5. Slide the fiber gripper back down to lock it.

Alignment

1. Attach two individual fiber optic assemblies (or one bifurcated fiber optic assembly) to the D12DAB6 Series sensor using the instructions packed with the fiber.
2. Mount and align the sensing end(s) of the fiber(s) at the sensing location in a position that will optimize the differential between the light and dark conditions.

   Do not connect the load at this time: the LOAD (amber) LED will simulate the action of the load.
3. Connect the brown and blue wires from the sensor to a +10 V DC to 30 V DC source (see wiring diagram).
4. Apply DC power and verify that the POWER ON LED (green) is on.
5. Set the LO/DO switch to DO (dark operate).
6. Present the light condition to the sensor.
7. Make sure that the LOCK LED (red) stays on. If necessary, adjust the fiber ends so that the red LOCK LED stays on reliably.

> **NOTE:** If the light condition is a quick transition that cannot be simulated as a static condition and the dark condition is the normal condition, set the LO/DO switch to LO (light operate). Adjust the fiber ends so that, when the light condition occurs, the amber LOAD indicator LED turns on reliably.

8. Simulate the sensing event to the sensor while observing the amber LOAD LED.
9. If necessary, adjust the GAIN control (clockwise to increase) so that the LOAD LED changes state positively and reliably to all desired variations of the sensing event.

   Note that too much gain may result in unwanted response to conditions such as vibration of the sensing ends, etc.
10. While observing the LOAD LED, adjust the output pulse length using the sensor's 3/4-turn HOLD control.

    Minimum on time is 1 millisecond; maximum on time is 70 milliseconds.
11. Connect the load to the sensor and check the system.

Wiring

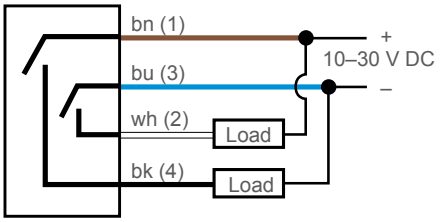

Key
1 = Brown
2 = White
3 = Blue
4 = Black

The sensor operates normally if the supply voltage polarity is reversed; however, the white and black wires must always be wired as shown.

Specifications

Sensing Beam
Visible red, 680 nm

Supply voltage
+10 V DC to 30 V DC at 60 mA max, exclusive of load

Supply Protection Circuitry
Protected against reverse polarity and transient overvoltages

Output configuration
One NPN (current sinking) and one PNP (current sourcing) open-collector transistor

Output rating
150 mA maximum each output
No false pulse on power-up. False pulse protection circuit causes a 0.1 second delay on power-up
Short-circuit protected
Off-state leakage current: < 10 microamps at 30 V DC
On-state saturation voltage: < 1 V at 10 mA DC; < 1.5 V at 150 mA DC
The total load may not exceed 150 mA
Output pulse: time adjustable, 1 to 70 milliseconds

Response time
50 microseconds on

Repeatability
15 microseconds

© Banner Engineering Corp. All rights reserved.
www.bannerengineering.com

Indicators

Three top-mounted LED indicators, one amber, one green, and one red

Green on: DC power on

Amber on: output conducting

Red on: whenever the AGC system is locked onto the signal

Adjustments (three top-panel controls)

Sensitivity control is a 15-turn slotted brass screw, clutched at both ends of adjustment

Light- or Dark-operate select switch

Output Pulse adjustment is a 3/4-turn potentiometer

Construction

Black ABS housing with acrylic cover

Acetal fiber clamping element

Stainless steel M3 × 0.5 hardware for use with the mounting bracket (supplied)

Environmental Rating

NEMA 4, IP66

Cable

2 m (6.5 ft) or 9 m (30 ft) attached PVC-covered cable, or 150 mm (6-in) with Pico-style 4-pin QD connector

Mounting bracket

D12 Series sensors mount directly to a standard DIN rail, or may be through-hole mounted using the supplied mounting bracket and M3 × 0.5 hardware. Bracket material is black PBT polyester.

Operating Conditions

–40 °C to +70 °C (–40 °F to +158 °F)

90% at +50 °C maximum relative humidity (non-condensing)

D12DAB6FV—Sensing modes and minimum guaranteed ranges (3-foot fibers)

Mode	Glass Fiber and Lens	Guaranteed Range (3-ft fibers)
Opposed	1.588 mm (1/16-in) fibers, no lenses	75 mm (3 in)
Opposed	1.588 mm (1/16-in) fibers, L9 lenses	> 150 cm (60 in)[1] [1]
Opposed	1.588 mm (1/16-in) fibers, L16F lenses	> 150 cm (60 in)[1]
Diffuse	1.588 mm (1/16-in) fibers, no lenses	25 mm (1 in); distance to 90% reflectance white test card
Opposed	3.175 mm (1/8-in) fibers, no lenses	20 cm (8 in)
Opposed	3.175 mm (1/8-in) fibers, L9 lenses	> 150 cm (60 in)[1]
Opposed	3.175 mm (1/8-in) fibers, L16F lenses	> 150 cm (60 in)[1]
Diffuse	3.175 mm (1/8-in) fibers, no lenses	60 mm (2.5 in); distance to 90% reflectance white test card

D12DAB6FP—Sensing modes and minimum guaranteed ranges (6-foot fibers)

Mode	Plastic Fiber and Lens	Guaranteed Range (6-ft fibers)
Opposed	0.508 mm (0.020-in) fibers, no lenses	13 mm (0.5 in)
Diffuse	0.508 mm (0.020-in) fibers, no lenses	5 mm (0.2 in); distance to 90% reflectance white test card
Opposed	1.016 mm (0.040-in) fibers, no lenses	76 mm (3 in)
Opposed	1.016 mm (0.040-in) fibers, L2 lenses	76 cm (30 in)
Opposed	1.016 mm (0.040-in) fibers, L08 lenses	> 3 m (10 ft)[2]
Diffuse	1.016 mm (0.040-in) fibers, no lenses	25 mm (1 in); distance to 90% reflectance white test card

[1] Exceeds maximum practical separation of sensing ends for a pair of 3-foot individual fibers.

[2] Exceeds maximum practical separation of sensing ends for a pair of 6-foot individual fibers.

Dimensions

All measurements are listed in millimeters [inches], unless noted otherwise. The measurements provided are subject to change.

© Banner Engineering Corp. All rights reserved.
www.bannerengineering.com

D12DAB6FV

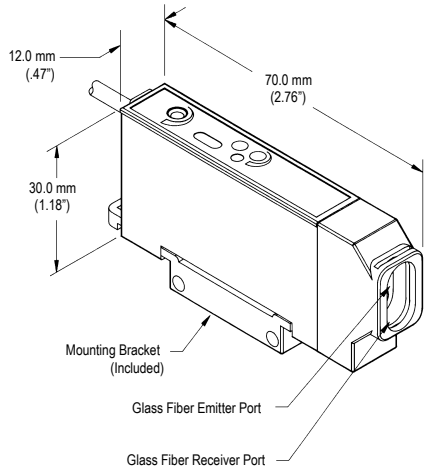

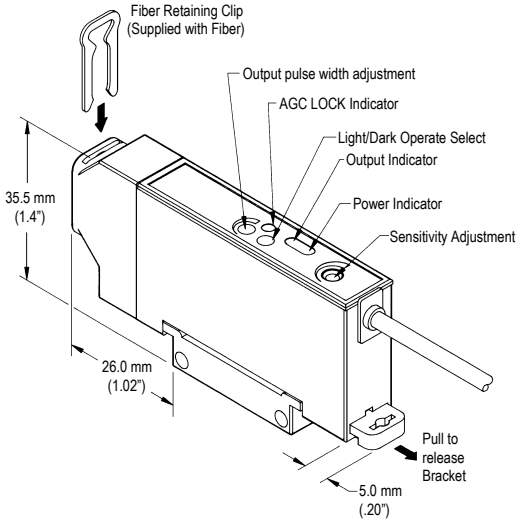

D12DAB6FP

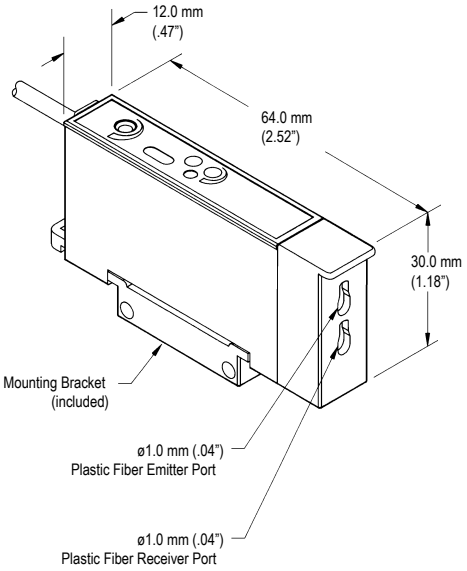

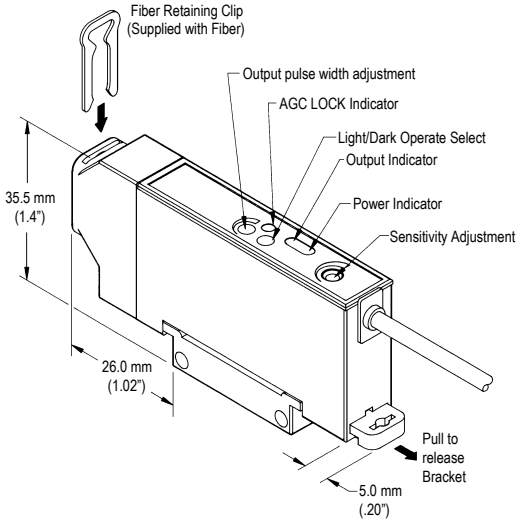

D12 Bracket Dimensions

D12 Sensors mount directly to a standard 35 mm DIN rail, or may be through-hole mounted using the supplied mounting bracket and stainless steel M3 × 0.5 hardware.

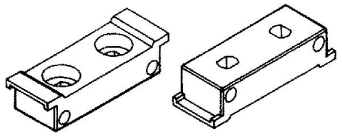

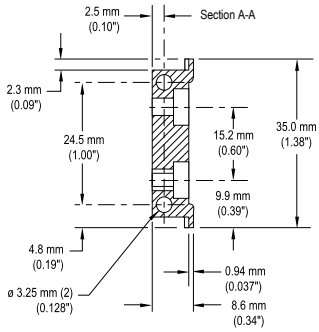

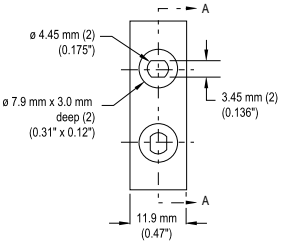

© Banner Engineering Corp. All rights reserved.
www.bannerengineering.com

Accessories

D12 models with a quick-disconnect require a mating cable.

4-Pin Single-Ended Snap-on M8 Female Cordsets					
Model	**Length**	**Style**	**Dimensions**	**Pinout (Female)**	
PKG4-2	2.03 m (6.66 ft)	Straight	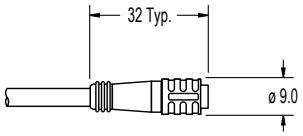	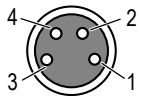	1 = Brown 2 = White 3 = Blue 4 = Black
PKW4Z-2	2 m (6.56 ft)	Right-Angle	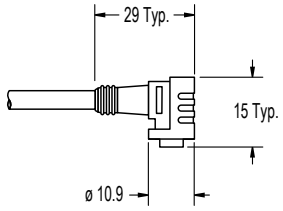	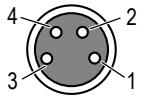	

Banner Engineering Corp Limited Warranty

Banner Engineering Corp. warrants its products to be free from defects in material and workmanship for one year following the date of shipment. Banner Engineering Corp. will repair or replace, free of charge, any product of its manufacture which, at the time it is returned to the factory, is found to have been defective during the warranty period. This warranty does not cover damage or liability for misuse, abuse, or the improper application or installation of the Banner product.

THIS LIMITED WARRANTY IS EXCLUSIVE AND IN LIEU OF ALL OTHER WARRANTIES WHETHER EXPRESS OR IMPLIED (INCLUDING, WITHOUT LIMITATION, ANY WARRANTY OF MERCHANTABILITY OR FITNESS FOR A PARTICULAR PURPOSE), AND WHETHER ARISING UNDER COURSE OF PERFORMANCE, COURSE OF DEALING OR TRADE USAGE.

This Warranty is exclusive and limited to repair or, at the discretion of Banner Engineering Corp., replacement. **IN NO EVENT SHALL BANNER ENGINEERING CORP. BE LIABLE TO BUYER OR ANY OTHER PERSON OR ENTITY FOR ANY EXTRA COSTS, EXPENSES, LOSSES, LOSS OF PROFITS, OR ANY INCIDENTAL, CONSEQUENTIAL OR SPECIAL DAMAGES RESULTING FROM ANY PRODUCT DEFECT OR FROM THE USE OR INABILITY TO USE THE PRODUCT, WHETHER ARISING IN CONTRACT OR WARRANTY, STATUTE, TORT, STRICT LIABILITY, NEGLIGENCE, OR OTHERWISE.**

Banner Engineering Corp. reserves the right to change, modify or improve the design of the product without assuming any obligations or liabilities relating to any product previously manufactured by Banner Engineering Corp. Any misuse, abuse, or improper application or installation of this product or use of the product for personal protection applications when the product is identified as not intended for such purposes will void the product warranty. Any modifications to this product without prior express approval by Banner Engineering Corp will void the product warranties. All specifications published in this document are subject to change; Banner reserves the right to modify product specifications or update documentation at any time. Specifications and product information in English supersede that which is provided in any other language. For the most recent version of any documentation, refer to: www.bannerengineering.com.

For patent information, see www.bannerengineering.com/patents.

© Banner Engineering Corp. All rights reserved.
www.bannerengineering.com