Features

Large Multicolor Indicator that Alternates Between Active Inputs



- Bright, uniform indicator light
- Alternates between colors when multiple inputs are active
- Models are available with up to five colors in one device
- Rugged IP67-rated design
- 12 V DC to 30 V DC operation

Model	Number of Colors	Colors	Input	Connection[1]
K90TLGRPQ	2	Green, Red	PNP	Integral 5-pin M12 male quick-disconnect connector
K90TLGYRPQ	3	Green, Red, Yellow		
K90TLBGYRPQ	4	Blue, Green, Yellow, Red		
K90TLWBGYRPQ	5	White, Blue, Green, Yellow, Red		Integral 8-pin M12 male quick-disconnect connector
K90TLGRNQ	2	Green, Red	NPN	Integral 5-pin M12 male quick-disconnect connector
K90TLGYRNQ	3	Green, Red, Yellow		
K90TLBGYRNQ	4	Blue, Green, Yellow, Red		
K90TLWBGYRNQ	5	White, Blue, Green, Yellow, Red		Integral 8-pin M12 male quick-disconnect connector

Wiring

When multiple inputs are on at the same time, the indicator cycles between colors at a rate of 1 Hz.

5-Pin PNP Input

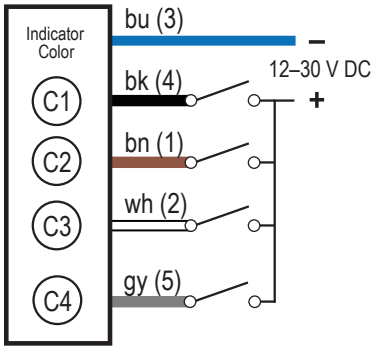

5-Pin NPN Input

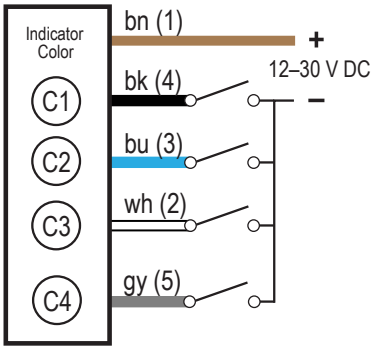

Key

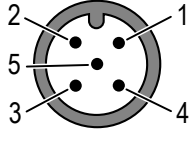

1 = Brown
2 = White
3 = Blue
4 = Black
5 = Gray

[1] Integral quick-disconnect connector models are listed.
- To order the 150 mm (6 in) PVC cable model with an M12 quick-disconnect connector, replace the suffix "Q" with "QP" in the model number. For example, K90TLGRQP.
- To order the 2 m (6.5 ft) PVC cable model, omit the suffix "Q" in the model number. For example, K90TLGR.

Original Instructions
26-Feb-26

© Banner Engineering Corp. All rights reserved.
www.bannerengineering.com

181766
p/n: 181766 Rev. E

ПРОМЭЛЕКТРОНИКА/ sales@prom-elec.com

8-Pin PNP Input

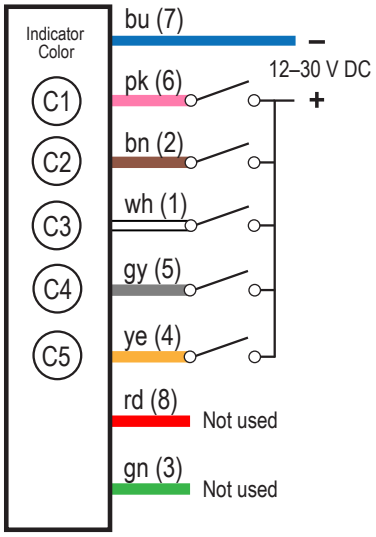

8-Pin NPN Input

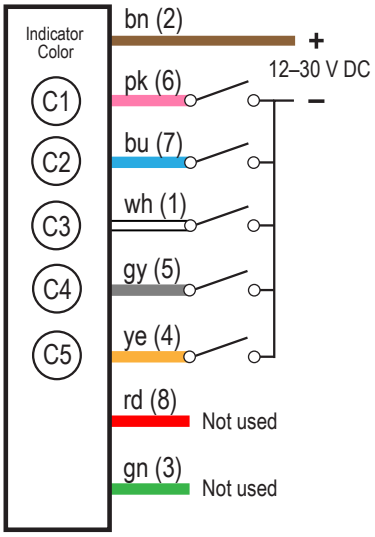

Key

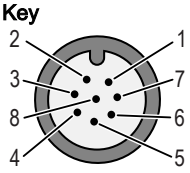

1= White
2 = Brown
3 = Green
4 = Yellow
5 = Gray
6 = Pink
7 = Blue
8 = Red

The red and green wires are not used.

Specifications

Supply Voltage and Current

12 V DC to 30 V DC

475 mA maximum at 12 V DC

175 mA maximum at 30 V DC

Supply Protection Circuitry

Protected against reverse polarity and transient voltages

Input Response Time

150 ms maximum

Indicators

2 to 5 colors, depending on model

Indicator Characteristics

Color	Typical Wavelength or Color Temperature	Typical Intensity
Red	625 nm	65 lumens
Yellow	590 nm	35 lumens
Green	525 nm	150 lumens
Blue	470 nm	55 lumens
White	6000K to 7100K	200 lumens

Construction

Base and dome: Polycarbonate

Connections

Integral 5-pin M12 male quick-disconnect connector; Integral 8-pin M12 male quick-disconnect connector; 150 mm (6 in) PVC-jacketed cable with a 5-pin M12 male quick-disconnect connector; 150 mm (6 in) PVC-jacketed cable with an 8-pin M12 male quick-disconnect connector; or 2 m (6.5 ft) unterminated PVC-jacketed cable, depending on model

Environmental Rating

IP67, Enclosure UL Type 4X, 13

Vibration and Mechanical Shock

All models meet MIL-STD-202F, Method 201A (Vibration: 10 Hz to 60 Hz maximum, 0.06 inch (1.52 mm) double amplitude, 10G maximum acceleration) requirements. Also meets IEC 60947-5-2 (Shock: 30G 11 ms duration, half sine wave) requirements.

Operating Conditions

–40 °C to +50 °C (–40 °F to +122 °F)

Required Overcurrent Protection

WARNING: Electrical connections must be made by qualified personnel in accordance with local and national electrical codes and regulations.

Overcurrent protection is required to be provided by end product application per the supplied table.

Overcurrent protection may be provided with external fusing or via Current Limiting, Class 2 Power Supply.

Supply wiring leads < 24 AWG shall not be spliced.

For additional product support, go to www.bannerengineering.com.

Supply Wiring (AWG)	Required Overcurrent Protection (A)	Supply Wiring (AWG)	Required Overcurrent Protection (A)
20	5.0	26	1.0
22	3.0	28	0.8
24	2.0	30	0.5

Certifications

Banner Engineering BV
Park Lane, Culliganlaan 2F bus 3
1831 Diegem, BELGIUM

© Banner Engineering Corp. All rights reserved.
www.bannerengineering.com

Dimensions

All measurements are listed in millimeters [inches], unless noted otherwise. The measurements provided are subject to change.

Models with Quick-Disconnect Connector

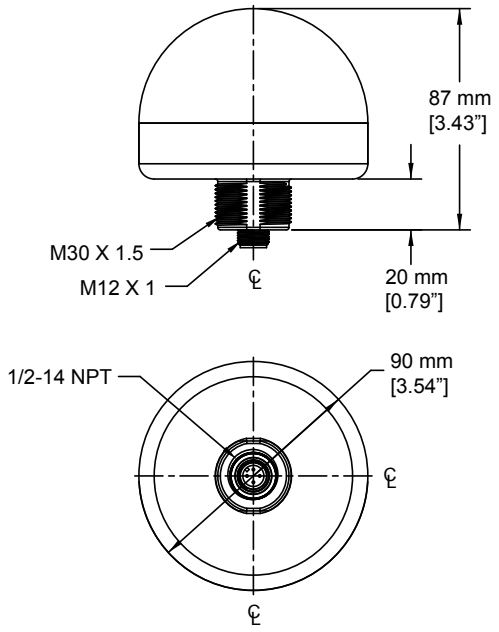

Models with Integral Cable

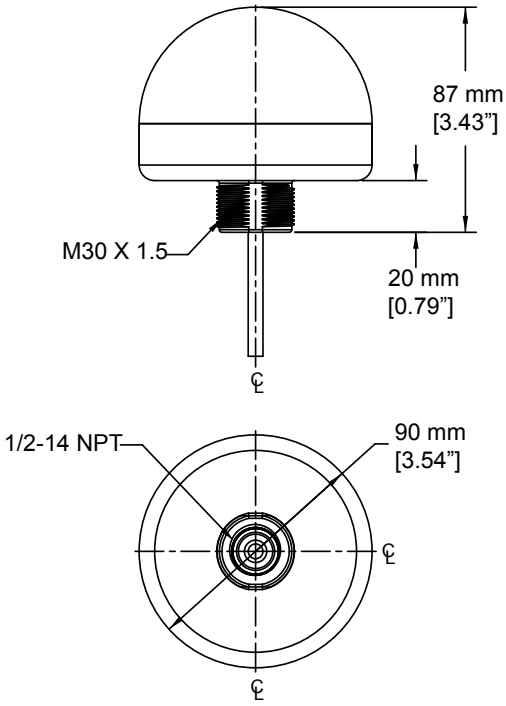

Accessories

Cordsets

5-Pin Single-Ended M12 Female Cordsets				
Model	**Length**	**Style**	**Dimensions**	**Pinout (Female)**
MQDC1-501.5	0.5 m (1.5 ft)	Straight	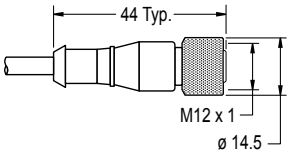	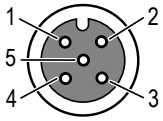 1 = Brown 2 = White 3 = Blue 4 = Black 5 = Gray
MQDC1-503	0.9 m (2.9 ft)			
MQDC1-506	2 m (6.5 ft)			
MQDC1-515	5 m (16.4 ft)			
MQDC1-530	9 m (29.5 ft)			
MQDC1-560	18 m (59 ft)			
MQDC1-5100	31 m (101.7 ft)			
MQDC1-506RA	2 m (6.5 ft)	Right-Angle	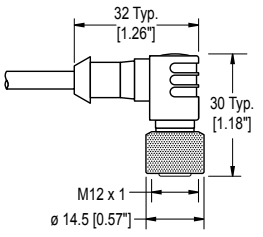	
MQDC1-515RA	5 m (16.4 ft)			
MQDC1-530RA	9 m (29.5 ft)			
MQDC1-560RA	19 m (62.3 ft)			

© Banner Engineering Corp. All rights reserved.
www.bannerengineering.com

8-Pin Single-Ended M12 Female Open-Shielded Cordsets				
Model	**Length**	**Style**	**Dimensions**	**Pinout (Female)**
MQDC2S-806	2.04 m (6.7 ft)	Straight	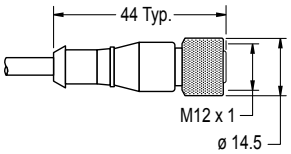	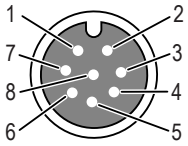 1 = White 2 = Brown 3 = Green 4 = Yellow 5 = Gray 6 = Pink 7 = Blue 8 = Red
MQDC2S-815	5.04 m (16.54 ft)			
MQDC2S-830	10.04 m (32.95 ft)			
MQDC2S-850	16 m (52.49 ft)			
MQDC2S-806RA	2 m (6.56 ft)	Right-Angle	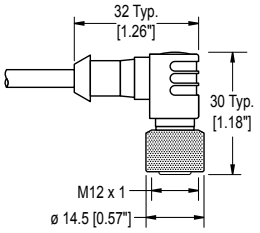	
MQDC2S-815RA	5 m (16.4 ft)			
MQDC2S-830RA	10 m (32.81 ft)			
MQDC2S-850RA	16 m (52.49 ft)			

Elevated Mount System

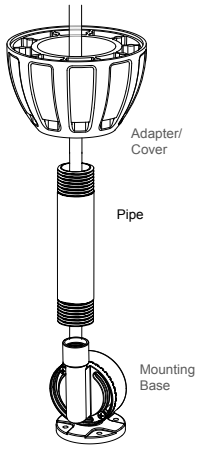

Adapter/Cover Model	Description	
SA-M30 - Black polycarbonate	• Streamlined black PC or Gray PC thread cover • Covers the outer M30 threads on the light's base • Typically used for the TL70 Tower Light and K90 series • Mounting hardware included • CAD files: DXF, PDF, IGS, STP	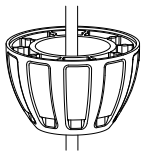
SA-M30C - Gray polycarbonate		

Black Anodized Aluminum, ½ in. NPT Pipe Models	Clear Anodized Aluminum, ½ in. NPT Pipe Models	Description
SOP-E12-150A, 150 mm (6 in) long	**SOP-E12-150AC**, 150 mm (6 in) long	• Elevated-use stand-off pipe • Threaded at both ends • Compatible with most industrial environments • CAD Files: ◦ **SOP-E12-150A**: DXF, PDF, IGS, STP ◦ **SOP-E12-300A**: DXF, PDF, IGS, STP ◦ **SOP-E12-600A**: DXF, PDF, IGS, STP ◦ **SOP-E12-900A**: DXF, PDF, IGS, STP
SOP-E12-300A, 300 mm (12 in) long	**SOP-E12-300AC**, 300 mm (12 in) long	
SOP-E12-600A, 600 mm (24 in) long	-	
SOP-E12-900A, 900 mm (36 in) long	**SOP-E12-900AC**, 900 mm (36 in) long	

Mounting Base Model	Description	
SA-FFB12 - Black polycarbonate	• For use with ½ in. stand-off pipes • 110° rotation • Stainless steel hardware • CAD files: DXF, PDF, IGS, STP	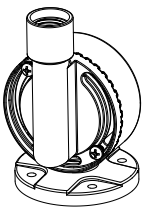
SA-FFB12C - Gray polycarbonate		

Other Pipes

304 Stainless Steel, ½ in. NPT Pipe Models	Description
SOP-E12-150SS, 150 mm (6 in) long	• Elevated-use stand-off pipe • Threaded at both ends • Compatible with most industrial environments • CAD Files: ◦ **SOP-E12-150x**: DXF, PDF, IGS, STP ◦ **SOP-E12-300x**: DXF, PDF, IGS, STP ◦ **SOP-E12-600x**: DXF, PDF, IGS, STP ◦ **SOP-E12-900x**: DXF, PDF, IGS, STP
SOP-E12-300SS, 300 mm (12 in) long	
SOP-E12-600SS, 600 mm (24 in) long	
SOP-E12-900SS, 900 mm (36 in) long	

Other Mounting Bases

© Banner Engineering Corp. All rights reserved.
www.bannerengineering.com

Mounting Base Model	Description	
SA-E12M30 - Black acetal **SA-E12M30C** - White UHMW	• Streamlined black acetal or white UHMW mounting base adapter/ cover • Adapter from ½ in. NPSM/DN15 pipe to 30 mm (1-3/16 in) drilled hole • Mounting hardware included • CAD files: DXF, PDF, IGS, STP	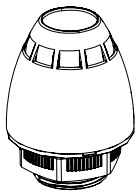

Mounting Base Model	Description	
SA-F12	• Die-cast zinc base with black paint • Elevated-use stand-off pipes (½ in, NPSM/DN15) • M5 mounting hardware and nitrile gasket included • CAD files: DXF, PDF, IGS, STP	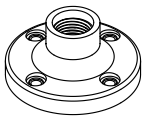

LMB Sealed Right-Angle Bracket

Model	Description	
LMB30RA - Black polycarbonate CAD Files: DXF, PDF, IGS, STP **LMB30RAC** - Gray polycarbonate CAD Files: DXF, PDF, IGS, STP	• **Direct-Mount Models** • Bracket kit with base, 30 mm adapter, set screw, fasteners, O-rings, and gaskets.	
LMBE12RA - Black polycarbonate CAD Files: DXF, PDF, IGS, STP **LMBE12RAC** - Gray polycarbonate CAD Files: DXF, PDF, IGS, STP	• **Pipe-Mount Models** • Bracket kit with base, ½-14 pipe adapter, set screw, fasteners, O-rings, and gaskets • For use with stand-off pipe (listed and sold separately)	

Sun Shield

K90DS • Use for enhanced visibility in direct sunlight conditions • Polycarbonate	

Banner Engineering Corp Limited Warranty

Banner Engineering Corp. warrants its products to be free from defects in material and workmanship for one year following the date of shipment. Banner Engineering Corp. will repair or replace, free of charge, any product of its manufacture which, at the time it is returned to the factory, is found to have been defective during the warranty period. This warranty does not cover damage or liability for misuse, abuse, or the improper application or installation of the Banner product.

THIS LIMITED WARRANTY IS EXCLUSIVE AND IN LIEU OF ALL OTHER WARRANTIES WHETHER EXPRESS OR IMPLIED (INCLUDING, WITHOUT LIMITATION, ANY WARRANTY OF MERCHANTABILITY OR FITNESS FOR A PARTICULAR PURPOSE), AND WHETHER ARISING UNDER COURSE OF PERFORMANCE, COURSE OF DEALING OR TRADE USAGE.

This Warranty is exclusive and limited to repair or, at the discretion of Banner Engineering Corp., replacement. **IN NO EVENT SHALL BANNER ENGINEERING CORP. BE LIABLE TO BUYER OR ANY OTHER PERSON OR ENTITY FOR ANY EXTRA COSTS, EXPENSES, LOSSES, LOSS OF PROFITS, OR ANY INCIDENTAL, CONSEQUENTIAL OR SPECIAL DAMAGES RESULTING FROM ANY PRODUCT DEFECT OR FROM THE USE OR INABILITY TO USE THE PRODUCT, WHETHER ARISING IN CONTRACT OR WARRANTY, STATUTE, TORT, STRICT LIABILITY, NEGLIGENCE, OR OTHERWISE.**

Banner Engineering Corp. reserves the right to change, modify or improve the design of the product without assuming any obligations or liabilities relating to any product previously manufactured by Banner Engineering Corp. Any misuse, abuse, or improper application or installation of this product or use of the product for personal protection applications when the product is identified as not intended for such purposes will void the product warranty. Any modifications to this product without prior express approval by Banner Engineering Corp will void the product warranties. All specifications published in this document are subject to change; Banner reserves the right to modify product specifications or update documentation at any time. Specifications and product information in English supersede that which is provided in any other language. For the most recent version of any documentation, refer to: www.bannerengineering.com.

For patent information, see www.bannerengineering.com/patents.

© Banner Engineering Corp. All rights reserved.
www.bannerengineering.com