BANNER®

the machine safety specialist

EZA-MBK-21

EZ-SCREEN™ Mounting Bracket for Mounting 2 Light Screens at Right Angles



Description

- Facilitates mounting of two EZ-SCREEN Cascade sensors
- Allows for 0° to 30° or 0° to 45° inclined installations
- Flexible L-mounting configuration
- Advantageous cable routing
- Minimal encroachment into working area
- Minimizes gaps in sensing fields
- Four mounting variations are possible
- Minimizes reach-around hazards
- One EZA-MBK-21 kit contains brackets for one side of an L-mounting configuration

Dimensions

Bracket 1

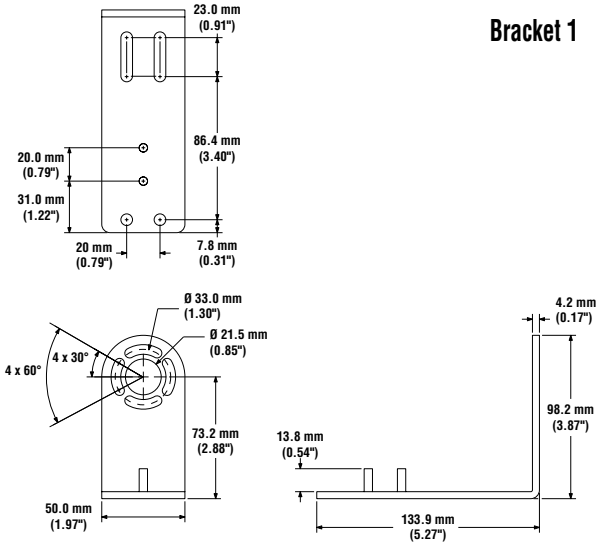

Bracket 2

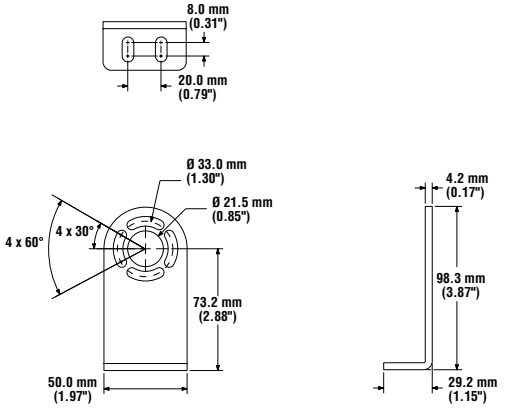

Bracket 3

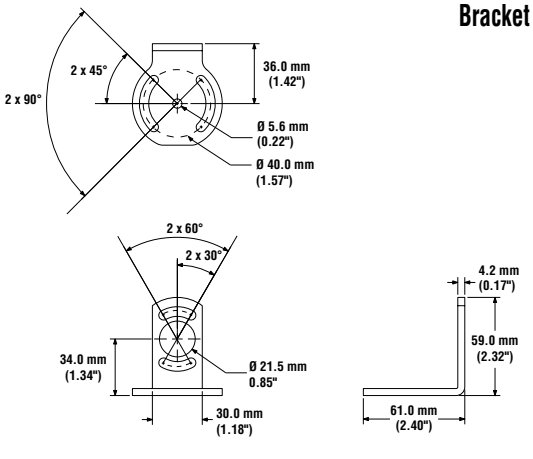

Bracket 4

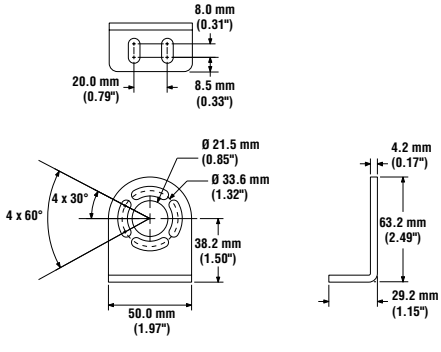

ПРОМЭЛЕКТРОНИКА/ sales@prom-elec.com

EZA-MBK-21 – EZ-SCREEN™ Mounting Bracket

Figure 1. Machine Interface Cable oriented horizontally (0° to ±30°)

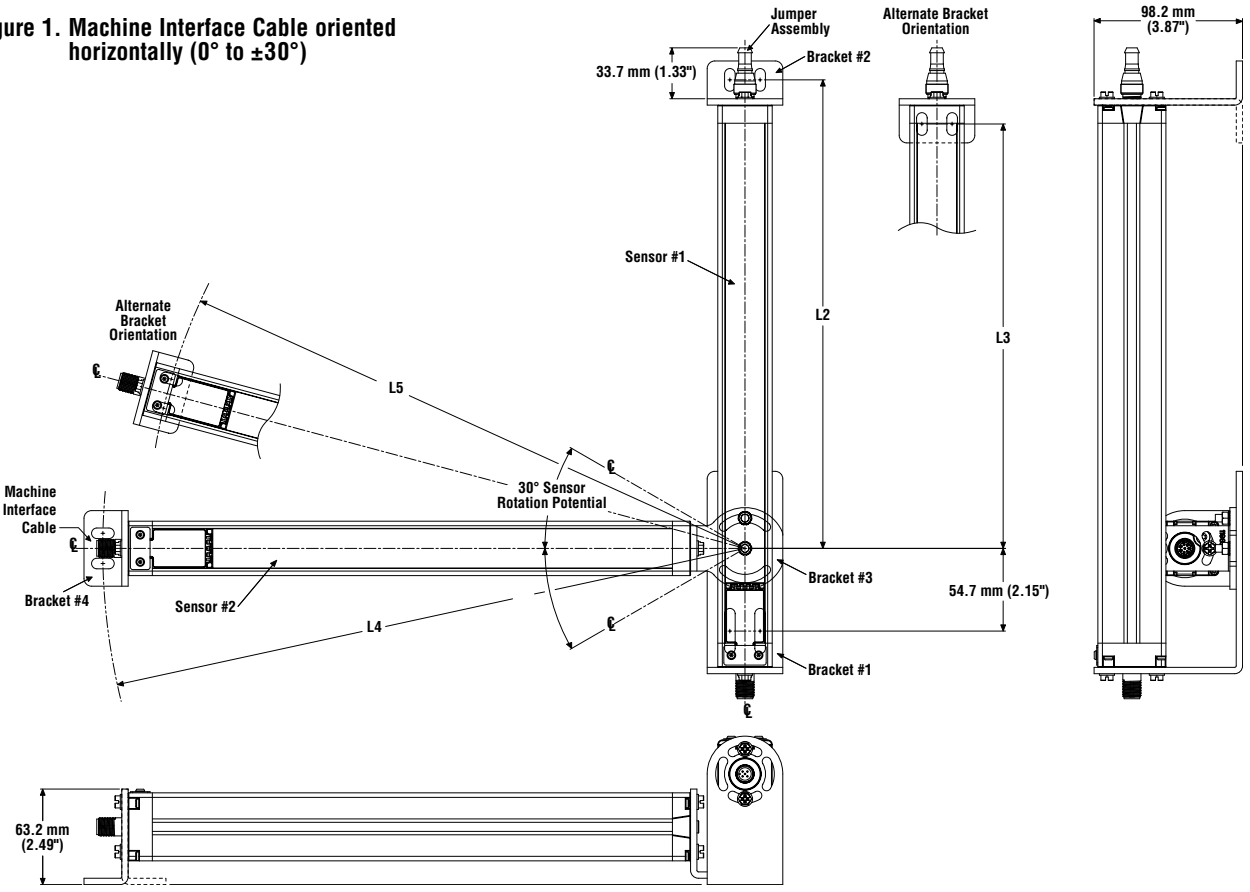

Light Screen Model	Sensor Housing Length L1	Sensor #1		Sensor #2	
		Mounting Dimension L2	Mounting Dimension L3	Mounting Dimension L4	Mounting Dimension L5
SLSC..-300	372 mm (14.6")	310 mm (12.2")	280.8 mm (11.1")	424.7 mm (16.7")	395.5 mm (15.6")
SLSC..-450	522 mm (20.6")	460 mm (18.1")	430.8 mm (17.0")	574.7 mm (22.6")	545.5 mm (21.5")
SLSC..-600	671 mm (26.4")	609 mm (24.0")	579.8 mm (22.8")	723.7 mm (28.5")	694.5 mm (27.3")
SLSC..-750	821 mm (32.3")	759 mm (29.9")	729.8 mm (28.7")	873.7 mm (34.4")	844.5 mm (33.2")
SLSC..-900	971 mm (38.2")	909 mm (35.8")	879.8 mm (34.6")	1023.7 mm (40.3")	994.5 mm (39.2")
SLSC..-1050	1120 mm (44.1")	1058 mm (41.7")	1028.8 mm (40.5")	1172.7 mm (46.2")	1143.5 mm (45.0")
SLSC..-1200	1270 mm (50.0")	1208 mm (47.6")	1178.8 mm (46.4")	1322.7 mm (52.1")	1293.5 mm (50.9")
SLSC..-1350	1420 mm (55.9")	1358 mm (53.5")	1328.8 mm (52.3")	1472.7 mm (58.0")	1443.5 mm (56.8")
SLSC..-1500	1569 mm (61.8")	1507 mm (59.3")	1477.8 mm (58.2")	1621.7 mm (63.8")	1592.5 mm (62.7")
SLSC..-1650	1719 mm (67.7")	1657 mm (65.2")	1627.8 mm (64.1")	1771.7 mm (69.8")	1742.5 mm (68.6")
SLSC..-1800	1869 mm (74.9")	1807 mm (71.1")	1777.8 mm (70.0")	1921.7 mm (75.7")	1892.5 mm (74.5")

Figure 2. Machine Interface Cable oriented vertically (0° to ±30°)

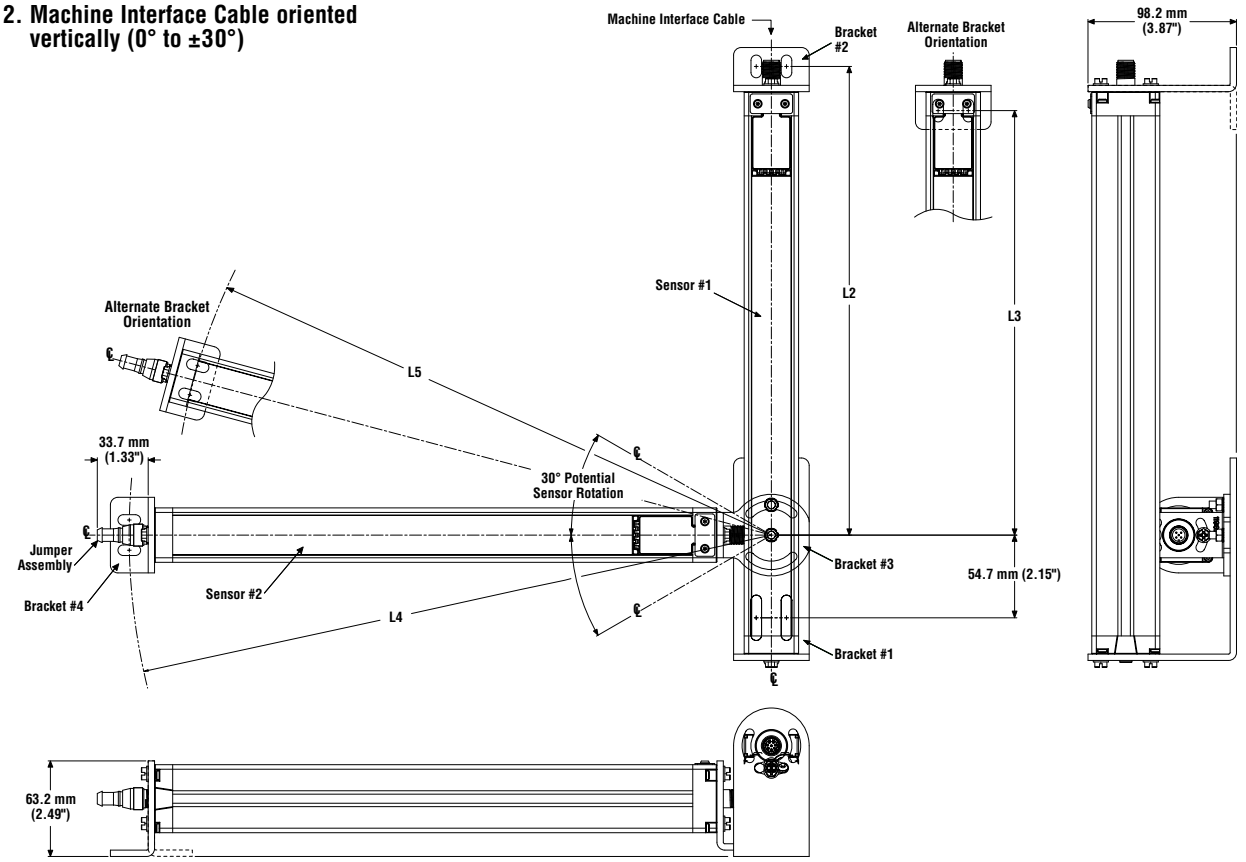

Light Screen Model	Sensor Housing Length L1	Sensor #1		Sensor #2	
		Mounting Dimension L2	Mounting Dimension L3	Mounting Dimension L4	Mounting Dimension L5
SLSC..-300	372 mm (14.6")	310 mm (12.2")	280.8 mm (11.1")	424.7 mm (16.7")	395.5 mm (15.6")
SLSC..-450	522 mm (20.6")	460 mm (18.1")	430.8 mm (17.0")	574.7 mm (22.6")	545.5 mm (21.5")
SLSC..-600	671 mm (26.4")	609 mm (24.0")	579.8 mm (22.8")	723.7 mm (28.5")	694.5 mm (27.3")
SLSC..-750	821 mm (32.3")	759 mm (29.9")	729.8 mm (28.7")	873.7 mm (34.4")	844.5 mm (33.2")
SLSC..-900	971 mm (38.2")	909 mm (35.8")	879.8 mm (34.8")	1023.7 mm (40.3")	994.5 mm (39.2")
SLSC..-1050	1120 mm (44.1")	1058 mm (41.7")	1028.8 mm (40.5")	1172.7 mm (46.2")	1143.5 mm (45.0")
SLSC..-1200	1270 mm (50.0")	1208 mm (47.6")	1178.8 mm (46.4")	1322.7 mm (52.1")	1293.5 mm (50.9")
SLSC..-1350	1420 mm (55.9")	1358 mm (53.5")	1328.8 mm (52.3")	1472.7 mm (58.0")	1443.5 mm (56.8")
SLSC..-1500	1569 mm (61.8")	1507 mm (59.3")	1477.8 mm (58.2")	1621.7 mm (63.8")	1592.5 mm (62.7")
SLSC..-1650	1719 mm (67.7")	1657 mm (65.2")	1627.8 mm (64.1")	1771.7 mm (69.8")	1742.5 mm (68.6")
SLSC..-1800	1869 mm (74.9")	1807 mm (71.1")	1777.8 mm (70.0")	1921.7 mm (75.7")	1892.5 mm (74.5")

EZA-MBK-21 – EZ-SCREEN™ Mounting Bracket

Figure 3. Inverted Bracket #1 with Machine Interface Cable oriented horizontally (0° to ±45°)

NOTE: Machine Interface Cable oriented vertically not shown, see Figure 2.

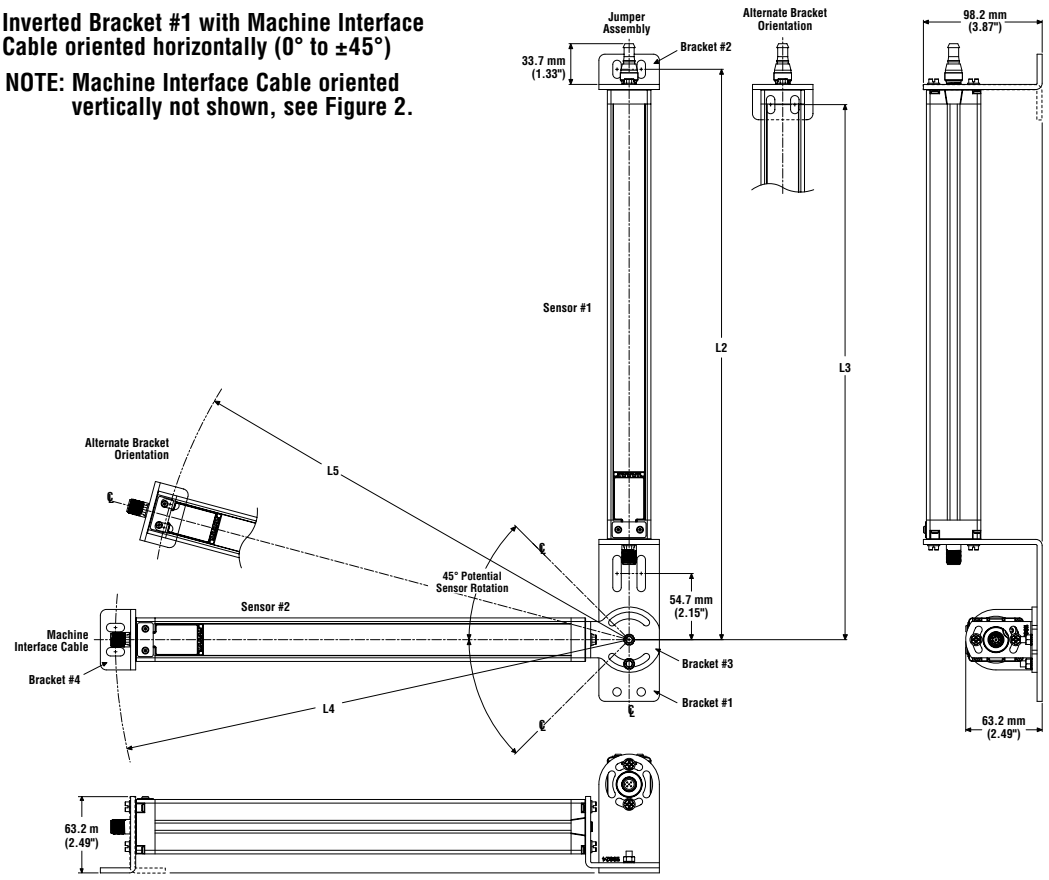

Light Screen Model	Sensor Housing Length L1	Sensor #1		Sensor #2	
		Mounting Dimension L2	Mounting Dimension L3	Mounting Dimension L4	Mounting Dimension L5
SLSC..-300	372 mm (14.6")	476.1 mm (18.6")	442.4 mm (17.4")	424.7 mm (16.7")	395.5 mm (15.6")
SLSC..-450	522 mm (20.6")	621.6 mm (24.5")	592.4 mm (23.3")	574.7 mm (22.6")	545.5 mm (21.5")
SLSC..-600	671 mm (26.4")	770.6 mm (30.3")	741.4 mm (29.2")	723.7 mm (28.5")	694.5 mm (27.3")
SLSC..-750	821 mm (32.3")	920.6 mm (36.2")	891.4 mm (35.1")	873.7 mm (34.4")	844.5 mm (33.2")
SLSC..-900	971 mm (38.2")	1070.6 mm (42.1")	1041.4 mm (41.0")	1023.7 mm (40.3")	994.5 mm (39.2")
SLSC..-1050	1120 mm (44.1")	1219.6 mm (48.0")	1190.4 mm (46.9")	1172.7 mm (46.2")	1143.5 mm (45.0")
SLSC..-1200	1270 mm (50.0")	1369.6 mm (53.9")	1340.4 mm (52.8")	1322.7 mm (52.1")	1293.5 mm (50.9")
SLSC..-1350	1420 mm (55.9")	1519.6 mm (59.8")	1490.4 mm (58.7")	1472.7 mm (58.0")	1443.5 mm (56.8")
SLSC..-1500	1569 mm (61.8")	1668.6 mm (65.7")	1639.4 mm (64.5")	1621.7 mm (63.8")	1592.5 mm (62.7")
SLSC..-1650	1719 mm (67.7")	1818.6 mm (71.6")	1789.4 mm (70.4")	1771.7 mm (69.8")	1742.5 mm (68.6")
SLSC..-1800	1869 mm (74.9")	1968.6 mm (77.5")	1939.4 mm (76.4")	1921.7 mm (75.7")	1892.5 mm (74.5")

BANNER®

the machine safety specialist

WARRANTY: Banner Engineering Corp. warrants its products to be free from defects for one year. Banner Engineering Corp. will repair or replace, free of charge, any product of its manufacture found to be defective at the time it is returned to the factory during the warranty period. This warranty does not cover damage or liability for the improper application of Banner products. This warranty is in lieu of any other warranty either expressed or implied.

P/N 121007

Banner Engineering Corp., 9714 Tenth Ave. No., Minneapolis, MN USA 55441 • Phone: 763.544.3164 • www.bannerengineering.com • Email: sensors@bannerengineering.com