Q45BL Wireless Button with Light

Q45BL-xx Features

Sure Cross® Wireless Q45 Sensors combine the best of Banner's flexible Q45 sensor family with its reliable, field-proven, Sure Cross wireless architecture to solve new classes of applications limited only by the user's imagination. Containing a variety of sensor models, a radio, and an internal battery supply, this product line is truly plug-and-play.

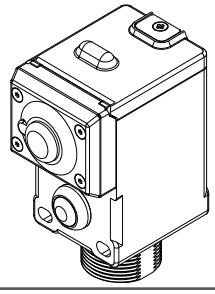

The Wireless Q45BL with Button and Light is a wireless Node with an independently controlled push button input and a two-color LED indicator light.

The push button can be configured with DIP switches for either toggle or momentary operation; the LED indicator lights outputs can be configured for solid or flashing operation.

Q45BL-xx Models

Model	ISM Radio Frequency	Discrete OUT 1	Discrete OUT 2
DX80N2Q45BL-RG	2.4 GHz ISM Band	Red	Green
DX80N2Q45BL-RY		Red	Yellow
DX80N2Q45BL-YG		Yellow	Green

Storage Mode

While in **storage mode**, the device's radio does not operate to conserve the battery. To put any device into storage mode, press and hold the binding button for five seconds. The device is in storage mode when the LEDs stop blinking. To wake the device, press and hold the binding button (inside the housing on the radio board) for five seconds.

Configuration Instructions

Buttons, LEDs, and DIP Switches (Q45BL-xx)

1. Button
2. Green LED (flashing) indicates a good radio link with the Gateway.
3. Red LED (flashing) indicates a radio link error with the Gateway.
4. Amber LED indicates when input 1 is active. The LED is active at power up and disabled after 15 minutes to conserve power. To enable the LED for another 15 minutes, press the button once. To disable the LED, press the button 5 times.
5. DIP Switches

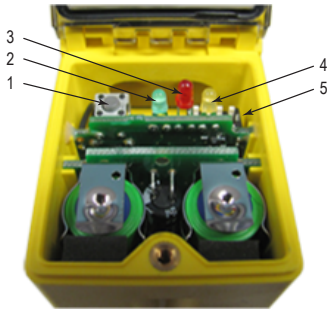

After making changes to any DIP switch position, reboot the Wireless Q45 Sensor by triple-clicking the button, waiting a second, then double-clicking the button. You may also reboot the device by removing the battery pack, then re-installing it.

As shown in the image above, the DIP switches are in the OFF position. To turn a DIP switch on, push the switch toward the battery pack. DIP switches one through four are numbered from left to right as shown.

Description	DIP Switches			
	1	2	3	4
Reserved (keep in the OFF position) (default)	OFF			
Button mode: toggle (default)		OFF		
Button mode: monentary		ON		
Reserved (keep in the OFF position) (default)			OFF	
Light mode: flash (recommended to conserve the battery) (default) [1]				OFF
Light mode: solid				ON

[1] The light consumes most of the sensor's power. If the light remains off most of the time, the batteries will last much longer.

© Banner Engineering Corp.

ПРОМЭЛЕКТРОНИКА/ sales@prom-elec.com

Apply Power to the Q45 AA-Cell Models

Follow these instructions to install or replace the lithium "AA" cell batteries.

CAUTION:

- **As with all batteries, these are fire, explosion, and severe burn hazards. There is a risk of explosion if the battery is replaced incorrectly.**
- Do not burn or expose them to high temperatures. Do not recharge, crush, disassemble, or expose the contents to water.
- Verify the battery's positive and negative terminals align to the positive and negative terminals of the battery holder mounted within the case.
- Properly dispose of used batteries according to local regulations by taking them to a hazardous waste collection site, an e-waste disposal center, or another facility qualified to accept lithium batteries.

1. Loosen the clamp plate with a small Phillips screwdriver and lift the cover.
2. Slide the battery board out of the Q45 housing.
3. If applicable, remove the discharged batteries.
4. Install the new batteries.
   Use Banner's **BWA-BATT-006** replacement batteries or equivalent 3.6 V AA lithium batteries, such as Xeno's XL-60F.
5. Verify the battery's positive and negative terminals align to the positive and negative terminals of the battery holder mounted within the case.
6. Slide the board containing the new batteries back into the Q45 housing.
7. Close the cover and gently tighten the clamp plate with the small Phillips screwdriver.

Q45 battery board

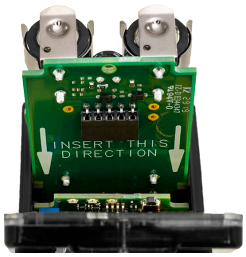

Bind to the Gateway and Assign the Node Address

Before beginning the binding procedure, apply power to all the devices. Separate the devices by two meters when running the binding procedure. Put only one Gateway into binding at a time to prevent binding to the wrong Gateway.

1. On the Gateway: Enter binding mode.
   - For housed DX80 Gateways, triple-click button 2 on the Gateway. Both LEDs flash red.
   - For Gateway board modules, triple-click the button. The green and red LED flashes.
2. Assign the Q45 a Node address using the Gateway's rotary dials. Use the left rotary dial for the left digit and the right rotary dial for the right digit. For example, to assign your Q45 to Node 10, set the Gateway's left dial to 1 and the right dial to 0. Valid Node addresses are 01 through 47.
3. On the Q45: Loosen the clamp plate on the top of the Q45 and lift the cover.
4. Enter binding mode on the Q45 by triple-clicking the Q45's button.
   The red and green LEDs flash alternately and the sensor searches for a Gateway in binding mode. After the Q45 is bound, the LEDs stay solid momentarily, then they flash together four times. The Q45 exits binding mode.
5. Label the sensor with the Q45's Node address number for future reference.
6. Repeat steps 2 through 5 for as many Q45s as are needed for your network.
7. On the Gateway: After binding all Q45s, exit binding mode.
   - For housed DX80 Gateways, double-click button 2.
   - For board-level DX80 Gateways, double-click the button.

For Gateways with single-line LCDs: After binding your Q45 to the Gateway, make note of the binding code displayed under the Gateway's *DVCFG menu, XADR submenu on the LCD. Knowing the binding code prevents having to re-bind all Q45s if your Gateway is ever replaced.

Q45BL-RG Modbus Registers

IO	Holding Register		IO Type	IO Range		Holding Register Representation	
	Gateway	Any Node		Min Value	Max Value	Min (Dec)	Max (Dec)
1	1	1 + (Node# × 16)	Discrete IN1	0	1	0	1
2	2	2 + (Node# × 16)	NOT Discrete IN 1	0	1	0	1
		...					
7	7	7 + (Node# × 16)	Reserved				
8	8	8 + (Node# × 16)	Device Message				
9	9	9 + (Node# × 16)	Discrete OUT 1	0	1	0	1

Continued on page 3

© Banner Engineering Corp. All rights reserved.

Continued from page 2

IO	Holding Register		IO Type	IO Range		Holding Register Representation	
	Gateway	Any Node		Min Value	Max Value	Min (Dec)	Max (Dec)
10	10	10 + (Node# × 16)	Discrete OUT 2	0	1	0	1
		...					
15	15	15 + (Node# × 16)	Control Message				
16	16	16 + (Node# × 16)	Reserved				

Application Example - Call for Parts

A Wireless Q45 (Button with Light model) can be paired with a B2Q Gateway model to be used as a call for parts hardware solution. The light on the Wireless Q45 Sensor is linked to a light on the B2Q Gateway to indicate when a part is needed. Pushing the button on the Q45 or on the Gateway changes the color of both lights to indicate when the part was picked.

The following parts were used:

- Gateway DX80G2M6-B2Q
- Wireless Q45 (Button with Light) model DX80N2Q45BL-RG-L bound to the Gateway as Node 01
- Light model TL50GRQ
- Cordset model MQDC-406

On the Gateway -- To map the I/O to the Wireless Q45, use the following DIP switch settings: DIP switch 6 is ON, switch 7 is OFF, and switch 8 is OFF. This setting maps the inputs on the Q45 to outputs on the Gateway and maps inputs on the Gateway to outputs on the Q45.

Install two jumper wires: one between DI1 and DO1 and one between DI2 and DO2. This maps the Gateway's outputs to the Gateway's inputs, which are then mapped back to the Wireless Q45 Sensor's output 1 (red light) and output 2 (green light).

Connect the tower light wires to the Gateway:

- Connect the red tower light (brown) wire to the Gateway's DO1 terminal.
- Connect the green tower light (black) wire to the Gateway's DO2 terminal.
- Connect the tower light's ground (blue) wire to the Gateway's GND terminal.

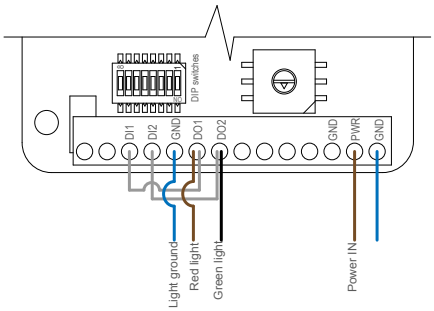

On the Wireless Q45 Sensor -- To configure the sensor for this call for parts application, use the default DIP switch settings (all set to the OFF position). Verify the Wireless Q45 is set to be Node 01.

Q45BL-xx Specifications

Radio Range

Range: 2.4 GHz, 65 mW (Internal antenna): Up to 1000 m (3280 ft) with line of sight

Transmit Power: 2.4 GHz: 65 mW EIRP

Radio range significantly decreases without line of sight. Always verify your wireless network's range by running a site survey.

Minimum Separation Distance

2.4 GHz, 65 mW: 0.3 m (1 ft)

2.4 GHz Compliance (DX80-2400 Radio Module)

Radio module is indicated by the product label marking

Contains FCC ID: UE300DX80-2400: FCC Part 15, Subpart C, 15.247

Radio Equipment Directive (RED) 2014/53/EU

Contains IC: 7044A-DX8024

ANATEL: 15966-21-04042

ANATEL
Agência Nacional de Telecomunicações

Spread Spectrum Technology

FHSS (Frequency Hopping Spread Spectrum)

Adjustments

Multi-turn sensitivity control (allows precise sensitivity setting - turn clockwise to increase gain.

Construction

Molded reinforced thermoplastic polyester housing, oring-sealed transparent Lexan® cover, molded acrylic lenses, and stainless steel hardware. Q45s are designed to withstand 1200 psi washdown.

Indicators

Red and green LEDs (radio function); amber LED indicates when input 1 is active

Typical Battery Life

Up to 2 years, typical

A typical battery life assumes an average of 10 seconds between sensor changes of state and the default 62.5-millisecond sample rate. Battery life is reduced to 1 year with an average of 1 second between changes of state.

Battery life with light continuously flashing: 3 months

Battery life with light continuously solid: 2 weeks

Button Input

Sample Rate: 62.5 milliseconds

Report Rate: On Change of State

ON Condition: Button pressed

OFF Condition: Button not pressed

Default Sensing Interval

62.5 milliseconds

Report Rate

On Change of State

© Banner Engineering Corp. All rights reserved.

Environmental Rating

NEMA 6P, IEC IP67

Operating Conditions

–40 °C to 70 °C (–40 °F to 158 °F)

90% relative humidity at 50 °C (non-condensing)

Certifications

(CE/UKCA approval only applies to 2.4 GHz models)

Banner Engineering BV
Park Lane, Culliganlaan 2F bus 3
1831 Diegem, BELGIUM

Turck Banner LTD Blenheim House
Blenheim Court
Wickford, Essex SS11 8YT
GREAT BRITAIN

Warnings (Internal Antenna Models)

Exporting Sure Cross® Radios. It is our intent to fully comply with all national and regional regulations regarding radio frequency emissions. **Customers who want to re-export this product to a country other than that to which it was sold must ensure the device is approved in the destination country.** Consult with Banner Engineering Corp. if the destination country is not on this list.

IMPORTANT: Please download the complete Q45BL Wireless Button with Light technical documentation, available in multiple languages, from www.bannerengineering.com for details on the proper use, applications, Warnings, and installation instructions of this device.

IMPORTANT: Por favor descargue desde www.bannerengineering.com toda la documentación técnica de los Q45BL Wireless Button with Light, disponibles en múltiples idiomas, para detalles del uso adecuado, aplicaciones, advertencias, y las instrucciones de instalación de estos dispositivos.

IMPORTANT: Veuillez télécharger la documentation technique complète des Q45BL Wireless Button with Light sur notre site www.bannerengineering.com pour les détails sur leur utilisation correcte, les applications, les notes de sécurité et les instructions de montage.

WARNING:

- **Do not use this device for personnel protection**
- Using this device for personnel protection could result in serious injury or death.
- This device does not include the self-checking redundant circuitry necessary to allow its use in personnel safety applications. A device failure or malfunction can cause either an energized (on) or de-energized (off) output condition.

IMPORTANT:

- **Electrostatic discharge (ESD) sensitive device**
- ESD can damage the device. Damage from inappropriate handling is not covered by warranty.
- Use proper handling procedures to prevent ESD damage. Proper handling procedures include leaving devices in their anti-static packaging until ready for use; wearing anti-static wrist straps; and assembling units on a grounded, static-dissipative surface.

Banner Engineering Corp Limited Warranty

Banner Engineering Corp. warrants its products to be free from defects in material and workmanship for one year following the date of shipment. Banner Engineering Corp. will repair or replace, free of charge, any product of its manufacture which, at the time it is returned to the factory, is found to have been defective during the warranty period. This warranty does not cover damage or liability for misuse, abuse, or the improper application or installation of the Banner product.

THIS LIMITED WARRANTY IS EXCLUSIVE AND IN LIEU OF ALL OTHER WARRANTIES WHETHER EXPRESS OR IMPLIED (INCLUDING, WITHOUT LIMITATION, ANY WARRANTY OF MERCHANTABILITY OR FITNESS FOR A PARTICULAR PURPOSE), AND WHETHER ARISING UNDER COURSE OF PERFORMANCE, COURSE OF DEALING OR TRADE USAGE.

This Warranty is exclusive and limited to repair or, at the discretion of Banner Engineering Corp., replacement. **IN NO EVENT SHALL BANNER ENGINEERING CORP. BE LIABLE TO BUYER OR ANY OTHER PERSON OR ENTITY FOR ANY EXTRA COSTS, EXPENSES, LOSSES, LOSS OF PROFITS, OR ANY INCIDENTAL, CONSEQUENTIAL OR SPECIAL DAMAGES RESULTING FROM ANY PRODUCT DEFECT OR FROM THE USE OR INABILITY TO USE THE PRODUCT, WHETHER ARISING IN CONTRACT OR WARRANTY, STATUTE, TORT, STRICT LIABILITY, NEGLIGENCE, OR OTHERWISE.**

Banner Engineering Corp. reserves the right to change, modify or improve the design of the product without assuming any obligations or liabilities relating to any product previously manufactured by Banner Engineering Corp. Any misuse, abuse, or improper application or installation of this product or use of the product for personal protection applications when the product is identified as not intended for such purposes will void the product warranty. Any modifications to this product without prior express approval by Banner Engineering Corp will void the product warranties. All specifications published in this document are subject to change; Banner reserves the right to modify product specifications or update documentation at any time. Specifications and product information in English supersede that which is provided in any other language. For the most recent version of any documentation, refer to: www.bannerengineering.com.

For patent information, see www.bannerengineering.com/patents.

Mexican Importer

Banner Engineering de Mèxico, S. de R.L. de C.V. | David Alfaro Siqueiros 103 Piso 2 Valle oriente | San Pedro Garza Garcia Nuevo Leòn, C. P. 66269

81 8363.2714

Notas Adicionales

Información México: La operación de este equipo está sujeta a las siguientes dos condiciones: 1) es posible que este equipo o dispositivo no cause interferencia perjudicial y 2) este equipo debe aceptar cualquier interferencia, incluyendo la que pueda causar su operación no deseada.

Banner es una marca registrada de Banner Engineering Corp.

© Banner Engineering Corp. All rights reserved.

Document title: Q45BL Wireless Button with Light
Part number: 166831
Revision: D
Original Instructions
© Banner Engineering Corp. All rights reserved.

166831

© Banner Engineering Corp. All rights reserved.