SSA-EB1PLx-0DEx Series Lighted Emergency Stop Button with ISD Product Manual

Original Instructions
p/n: 215157 Rev. F
28-May-26
© Banner Engineering Corp. All rights reserved. www.bannerengineering.com

ПРОМЭЛЕКТРОНИКА/ sales@prom-elec.com

Contents

Chapter 1 About This Document 3
1.1 Important... Read this before proceeding! 3
1.2 Use of Warnings and Cautions 3
1.3 EU Declaration of Conformity (DoC) 4

Chapter 2 Product Overview 5
2.1 Models 5
2.2 Emergency Stop Considerations 5
2.3 Overview 6

Chapter 3 Installation Instructions 7
3.1 Mechanical Installation 7
3.2 Installation Requirements 7
3.3 Output Signal Switching Devices (OSSDs) and External Device Monitoring (EDM) 8
3.3.1 Fault-Tolerant Output Feature 9
3.4 Wiring for a Single E-Stop 9
3.4.1 Wire the Device in Series 9
3.4.2 Wire the Device in Series Using the Quick Disconnect (QD) 10
3.5 Checkout 13
3.6 Resetting the Inputs 13
3.7 In-Series Diagnostic (ISD) Information 13
3.8 Install the Silicone Cover 14

Chapter 4 Specifications 15
4.1 Dimensions 16

Chapter 5 Accessories 17
5.1 Cordsets 17
5.2 Brackets 19
5.3 Adapters and Other Accessories 20
5.4 Safety Controllers 20
5.5 Universal (Input) Safety Modules 20
5.6 Pre-Installed Shroud 20

Chapter 6 Product Support and Maintenance 23
6.1 Maintenance and Service 23
6.2 Status Indicators 23
6.3 Information Available Using ISD 23
6.4 Contact Us 25
6.5 Banner Engineering Corp Limited Warranty 25

© Banner Engineering Corp. All rights reserved. www.bannerengineering.com

Chapter Contents

1.1 Important... Read this before proceeding! 3
1.2 Use of Warnings and Cautions 3
1.3 EU Declaration of Conformity (DoC) 4

Chapter 1 About This Document

1.1 Important... Read this before proceeding!

The user is responsible for satisfying all local, state, and national laws, rules, codes, and regulations relating to the use of this product and its application. Banner Engineering Corp. has made every effort to provide complete application, installation, operation, and maintenance instructions. Please contact a Banner Applications Engineer with any questions regarding this product.

The user is responsible for making sure that all machine operators, maintenance personnel, electricians, and supervisors are thoroughly familiar with and understand all instructions regarding the installation, maintenance, and use of this product, and with the machinery it controls. The user and any personnel involved with the installation and use of this product must be thoroughly familiar with all applicable standards, some of which are listed within the specifications. Banner Engineering Corp. makes no claim regarding a specific recommendation of any organization, the accuracy or effectiveness of any information provided, or the appropriateness of the provided information for a specific application.

WARNING:

- **Not a safeguarding device**
- Failure to follow these instructions could result in serious injury or death.
- This device is not considered a safeguarding device because it requires an overt action by an individual to stop machine motion or hazards. A safeguarding device limits or eliminates an individual's exposure to a hazard without action by the individual or others. This device cannot be substituted for required safeguarding. Refer to the applicable standards to determine those requirements.

1.2 Use of Warnings and Cautions

The precautions and statements used throughout this document are indicated by alert symbols and must be followed for the safe use of the SSA-EB1PLx-0Dx Series Lighted Emergency Stop Button with ISD. Failure to follow all precautions and alerts may result in unsafe use or operation. The following signal words and alert symbols are defined as follows:

Signal Word and Symbol	Definition
WARNING:	**Warnings** refer to potentially hazardous situations which, if not avoided, could result in serious injury or death.
CAUTION:	**Cautions** refer to potentially hazardous situations which, if not avoided, could result in minor or moderate injury.

These statements are intended to inform the machine designer and manufacturer, the end user, and maintenance personnel, how to avoid misapplication and effectively apply the SSA-EB1PLx-0Dx Series Lighted Emergency Stop Button with ISD to meet the various safeguarding application requirements. These individuals are responsible to read and abide by these statements.

© Banner Engineering Corp. All rights reserved.
www.bannerengineering.com

1.3 EU Declaration of Conformity (DoC)

Banner Engineering Corp. herewith declares that these products are in conformity with the provisions of the listed directives and all essential health and safety requirements have been met. For the complete DoC, please go to www.bannerengineering.com.

Product	Directive
SSA-EB1PLx-0Dx Series Lighted Emergency Stop Button with ISD	EU: Machinery Directive 2006/42/EC

Representative in EU: Spiros Lachandidis, Managing Director, **Banner Engineering BV** Park Lane | Culliganlaan 2F bus 3 | 1831 Diegem, BELGIUM

© Banner Engineering Corp. All rights reserved.

Chapter Contents

2.1 Models 5
2.2 Emergency Stop Considerations 5
2.3 Overview 6

Chapter 2 Product Overview

Figure 1. 30 mm mount model

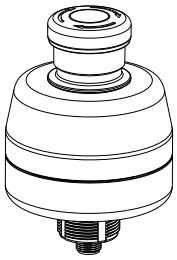

Figure 2. Flush mount model

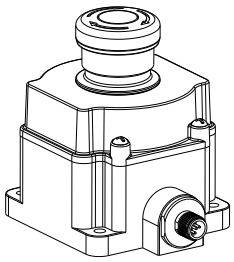

- Rugged design; easy installation with no assembly or individual wiring required
- Push-to-stop, twist-to-release, or pull-to-release operation per EN 60947-5-5
- Latching design complies with ISO 13850; direct (positive) opening operation per EN 60947-5-1
- Compliant with ANSI B11.19, NFPA 79, and IEC/EN 60204-1 Emergency Stop requirements
- "Safe Break Action" ensures OSSDs turn off if the contact block is separated from the actuator
- 8-pin M12 quick disconnect
- Armed state indication options include YELLOW, GREEN or no indication (OFF), depending on model
- All models illuminate red when actuated (button pushed); flashing red or solid red depends on model
- "Emergency Stop" legend included
- Two, solid-state, PNP current sourcing OSSD outputs
- In-Series Diagnostic (ISD) for button health and status information when used with a compatible Banner Safety Controller
- All models have a 40 mm "mushroom style" push button

2.1 Models

Model	Mounting Style	Reset Function	Illumination Color	
			Armed	Actuated
SSA-EB1PLYR-0DECQ8	30 mm	No	Yellow	Red Flashing
SSA-EB1PLXR-0DECQ8			Off	Red Flashing
SSA-EB1PLGR-0DECQ8			Green	Red Flashing
SSA-EB1PLYR-0DECQ8R		Yes	Yellow	Red Flashing
SSA-EB1PLXR-0DECQ8R			Off	Red Flashing
SSA-EB1PLGR-0DECQ8R			Green	Red Flashing
SSA-EB1PL-0DED1Q8	Flush	No	Off	Red Solid
SSA-EB1PLYR-0DED1Q8			Yellow	Red Flashing
SSA-EB1PLXR-0DED1Q8			Off	Red Flashing
SSA-EB1PLGR-0DED1Q8			Green	Red Flashing
SSA-EB1PLYR-0DED1Q8R		Yes	Yellow	Red Flashing
SSA-EB1PLXR-0DED1Q8R			Off	Red Flashing
SSA-EB1PLGR-0DED1Q8R			Green	Red Flashing

2.2 Emergency Stop Considerations

NFPA 79, ANSI B11.19, IEC/EN 60204-1, and ISO 13850 specify emergency stop requirements, including the following:

- Emergency-stop push buttons shall be located at each operator control station and at other operating stations where emergency shutdown is required.

© Banner Engineering Corp. All rights reserved.
www.bannerengineering.com

- Stop and emergency-stop push buttons shall be continuously operable and readily accessible from all control and operating stations where located. Do not mute or bypass E-stop buttons.
- Actuators of emergency-stop devices shall be colored red. The background immediately around the device actuator shall be colored yellow (where possible). The actuator of a push-button-operated device shall be of the palm or mushroom-head type.
- The emergency-stop actuator shall be a self-latching type.

WARNING:
- **Do not mute or bypass any emergency stop device**
- Muting or bypassing the safety outputs renders the emergency stop function ineffective.
- ANSI B11.19, NFPA 79 and IEC/EN 60204-1 require that the emergency stop function remains active at all times.

WARNING:
- **Connect two or more devices to the same safety module (controller) in series**
- Connecting devices in parallel defeats the switch contact monitoring ability of the module and creates an unsafe condition that could result in serious injury or death.
- Failure to test each device individually in this manner could result in undetected faults and create an unsafe condition that could result in serious injury or death.
- Connect the contacts of the corresponding pole of each switch in series. Never connect the contacts of multiple switches in parallel. Individually actuate (engage) each device, then release (or re-arm) and reset the safety module. This allows the module to check each switch and its wiring to detect faults. Perform this check during the prescribed checkouts.

2.3 Overview

The SSA-EB1PLx-0Dx Series Lighted Emergency Stop Button with ISD is a mushroom-style electro-mechanical emergency stop push button. When the button is armed and the device input requirements are satisfied, the two, solid-state PNP output signal switching devices (OSSDs) are on (conducting). When the button is pushed, the OSSDs are off (not conducting). The OSSDs remain in this condition until the push button is manually re-armed by pulling or twisting clockwise the red push button actuator.

The SSA-EB1PLx-0Dx..ECQ.. series has a 30 mm mounting base similar to Banner's OTB, VTB, and STB Optical Touch Buttons for ease of mounting without requiring an additional enclosure. The SSA-EB1PLx-0Dx..ED1Q.. series has a flat mounting base for ease of mounting without requiring an additional enclosure.

The illumination provides easy identification of a pushed/actuated button. An armed button will light a steady yellow or green illumination or be OFF (depending on model). A pushed/actuated button is indicated by a red flashing illumination. Internal or external faults are indicated by a double-flashing red illumination.

© Banner Engineering Corp. All rights reserved.

Chapter Contents

3.1 Mechanical Installation 7
3.2 Installation Requirements 7
3.3 Output Signal Switching Devices (OSSDs) and External Device Monitoring (EDM) 8
3.4 Wiring for a Single E-Stop 9
3.5 Checkout 13
3.6 Resetting the Inputs 13
3.7 In-Series Diagnostic (ISD) Information 13
3.8 Install the Silicone Cover 14

Chapter 3 Installation Instructions

3.1 Mechanical Installation

The SSA-EB1PLx-0Dx Series Lighted Emergency Stop Button with ISD is supplied with all necessary mounting hardware.

IMPORTANT: Install the emergency stop in a manner that discourages tampering or defeat. Mount emergency stops to prevent bypassing at the terminal chamber or quick disconnect (QD) connection.

The hardware supplied with the 30 mm mount SSA-EB1PLx-0Dx..ECQ.. series includes a jam nut, lock washer, lock ring, and seal washer. Use the lock ring to prevent rotation if a 5 mm keyway is provided in the 30 mm mounting hole. The threaded base contains external M30 threads for the supplied jam nut, as well as internal ½-14 NPSM threads for an alternate mounting option.

The hardware supplied with the flush mount SSA-EB1PLx-0Dx..ED1Q.. series includes four M5 screws and nuts.

Figure 3. Mounting the ..ECQ (30 mm) models

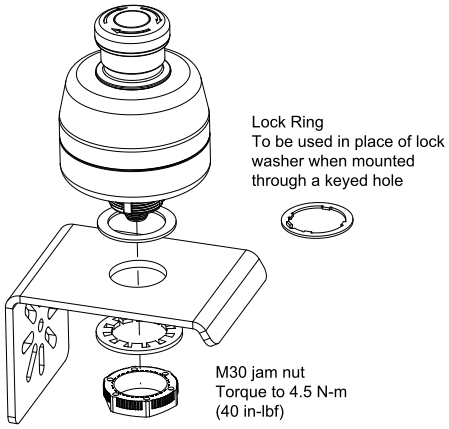

Figure 4. Mounting the ..ED1Q (flush mount) model

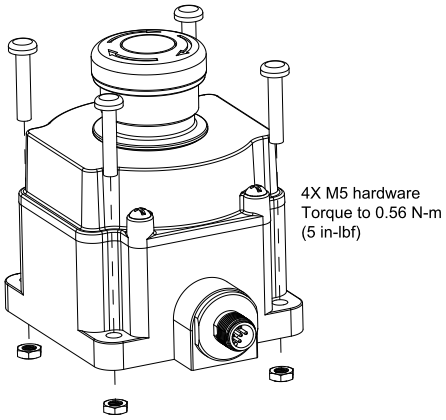

3.2 Installation Requirements

The device is intended for indoor use only and must not be affected by environmental conditions. Install the device so that operation is not impeded, but protected against inadvertent operation (for example, accidental actuation by being bumped or leaned against). Do not operate the switch using a tool. Do not expose the switch to excessive shocks and vibrations, otherwise the switch may be deformed or damaged, causing malfunction or operation failure.

Electrical installation must be made by qualified personnel[1] and must comply with NEC (National Electrical Code), NFPA 79 or IEC/EN 60204-1, and all applicable local standards. It is not possible to give exact wiring instructions for a device that

[1] A person who, by possession of a recognized degree or certificate of professional training, or who, by extensive knowledge, training and experience, has successfully demonstrated the ability to solve problems relating to the subject matter and work.

© Banner Engineering Corp. All rights reserved.

interfaces to a multitude of machine control configurations. The following is general in nature; it is recommended to perform a risk assessment to ensure appropriate application, interfacing/connection, and risk reduction (see ISO 12100 or ANSI B11.0).

WARNING:
- **Risk of electric shock**
- Use extreme caution to avoid electrical shock. Serious injury or death could result.
- Always disconnect power from the safety system (for example, device, module, interfacing, etc.), guarded machine, and/or the machine being controlled before making any connections or replacing any component. Lockout/tagout procedures might be required. Refer to OSHA 29CFR1910.147, ANSI Z244-1, or the applicable standard for controlling hazardous energy.
- Make no more connections to the device or system than are described in this manual. Electrical installation and wiring must be made by a Qualified Person[(2)] and must comply with the applicable electrical standards and wiring codes, such as the NEC (National Electrical Code), NFPA 79, or IEC 60204-1, and all applicable local standards and codes.

3.3 Output Signal Switching Devices (OSSDs) and External Device Monitoring (EDM)

The SSA-EB1PLx-0Dx is able to detect faults on OSSD1 and OSSD2. These faults include short circuits to +24 V DC and 0 V, and between OSSD1 and OSSD2.

Both OSSD outputs must be connected to the machine control so that the machine's safety-related control system interrupts the circuit or power to the machine primary control element(s) (MPCE), resulting in a non-hazardous condition.

Final switching devices (FSDs) typically accomplish this when the OSSDs go to an OFF state.

Refer to the output specifications and these warnings before making OSSD output connections and interfacing the SSA-EB1PLx-0Dx to the machine.

WARNING:
- **Interfacing both output signal switching devices (OSSD)**
- Failure to follow these instructions could result in serious injury or death.
- Unless the same degree of safety is maintained, never wire an intermediate device(s) (PLC, PES, PC) between the safety module outputs and the master stop control element it switches such that a failure causes a loss of the safety stop command or the failure allows the safety function to be suspended, overridden, or defeated.
- Connect both OSSD outputs to the machine control so that the machine’s safety-related control system interrupts the circuit to the machine primary control element(s), resulting in a non-hazardous condition.

WARNING:
- **Interfacing OSSD Outputs to Machine Inputs**
- Failure to properly interface the OSSD Outputs to the guarded machine could result in serious injury or death.
- To ensure proper operation, the Banner device output parameters and machine input parameters must be considered when interfacing the Banner device OSSD outputs to machine inputs. Design the machine control circuitry so that the maximum load resistance value is not exceeded and the maximum specified OSSD Off-state voltage does not result in an On condition.

External device monitoring (EDM) is a function used to monitor the state of the external, positively guided (mechanically linked) machine control contacts (Final Switching Devives (FSD) and/or MPCEs). The SSA-EB1PLx-0Dx does not include the

[(2)] A person who, by possession of a recognized degree or certificate of professional training, or who, by extensive knowledge, training and experience, has successfully demonstrated the ability to solve problems relating to the subject matter and work.

© Banner Engineering Corp. All rights reserved.

EDM function. As a result, the SSA-EB1PLx-0Dx should be used with an external safety monitoring device that monitors the status of the two SSA-EB1PLx-0Dx OSSDs and is capable of providing the EDM function.

Examples of appropriate external safety monitoring devices include the Banner **SC10-2ro** or **XS26-ISDx** Safety Controller.

WARNING:
- **The SSA-EB1PLx-0Dx does not have external device monitoring (EDM).**
- If EDM is required for the application, it must be implemented in the external control.

3.3.1 Fault-Tolerant Output Feature

Faults that do not immediately compromise the safe operation of the SSA-EB1PLx-0Dx (for example safety output to external potential, crosswire short safety output) result in a delayed switch-off of the safety outputs.

The safety outputs switch off when the error warning exceeds 20 minutes. In case of error warning, the E-stop will double-flash red.

Use this fault-tolerant output feature to run down the machinery in a controlled manner. After fixing the fault, the error message is confirmed by a voltage reset. The safe outputs enable and allow a restart.

Faults that directly affect the safe operation of the emergency stop device immediately cause a lockout condition and the OSSDs turn off.

3.4 Wiring for a Single E-Stop

Figure 5. Single SSA-EB1PLx-0Dx Series Lighted Emergency Stop Button with ISD with SC10-2ro.

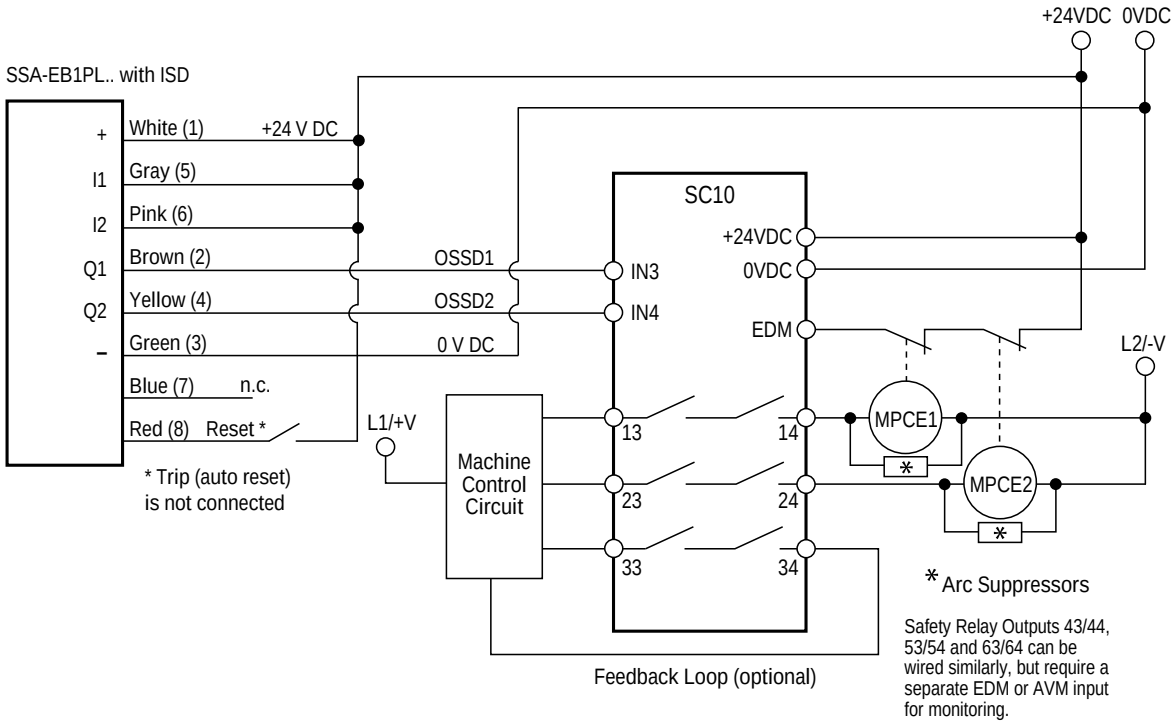

The SSA-EB1PLx-0Dx Series Lighted Emergency Stop Button with ISD can be connected in series or individually to a compatible Banner XS26-2 or SC10-2ro Safety Controller. See the XS26-2/SC10 Safety Controller Instruction Manual for additional details regarding input terminal combinations compatible with ISD.

3.4.1 Wire the Device in Series

To connect two or more SSA-EB1PLx-0Dx buttons in series, follow these steps.

1. Connect the safety outputs of the last emergency stop device to a safety monitoring unit.

© Banner Engineering Corp. All rights reserved.
www.bannerengineering.com

2. Connect the safety inputs of the first emergency stop device of the series to + 24 V DC.
3. Connect the safety outputs of the first emergency stop device to the safety inputs of the second emergency stop (and second to third, etc).
4. When all the emergency stop devices are armed, the last emergency stop device of the series connection will turn on its safety outputs.
5. If you are using an optional In-Series Diagnostic (ISD) module (SI-RFA-DM1), integrate the diagnostic module between the last emergency stop device and the safety monitoring module in the series connection.

   The status information can be retrieved from the diagnostic device.

IMPORTANT: Verify the SSA-EB1PLx-0Dx emergency stop device and the safety monitoring module are powered from the same power supply or the commons of the separate supplies are the same.

Figure 6. Series connection of multiple SSA-EB1PLx-0Dx.. without reset function wiring diagram.

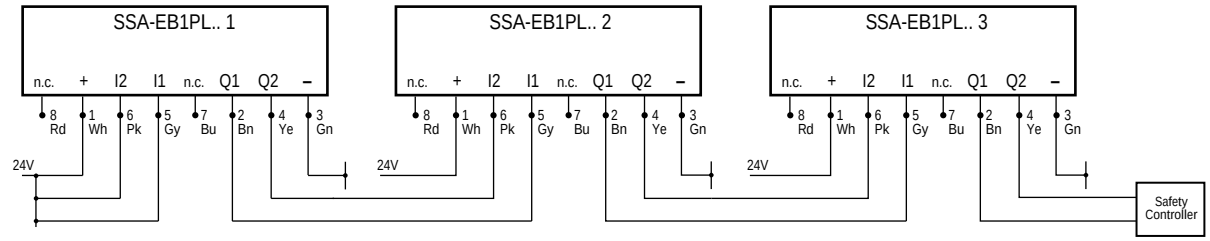

Figure 7. Series connection of multiple SSA-EB1PLx-0Dx..Q8R with reset function wiring diagram.

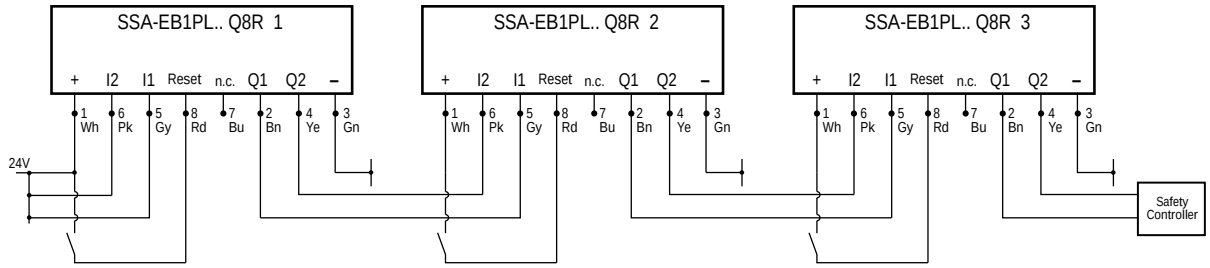

After the emergency device is rearmed, the optional reset function requires a manual acknowledgment before the safety output of the device is switched on (only that individual emergency stop device, not the entire chain).

3.4.2 Wire the Device in Series Using the Quick Disconnect (QD)

When connecting units in series, simplify the wiring using special t-adapters and low-cost unshielded four-wire double-ended cables.

A similar configuration is shown except the connections are all made using quick disconnects. The SSA-EB1PLx-0Dx E-Stops, SI-RFD switches, and the SSA-ISD Connect can be combined in a single chain.

1. Connect the female 4-pin M12 cable to the male 4-pin M12 of the series connection t-adapter (**SI-RFA-TS**).
2. If a manual reset model emergency stop device is used, connect the female 8-pin M12 of the Reset T-Adapter (**SI-RFA-TK**) to the male 8-pin M12 connector of the series connection t-adapter. Connect a female 4-pin M12 cable to the male 4-pin M12 QD of the t-adapter for connecting a reset switch.
3. Connect the SSA-EB1PLx-0Dx to the male 8-pin M12 connector of the t-adapter. Use **DEE2R-8xxD** extensions cables as needed.
4. Connect the male 4-pin M12 end of a double-ended cable to the female 4-pin M12 of the t-adapter. Connect the female 4-pin M12 end of the double-ended cable to the next series connection t-adapter (**SI-RFA-TS**).
5. At the end of the line a terminating plug (**SI-RFA-P**) is required to properly truncate the system.
6. The wired end of the 4-pin M12 cable (from step 1) can be wired directly to a Safety Monitoring Module or can be wired through an In-Series Diagnostic (ISD) module then to the Safety Monitoring device.

Verify that the SSA-EB1PLx-0Dx and the safety monitoring module are powered from the same power supply or the commons of the separate supplies are the same. Ensure that the voltage level at SSA-EB1PLx-0Dx #1 (furthest from the power supply) is above 19.5 V for the system to operate properly.

© Banner Engineering Corp. All rights reserved.
www.bannerengineering.com

Figure 8. SSA-EB1PLx-0Dx E-Stops with ISD Series Connection

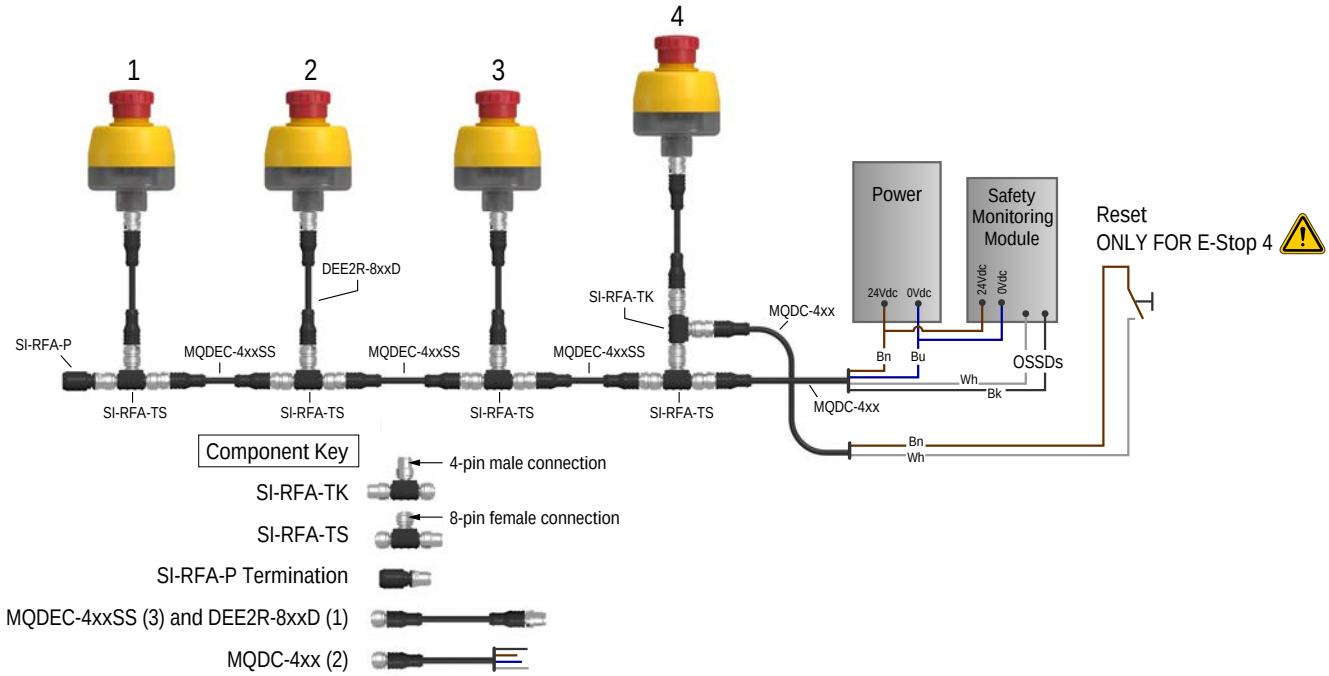

In a long series or series with many ISD devices, the voltage at all devices must stay above 19.5 V for proper operation.

An additional power supply may be required to maintain a minimum of 19.5 V at all devices. For examples of how to properly connect a second power supply, refer to "Figure: Option 1: Use a SI-RFA-TK Reset Connector in series with ISD Device. If available, set the power supplies for parallel output." on page 11 and "Figure: Option 2: Replace the terminator with a power supply. The OSSD1 and OSSD2 wires at power supply #2 must be connected to +24 V DC. If available, set the power supplies for parallel output." on page 12.

For guidance on maximum total cable length and maximum number of devices before an additional power supply may be needed, refer to "Figure: Maximum total cable length for a single power supply" on page 12. For using ISD information to monitor the individual device voltages, see "In-Series Diagnostic (ISD) Information" on page 13.

There are two options to connect an additional power supply.

*Figure 9. Option 1: Use a **SI-RFA-TK** Reset Connector in series with ISD Device. If available, set the power supplies for parallel output.*



© Banner Engineering Corp. All rights reserved.
www.bannerengineering.com

Figure 10. Option 2: Replace the terminator with a power supply. The OSSD1 and OSSD2 wires at power supply #2 must be connected to +24 V DC. If available, set the power supplies for parallel output.



Figure 11. Maximum total cable length for a single power supply

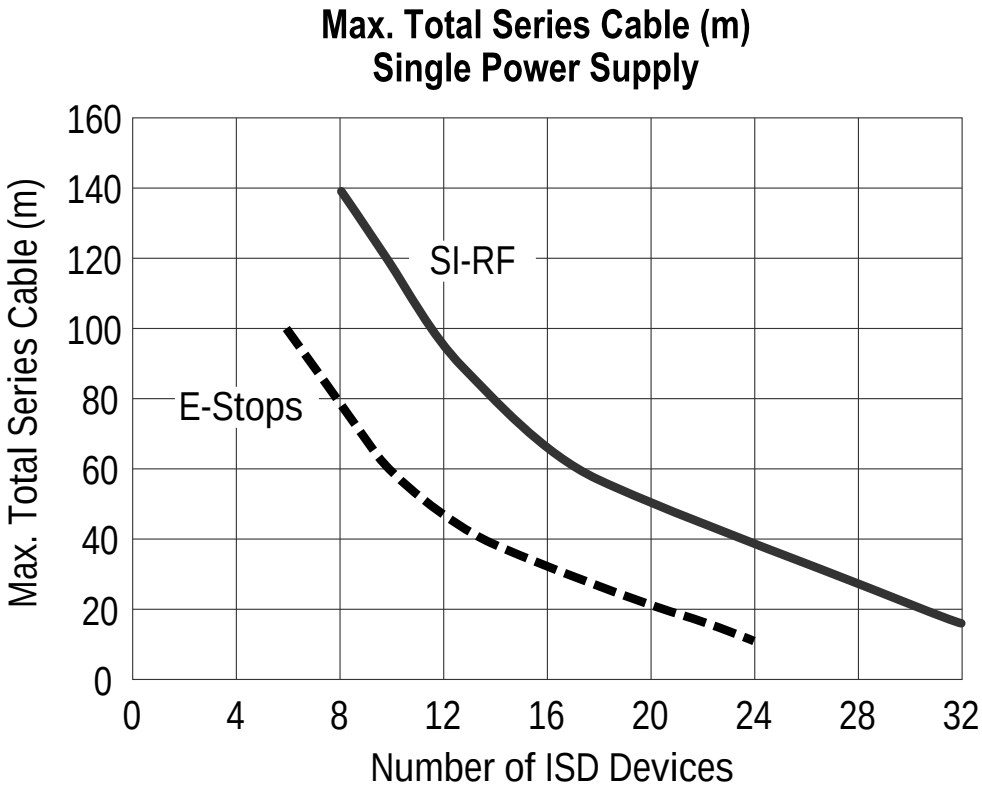

The SI-RFD switches and ISD Connect have similar current demands. However, when used with a number of lighted ISD emergency stop devices, the current draw of the emergency stop devices governs the cable lengths and when more power is needed. The maximum cable length between devices (including the last unit and the ISD evaluation device) is 30 meters (98.4 feet).

WARNING:

- **Safety devices with OSSDs and without ISD, such as safety light curtains, are not compatible.**
- Failure to follow these instructions could result in serious injury or death.
- Do not use safety devices with OSSDs and without ISD in a series connection of multiple ISD devices.

© Banner Engineering Corp. All rights reserved.

3.5 Checkout

At machine set up, a *Designated Person*[3] should test each safety point for proper machine shutdown response. A *Designated Person* should check the safety point for proper operation, physical damage, button looseness, and excessive environmental contamination. This should take place on a periodic schedule determined by the user, based on the severity of the operating environment and the frequency of switch actuations.

Adjust, repair, or replace components as needed. If inspection reveals contamination on the switch, thoroughly clean the switch and eliminate the cause of the contamination. Replace the switch and/or appropriate components when any parts or assemblies are damaged, broken, deformed, or badly worn; or if the electrical/mechanical specifications (for the environment and operating conditions) have been exceeded.

Always test the control system for proper functioning under machine control conditions after performing maintenance, replacing the safety point, or replacing any component of the device.

3.6 Resetting the Inputs

The reset function forces a local confirmation that the safety outputs are switched on after resetting the individual emergency stop button.

If an emergency stop button with a reset function is actuated and then armed/re-armed (pulled out), close and open the external reset switch within 0.25 seconds (minimum) to 1 second (maximum) to turn the e-stop buttons outputs on (assuming its inputs are satisfied).

The reset function only applies to the emergency stop button models with the reset functionality. This reset feature allows for a local reset at a given emergency stop button but does not allow for an entire safety system reset.

If a chain of ISD devices are cascaded (see "Wire the Device in Series" on page 9), the reset function only applies to the individual emergency stop button (1, 2, or 3 but not the series). If emergency stop button 2 is actuated then armed/re-armed, engaging the external reset switch of emergency stop buttons 1 or 3 will have no effect. Only engaging the external reset switch of emergency stop button 2 switches the chain's outputs on.

CAUTION: When power is switched on and the emergency stop buttons are in the on (armed) position, the safety outputs of the emergency stop buttons with the reset function will switch on without activating the reset button.

WARNING:

- Use of Auto or Manual Restart
- Failure to follow these instructions could result in series injury or death.
- Applying power to the Banner device, returning the emergency stop to the armed position, or resetting a manual restart condition MUST NOT initiate dangerous machine motion.
- Design the machine control circuitry so that one or more initiation devices must be engaged (in a conscious act) and the Banner device must be in Run mode to start the machine.

3.7 In-Series Diagnostic (ISD) Information

The information transmitted via the In-Series Diagnostic (ISD) interface is not safety-related. The diagnostic technology allows a wide range of device information to be loaded into the machine control system.



To interpret this information, Banner diagnostic modules are available, including the **SI-RF-DM1** and **-DM2** Diagnostic Modules and the **SC10-2roe** or **XS26-ISDx** Safety Controller. Refer to the instruction manuals for detailed information on the diagnostic devices. By means of diagnostics, the following information can be transmitted, among others:

[3] A *Designated Person* is identified in writing by the employer as being appropriately trained to perform a specified checkout procedure. A Qualified Person possesses a recognized degree or certificate or has extensive knowledge, training, and experience to solve problems relating to the emergency stop installation.

© Banner Engineering Corp. All rights reserved.

- Button Status (armed, off, faulted)
- Under-voltages in the series connection (chain)
- Attempts to remove buttons from the chain
- Wrong order of devices in the chain

At this time this information can be refined using the following interfaces:

- USB—Displays device information on the PC (requires using an **SI-RF-DM1** Diagnostic Module or an **SC10-2roe** or **XS26-ISDx** Safety Controller)
- IO-Link—Bus independent data reading into the control system (requires using the **SI-RF-DM1** or **SI-RF-DM2** Diagnostic Modules and an IO-Link master)
- Industrial Ethernet Protocols—Bus data reading into the control system (requires using the **SC10-2roe** or **XS26-ISDx** Safety Controller)

3.8 Install the Silicone Cover

To properly install the FDA-grade silicone cover and achieve an IP69 rating, follow these instructions.



1. Turn the cover inside-out, except for the top portion the button fits into.
2. Place the cover on top of the emergency stop unit.
3. Roll the cover onto the E-stop unit.
4. Continue rolling the cover down, around the base of the E-stop unit, until the entire unit is covered.
5. Mount the E-stop unit and cover assembly to a bracket wide enough to cover the assembly base. The cover should be clamped firmly between the E-stop unit and the bracket.

NOTE: This cover is suitable for applications with pull-to-release resetting methods.

NOTE: The FDA-grade silicone cover withstands high pressure, high-temperature washdown, and increases the product rating to IP69. The cover is ECOLAB® certified to withstand aggressive cleaning procedures with chemicals used in the food processing industry.

© Banner Engineering Corp. All rights reserved.

Chapter Contents

4.1 Dimensions..... 16

Chapter 4 Specifications

IMPORTANT: Connect the SSA-EB1PLx-0Dx Series Lighted Emergency Stop Button with ISD only to a SELV (Safety Extra-Low Voltage) for circuits without earth ground or a PELV (Protected Extra-Low Voltage) for circuits with earth ground power supply.

Rated Supply Voltage (Ue)
24 V DC + 15%, -20% (PELV/SELV power supply)

The external voltage supply must be capable of buffering brief mains interruptions of 20 ms, as specified in IEC/EN 60204-1.

Rated Isolation Voltage (Ui)
75 V DC

Rated Impulse Withstand Voltage (Uimp)
500 V

Rated Conditional Short-Circuit Current
100 A

No-load Current
100 mA typical at 24 V DC

120 mA maximum at 19.2 V DC

OSSD Outputs
Two, solid-state, current sourcing PNP outputs

Switching element function: PNP, NO

Voltage level: according to Type 3 EN 61131-2

Maximum operating current: 30 mA

Leakage current: ≤ 1 mA DC

On-state voltage: ≥ Ue – 3 V

Protection: Sustained short-circuit and overload protection; thermal / digital (clocking)

Test pulse duration: 70 µs

Test pulse rate: 1 s

Reset Input (specific models)
High Signal: 10 to 30 V DC

Low Signal: 0 to 3 V DC

Power Up Delay
≤ 2 s

Response Time
40 ms maximum + (7 ms × number of following ISD devices)

Housing/Button (Flush mount models)
Polycarbonate/Polyamide #10 or M5 (M5 hardware included); maximum tightening torque: 0.56 N·m (5 in·lbf)

Connector assembly: Nickel-plated zinc die cast

Housing/Button (30 mm models)
Polycarbonate/Polyamide threaded base has M30 × 1.5 external threads; maximum tightening torque: 4.5 N·m (40 in·lbf)

Connector assembly: Nickel-plated brass

Indication
(varies with model)

Yellow (590 nm), green (525 nm), red (618 nm)

Maximum Cable Length Between E-Stops
30 m

Of this 30 meters, only 10 meters can be 8-conductor cable. The capacitance between the inputs (I1 and I2) to outputs (Q1 and Q2) must be less than 500 pF.

EMC
According to EN 61326-1 and EN 61326-3-1

Safety Data
SIL 3 (IEC 61508)

Category 4, PL e (EN ISO 13849-1)

PFH_D: 6.9 × 10^{-9} 1/h according to EN 62061

Service Life: 20 years

B10d: 100,000 cycles

Vibration Resistance
Operating extremes: 10 Hz to 500 Hz, amplitude 0.35 mm acceleration 50 m/s^2

Operating Conditions
–25 °C to +50 °C (–13 °F to +122 °F)

45% to 85% relative humidity (no condensation)

Environmental Ratings
For Indoor Use Only

IP65 (EN 60529)

For the 30 mm models only with cover model **SSAEB1P-ECWC** installed: IP67, IP69 (EN 60529)

Certifications

Banner Engineering BV
Park Lane, Culliganlaan 2F bus 3
1831 Diegem, BELGIUM

EMERGENCY STOP DEVICE 29YL

UL certified to NISD NISD7 E186238

Required Overcurrent Protection

WARNING: Electrical connections must be made by qualified personnel in accordance with local and national electrical codes and regulations.

Overcurrent protection is required to be provided by end product application per the supplied table.

Overcurrent protection may be provided with external fusing or via Current Limiting, Class 2 Power Supply.

Supply wiring leads < 24 AWG shall not be spliced.

For additional product support, go to www.bannerengineering.com.

Supply Wiring (AWG)	Required Overcurrent Protection (A)	Supply Wiring (AWG)	Required Overcurrent Protection (A)
20	5.0	26	1.0
22	3.0	28	0.8
24	2.0	30	0.5

© Banner Engineering Corp. All rights reserved.
www.bannerengineering.com

4.1 Dimensions

All measurements are listed in millimeters, unless noted otherwise. The measurements provided are subject to change.

Figure 12. 30 mm Models

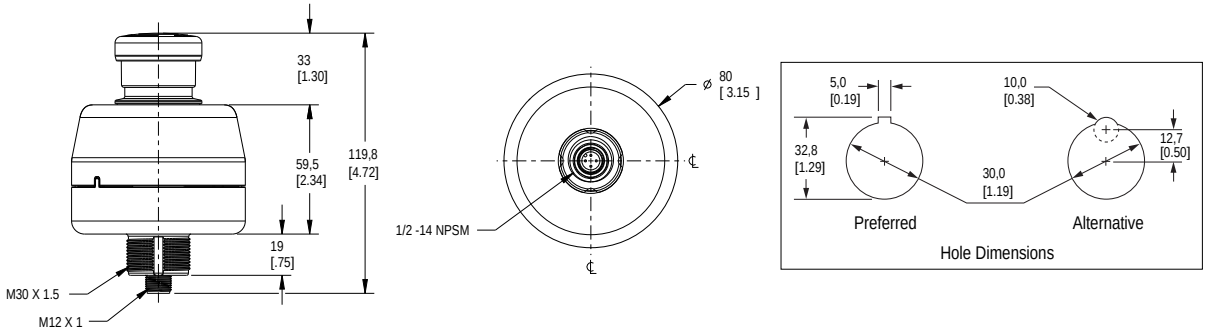

Figure 13. Washdown silicone cover SSA-EB1P-ECWC

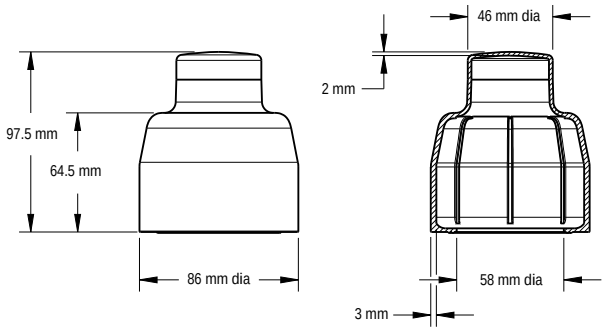

Figure 14. Flush mount models

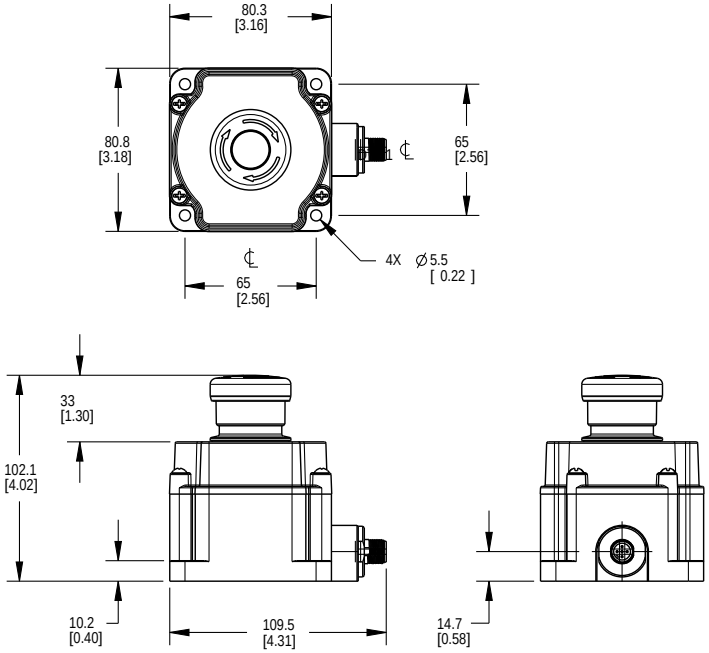

© Banner Engineering Corp. All rights reserved.

Chapter Contents

5.1 Cordsets 17
5.2 Brackets 19
5.3 Adapters and Other Accessories 20
5.4 Safety Controllers 20
5.5 Universal (Input) Safety Modules 20
5.6 Pre-Installed Shroud 20

Chapter 5 Accessories

5.1 Cordsets

8-pin A-Code Single-Ended M12 Female Cordsets (datasheet p/n 235941)				
Model	**Length**	**Dimensions (mm)**	**Pinout (Female)**	
BC-M12F8-24-1	1 m (3.28 ft)	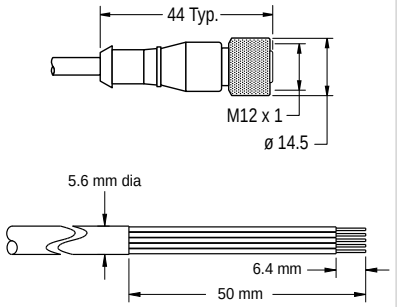	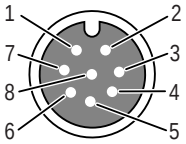	1 = White 2 = Brown 3 = Green 4 = Yellow 5 = Gray 6 = Pink 7 = Blue 8 = Red
BC-M12F8-24-2	2 m (6.56 ft)			
BC-M12F8-24-5	5 m (16.4 ft)			
BC-M12F8-24-10	10 m (30.81 ft)			

5-Pin Single-Ended M12 Female Cordsets				
Model	**Length**	**Style**	**Dimensions**	**Pinout (Female)**
MQDC1-501.5	0.5 m (1.5 ft)	Straight	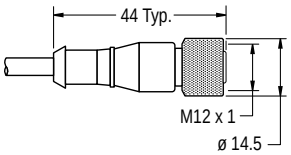	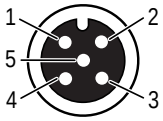 1 = Brown 2 = White 3 = Blue 4 = Black 5 = Gray
MQDC1-503	0.9 m (2.9 ft)			
MQDC1-506	2 m (6.5 ft)			
MQDC1-515	5 m (16.4 ft)			
MQDC1-530	9 m (29.5 ft)			
MQDC1-560	18 m (59 ft)			
MQDC1-5100	31 m (101.7 ft)			
MQDC1-506RA	2 m (6.5 ft)	Right-Angle	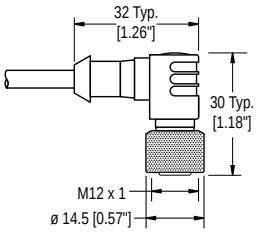	
MQDC1-515RA	5 m (16.4 ft)			
MQDC1-530RA	9 m (29.5 ft)			
MQDC1-560RA	19 m (62.3 ft)			

© Banner Engineering Corp. All rights reserved.
www.bannerengineering.com

4-Pin Single-Ended M12 Female Cordsets					
Model	**Length**	**Style**	**Dimensions**	**Pinout (Female)**	
MQDC-406	2 m (6.56 ft)	Straight	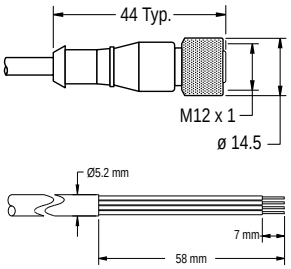	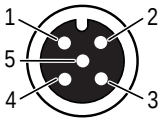	1 = Brown 2 = White 3 = Blue 4 = Black 5 = Not used c UL us
MQDC-415	5 m (16.4 ft)				
MQDC-430	9 m (29.5 ft)				
MQDC-450	15 m (49.2 ft)				
MQDC-406RA	2 m (6.56 ft)	Right-Angle	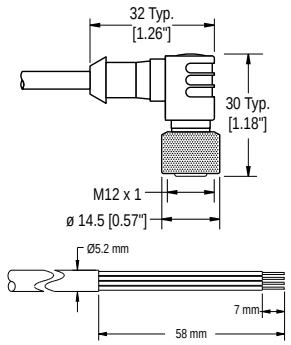	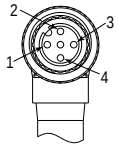	
MQDC-415RA	5 m (16.4 ft)				
MQDC-430RA	9 m (29.5 ft)				
MQDC-450RA	15 m (49.2 ft)				

4-Pin Double-Ended M12 Female to M12 Male Cordsets				
Model	**Length**	**Style**	**Dimensions**	**Pinout**
MQDEC-401SS	0.31 m (1 ft)	Male Straight / Female Straight	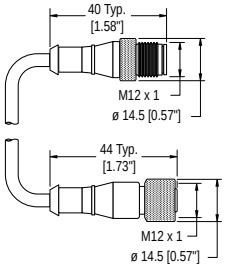	Female 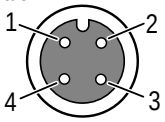 Male 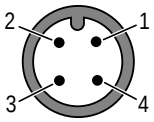 1 = Brown 2 = White 3 = Blue 4 = Black c UL us
MQDEC-403SS	0.91 m (2.99 ft)			
MQDEC-406SS	1.83 m (6 ft)			
MQDEC-412SS	3.66 m (12 ft)			
MQDEC-415SS	4.58 m (15 ft)			
MQDEC-420SS	6.10 m (20 ft)			
MQDEC-430SS	9.14 m (30.2 ft)			
MQDEC-450SS	15.2 m (49.9 ft)			
MQDEC-403RS	0.91 m (2.99 ft)	Male Right-Angle / Female Straight	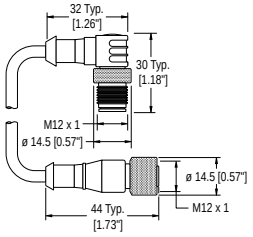	
MQDEC-406RS	1.83 m (6 ft)			
MQDEC-412RS	3.66 m (12 ft)			
MQDEC-420RS	6.10 m (20 ft)			
MQDEC-430RS	9.14 m (30.2 ft)			
MQDEC-450RS	15.2 m (49.9 ft)			
MQDEC-403RR	0.9 m (2.9 ft)	Male Right-Angle / Female Right-Angle	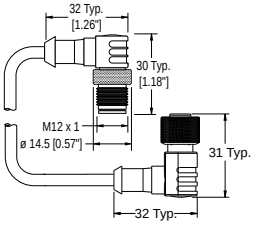	
MQDEC-406RR	1.8 m (5.9 ft)			
MQDEC-412RR	3.6 m (11.8 ft)			
MQDEC-420RR	6.1 m (20 ft)			

© Banner Engineering Corp. All rights reserved.
www.bannerengineering.com

8-Pin Double-Ended M12 Female to M12 Male Cordsets					
Model (8-pin/8-pin)	**Length**	**Style**	**Dimensions**	**Pinout**	
DEE2R-81D	0.3 m (1 ft)	Female Straight/ Male Straight	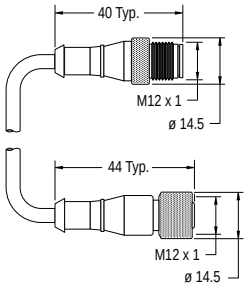	Female 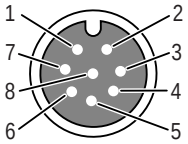 Male 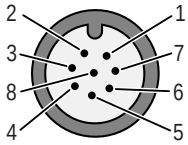	
DEE2R-825D	7.62 m (25 ft)				
DEE2R-850D	15.24 m (50 ft)				
DEE2R-875D	22.86 m (75 ft)				
DEE2R-8100D	30.48 m (100 ft)			1 = Brown 2 = Orange/Black 3 = Orange 4 = White	5 = Black 6 = Blue 7 = Green/Yellow 8 = Violet

5.2 Brackets

The SSA-MBK-EECx brackets offer:

- Horizontal and vertical (post) mounting
- Interchangeable positions of mounted devices (e.g. OTB/STB/VTB, E-Stop, K50s)

SSA-MBK-EEC1

- Single 30 mm hole
- 8 gauge steel, black finish (powder coat)
- Front surface for customer-applied labels
- CAD Files: DXF, PDF, IGS, STP

Hole size: A = ø 7 , B = ø 30

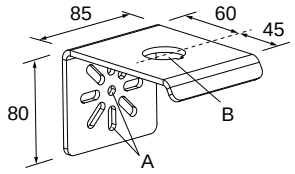

SSA-MBK-EEC2

- Two 30 mm holes
- 8 gauge steel, black finish (powder coat)
- Front surface for customer-applied labels
- CAD Files: DXF, PDF, IGS, STP

Hole size: A = ø 7 , B = ø 30

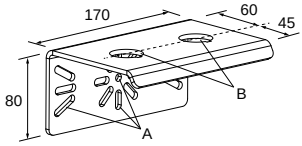

SSA-MBK-EEC1-SS

- Single 30 mm hole
- 8 gauge 316 stainless steel
- Front surface for customer-applied labels
- CAD Files: DXF, PDF, IGS, STP

Hole size: A = ø 7 , B = ø 30

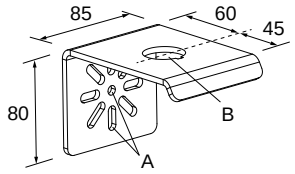

SSA-MBK-EEC3

- Three 30 mm holes
- 8 gauge steel, black finish (powder coat)
- Front surface for customer-applied labels
- CAD Files: DXF, PDF, IGS, STP

Hole size: A = ø 7 , B = ø 30

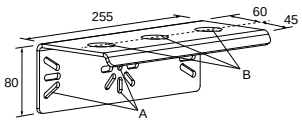

© Banner Engineering Corp. All rights reserved.
www.bannerengineering.com

5.3 Adapters and Other Accessories

Model	Description
SI-RFA-TS	SI-RF T-adapter for series connection, 4 pin to 8 pin to 4 pin, IP68 rated
SI-RFA-TK	SI-RF T-adapter for connection of the reset button, 8 pin to 4 pin to 8 pin, IP68 rated
SI-RFA-P	SI-RF Termination plug M12, IP68 rated
SI-RFA-DM1	SI-RF Diagnostic Module with 8 digital outputs and 1 diagnostic circuit Interfaces: IO-Link, USB 2.0
SI-RFA-DM2	SI-RF Diagnostic Module with 1 diagnostic circuit, IP69 rated Interfaces: IO-Link
SSA-EB1P-ECWC	FDA-grade silicone cover
CSB-M1250M1250-T	Splitter that can be used to add power between ISD devices

5.4 Safety Controllers

Safety Controllers provide a fully configurable, software-based safety logic solution for monitoring safety and non-safety devices.

For additional models and XS26 expansion modules, see instruction manual p/n 174868.

Table 1. Safety controller models

Non-Expandable Models	Expandable Models	Description
SC26-2	**XS26-2**	26 convertible I/O and 2 redundant solid-state safety outputs
SC26-2d	**XS26-2d**	26 convertible I/O and 2 redundant solid-state safety outputs with display
SC26-2e	**XS26-2e**	26 convertible I/O and 2 redundant solid-state safety outputs with Ethernet
SC26-2de	**XS26-2de**	26 convertible I/O and 2 redundant solid-state safety outputs with display and Ethernet
SC10-2roe		10 inputs, 2 redundant relay safety outputs (3 contacts each) (ISD and Ethernet compatible)
	XS26-ISDd	26 inputs, 2 redundant solid-state safety outputs with display, Ethernet, and 8 ISD channels

5.5 Universal (Input) Safety Modules

UM-FA-xA Safety Modules provide forced-guided, mechanically-linked relay (safety) outputs for the SSA-EB1PLx-0Dx system when an external manual reset (latch) is desired or external device monitoring is required in the application. See datasheet p/n 141249 for more information.

Model	Description
UM-FA-9A	3 normally open (N.O.) redundant-output 6 amp contacts
UM-FA-11A	2 normally open (N.O.) redundant-output 6 amp contacts, plus 1 normally closed (N.C.) auxiliary contact

5.6 Pre-Installed Shroud

To order a unit with a shroud (model **ESC-1-YW**) pre-installed, the model number has an **S1** inserted after the LED color characters (for example, **SSA-EB1PLYR-0DED1Q8** becomes **SSA-EB1PLYRS1-0DED1Q8**). Contact Banner Engineering for availability.

© Banner Engineering Corp. All rights reserved.
www.bannerengineering.com

Figure 15. SSA-EB1 PLXXS1 12ECQ8 E-Stop with a Shroud

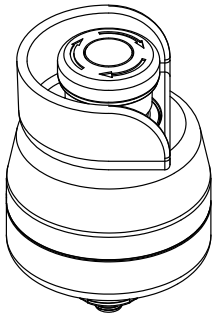

Figure 16. Dimensions for the SSA-EB1 PLXXS1 12ECQ8 E-stop button with shroud

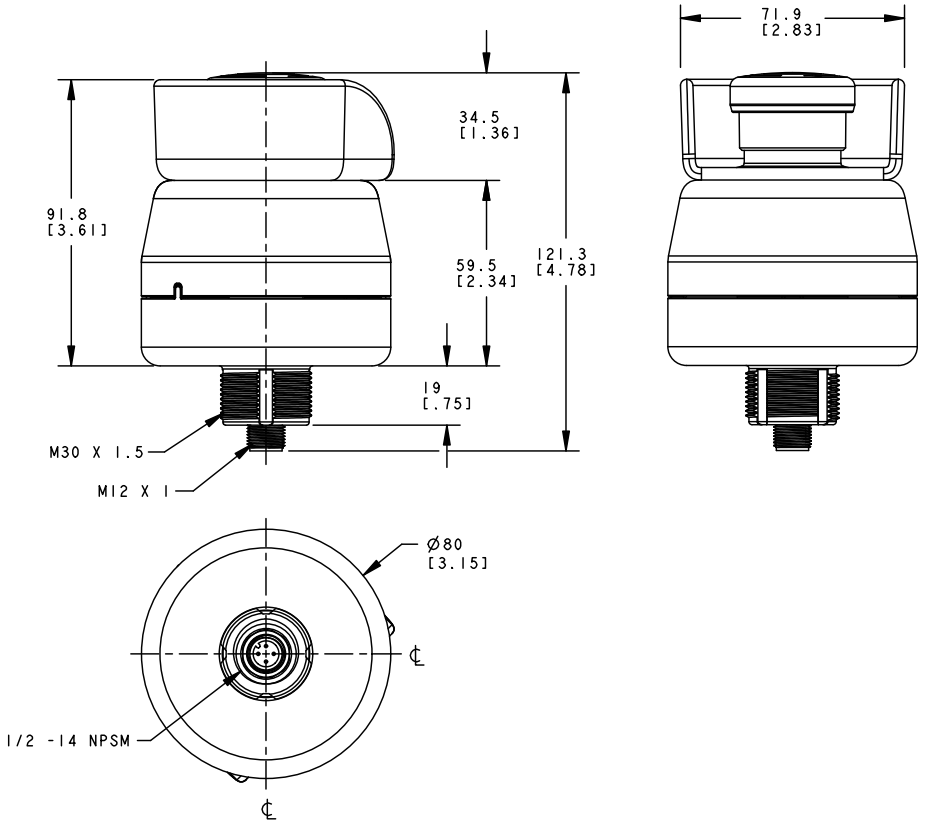

© Banner Engineering Corp. All rights reserved.
www.bannerengineering.com

Figure 17. SSA-EB1P PLS1 E-Stop with Shroud

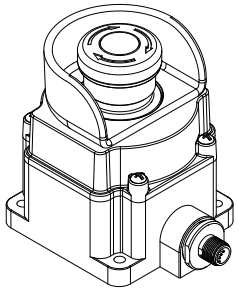

Figure 18. Dimensions for the SSA-EB1P PLS1 E-stop with shroud

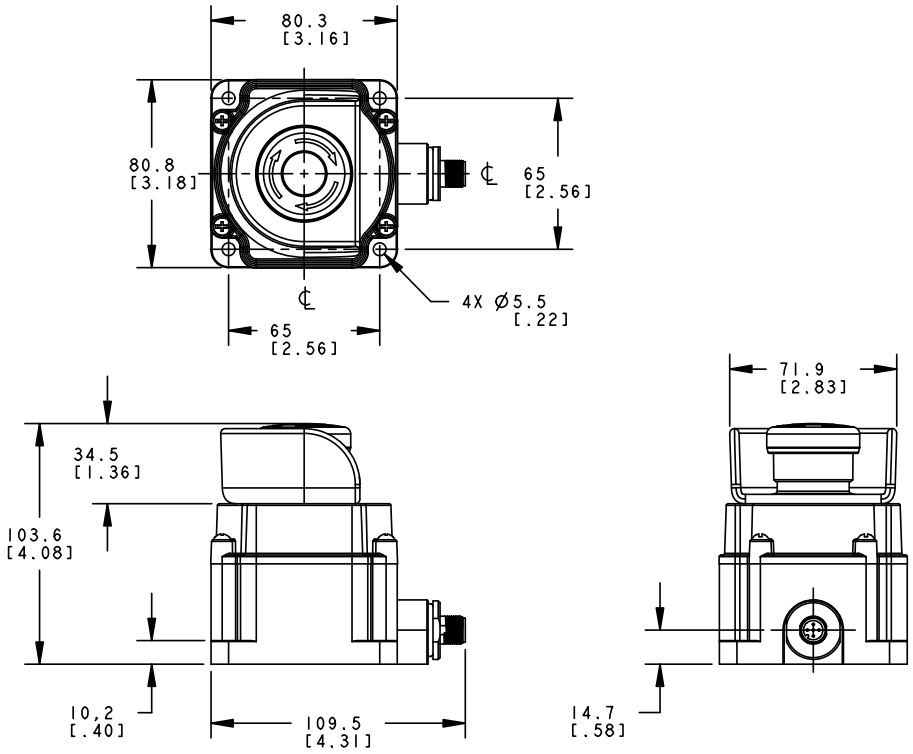

© Banner Engineering Corp. All rights reserved.

Chapter Contents

6.1 Maintenance and Service 23
6.2 Status Indicators 23
6.3 Information Available Using ISD 23
6.4 Contact Us 25
6.5 Banner Engineering Corp Limited Warranty 25

Chapter 6 Product Support and Maintenance

6.1 Maintenance and Service

Do not use alcoholic cleaning agents.

The SSA-EB1PLx-0Dx is maintenance-free.

For long-term and trouble-free operation, please periodically check the following points:

- solid fit of all components
- reliable switching function
- if damage occurs, please exchange the relevant components

Liability disclaimer— By breach of the given instructions (concerning the intended use, the safety instructions, the installation and connection through qualified personnel and the testing of the safety function) manufacturer's liability expires.

6.2 Status Indicators

Operating Mode	OSSD Inputs	Indication	OSSD Outputs
Power-up	X	Armed color (yellow, green or off, depending on the model) on for 0.5 s Red on for 0.5 s Off for 0.5 s minimum	OFF
Armed (button not pressed)	ON	Yellow, green, or off (depending on the model)	ON
Armed (button not pressed)	OFF	Yellow, green, or off (depending on the model)	OFF
Actuated (button pressed)	X	Flashing red	OFF
Re-armed, reset needed (specific models)	X	Red	OFF
Fault detected (non-critical)	X	Double flash red	ON
Fault detected (critical)	X	Double flash red	OFF

Faults that do not immediately compromise the safe operation of the emergency stop device (for example safety output to external potential, crosswire short safety output) result in a delayed switch-off of the OSSDs. The OSSDs will turn off when the error warning exceeds 20 minutes. See "Fault-Tolerant Output Feature" on page 9 for more details.

6.3 Information Available Using ISD

Obtain the following information from the ISD chain and ISD-enabled Safety Controller.

Information	Type	Data Size	Steps to Resolve
ISD chain count does not match configuration (XS26-ISD FID 5 or later (only when not using Auto Detect mode) and SC10 FID 2 or later.)	Controller Alert	1 bit	Check the number of physical units against the number configured in the chain
ISD chain order does not match configuration (XS26-ISD FID 5 or later (only when not using Auto Detect mode) and SC10 FID 2 or later.)	Controller Alert	1 bit	Check the order of the physical units against the configured order. Note the location of the terminator plug and the controller.

Continued on page 24

© Banner Engineering Corp. All rights reserved.
www.bannerengineering.com

Continued from page 23

Information	Type	Data Size	Steps to Resolve
ISD data update pending (no data or buffered data)	Controller Alert	1 bit	Caused by non-ISD devices in chain or a buffering situation If the data is not present from power up (never present): • Verify that all devices in ISD Chain are ISD enabled devices If data was present but then lost: • Verify that the chain has not been broken • Data could be disrupted and will return in a few seconds
Invalid (non-ISD) device in ISD chain	Controller Alert	1 bit	Incorrect data types are being received • Verify that all devices in the chain are Banner ISD devices
ISD device detected but not configured (*reserved* in XS26-ISD)	Informative	1 bit	• Verify the ISD chain is wired to the correct terminals • Verify that the correct input device type (ISD) was selected for this input in the configuration.
ISD chain terminator plug missing	ISD Status	1 bit	• Verify that the terminator plug has not come loose • Verify that the chain has not been broken (loose connections)
SI-RF high or unique sensor not taught an actuator	ISD Fault	1 bit	An SI-RF switch (-UP8 or -HP8) have not been taught • Configure the unit to its actuator per instructions in Banner datasheet p/n 208885
Wrong actuator presented to a high or unique sensor	ISD Fault	1 bit	An SI-RF switch (-UP8 or -HP8) is seeing an actuator but not the one to which it was configured. • Check for tampering (wrong actuator being used) • Teach High coded sensor (-HP8) the new actuator
Internal error on an ISD device in the chain	ISD Fault	1 bit	• Verify which device has the error, cycle power to the system • If the error persists, replace the device
ISD Output fault detected, output turn off counter started	ISD Fault	1 bit	ISD device output will turn off in 20 minutes • Verify which device has the error, check wiring for shorts • Cycle power, if issue persists, replace the device
Change in ISD chain detected (only in XS26-ISD FID 5 or later)	ISD Status	1 bit	If AutoDetect ISD is configured and an ISD chain length or order has changed, this flag will be set and must be recognized by the PLC.
ISD Count Change from Baseline Detected	ISD Status	1 bit	ISD device count has changed from the baseline count, verify the chain device count matches machine configuration.
ISD Chain output signal switching device (OSSD) status	ISD Status	1 bit	

Individual Unit Data - Flags		
Short Name	**Data Format**	**Description**
Actuator detected	1/0	Not applicable
Wrong actuator detected/Button armed	1/0	E-stop button is in the run state
Sensor not paired	1/0	Not applicable
Output 1	1/0	Output 1 is on
Output 2	1/0	Output 2 is on
Marginal range/Button armed	1/0	E-stop button is in the run state
Input 1	1/0	ISD device input 1 is on
Input 2	1/0	ISD device input 2 is on
Local reset expected	1/0	An ISD device with the latch feature requires a reset
Operating voltage warning	1/0	Voltage to the ISD device is at the limit of specifications
ISD data error	1/0	ISD error bit, corrupted data was received from the SI-RF ISD chain of switches.

Continued on page 25

© Banner Engineering Corp. All rights reserved.
www.bannerengineering.com

Continued from page 24

Individual Unit Data - Flags		
Short Name	**Data Format**	**Description**
Safety input fault	1/0	The system detected a fault on a safety input of an ISD device, power cycle required
Output error	1/0	ISD Device detects an output short to voltage or ground. This starts the "switch-off timer" counter.
Operating voltage error	1/0	Voltage to the ISD Device is above (over 30 V DC) or below (less than 19.2 V DC) limit of range.
Power cycle required	1/0	ISD Device detects a fault, a power cycled required.

Individual Unit Data - Configuration		
Short Name	**Data Format**	**Description**
Local reset unit	1/0	The ISD Device includes the latch feature
High coding level	1/0	Not applicable
Cascadable	1/0	The ISD Device includes the cascade feature Note: This will always be true for Emergency Stop models with ISD.
Fault tolerant outputs	1/0	Indicates that the ISD Device includes the fault tolerant output feature where output faults cause a 20 minute off delay/fault delay. Note: This will always be true for Emergency Stop models with ISD.

Individual Unit Data - Values		
Short Name	**Data Format**	**Description**
Device		Type of ISD Device
Expected code		Not applicable
Received code		Not applicable
Teach-ins remaining	number	Not applicable
Number of voltage errors	number	The number of voltage warnings received in the last 60 seconds (voltage is checked every second), a number between 0 and 60
Number of operations	number	The number of on/off cycles the device has experienced
Output switch-off time	number	The delay counter for certain output faults (0 - inactive, 20 to 1 - remaining minutes to device lockout state)
Range warning count	number	Not applicable
Supply voltage	number	The actual input voltage detected by the ISD device.
Internal temperature	number	The internal temperature of the ISD device (°C)
Actuator distance	number	Not applicable
Expected company name		Not applicable, value of 6 will be received
Received company name		Not applicable, this is the code received from an actuator (for RFID switches)

6.4 Contact Us

Banner Engineering Corp. | 9714 Tenth Avenue North | Plymouth, MN 55441, USA | Phone: + 1 888 373 6767

For worldwide locations and local representatives, visit www.bannerengineering.com.

6.5 Banner Engineering Corp Limited Warranty

Banner Engineering Corp. warrants its products to be free from defects in material and workmanship for one year following the date of shipment. Banner Engineering Corp. will repair or replace, free of charge, any product of its manufacture which, at the time it is returned to the factory, is found to have been defective during the warranty period. This warranty does not cover damage or liability for misuse, abuse, or the improper application or installation of the Banner product.

THIS LIMITED WARRANTY IS EXCLUSIVE AND IN LIEU OF ALL OTHER WARRANTIES WHETHER EXPRESS OR IMPLIED (INCLUDING, WITHOUT LIMITATION, ANY WARRANTY OF MERCHANTABILITY OR FITNESS FOR A PARTICULAR PURPOSE), AND WHETHER ARISING UNDER COURSE OF PERFORMANCE, COURSE OF DEALING OR TRADE USAGE.

This Warranty is exclusive and limited to repair or, at the discretion of Banner Engineering Corp., replacement. **IN NO EVENT SHALL BANNER ENGINEERING CORP. BE LIABLE TO BUYER OR ANY OTHER PERSON OR ENTITY FOR ANY EXTRA COSTS, EXPENSES, LOSSES, LOSS OF PROFITS, OR ANY INCIDENTAL, CONSEQUENTIAL OR SPECIAL DAMAGES RESULTING FROM ANY PRODUCT DEFECT OR FROM THE USE OR INABILITY TO USE THE PRODUCT, WHETHER ARISING IN CONTRACT OR WARRANTY, STATUTE, TORT, STRICT LIABILITY, NEGLIGENCE, OR OTHERWISE.**

Banner Engineering Corp. reserves the right to change, modify or improve the design of the product without assuming any obligations or liabilities relating to any product previously manufactured by Banner Engineering Corp. Any misuse, abuse, or improper application or installation of this product or use of the product for personal protection applications when the product is identified as not intended for such purposes will void the product warranty. Any modifications to this product without prior express approval by Banner Engineering Corp will void the product warranties. All specifications published in this document are subject to change;

© Banner Engineering Corp. All rights reserved.
www.bannerengineering.com

Banner reserves the right to modify product specifications or update documentation at any time. Specifications and product information in English supersede that which is provided in any other language. For the most recent version of any documentation, refer to: www.bannerengineering.com.

For patent information, see www.bannerengineering.com/patents.

© Banner Engineering Corp. All rights reserved.

LinkedIn

X

Facebook

Instagram



© 2026. All rights reserved.
www.bannerengineering.com