Features

30 mm Multicolor RGB Devices (Indicator and Touch)

This datasheet contains limited information on K30 Pro Devices with PICK-IQ®. For complete information on configuration, performance, troubleshooting, dimensions, and accessories, please refer to the PICK-IQ® Devices Instruction Manual. Go to www.bannerengineering.com and search 206185 to view the PICK-IQ® Devices Instruction Manual or 209995 to view the Device Register Map. Use of this document assumes familiarity with pertinent industry standards and practices.

- PICK-IQ® gives full access to color, flashing, rotating, and dimming settings as well as advanced animations such as dynamic sequence mode and LED control
- Output settings, including on and off delays, output function, and output state are also available with PICK-IQ
- PICK-IQ brings faster response speed and simplified programming to Modbus RTU communication



Indicator



Touch Button

WARNING:

- **Do not use this device for personnel protection**
- Using this device for personnel protection could result in serious injury or death.
- This device does not include the self-checking redundant circuitry necessary to allow its use in personnel safety applications. A device failure or malfunction can cause either an energized (on) or de-energized (off) output condition.

Models

Touch Button Models

- Excellent immunity to false triggering by water spray, oils, and other foreign materials
- Rated IP67 and IP69K per ISO 20653
- Can be actuated with bare hands or gloves; adjustable sensitivity

Model Name	Style	Activation Method	Housing	Control	Connector[1]
K30PTSQ	Programmable	Touch	Standard Dome	Serial, PICK-IQ®	Integral 4-pin M12 male quick-disconnect connector
K30PTSQ2PS					Dual 240 mm (9.45 in) PVC-jacketed cables with 5-pin M12 male and 5-pin M12 female quick-disconnect connectors

Indicator Models

- Bright, uniform indicator light
- Rated IP67 and IP69K per ISO 20653

Model Name	Style	Housing	Control	Connector[1]
K30PLSQ	Programmable	Standard Dome	Serial, PICK-IQ®	Integral 4-pin M12 male quick-disconnect connector
K30PLSQ2PS				Dual 240 mm (9.45 in) PVC-jacketed cables with 5-pin M12 male quick-disconnect connectors

[1] Models with a quick-disconnect connector require a mating cordset.

Original Instructions
09-Oct-25

© Banner Engineering Corp. All rights reserved.
www.bannerengineering.com

211467
p/n: 211467 Rev. B

ПРОМЭЛЕКТРОНИКА/ sales@prom-elec.com

Wiring

Compatible cordsets can be found in the PICK-IQ Devices Instruction Manual (206185).

Wiring for the Quick-Disconnect Models

4-pin M12 Male	4-pin M12 Female	Pin	Wire Color	Connection
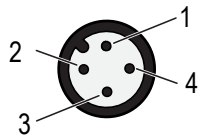	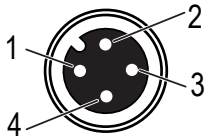	1	brown	10 V DC to 30 V DC
		2	white	RS-485 (+)
		3	blue	DC common
		4	black	RS-485 (-)

Wiring for the Dual Cable Models

5-pin M12 Male	5-pin M12 Female	Pin	Wire Color	Connection
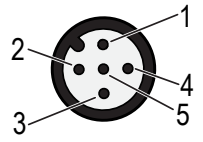	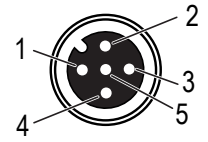	1	brown	10 V DC to 30 V DC
		2	white	RS-485 (+)
		3	blue	DC common
		4	black	RS-485 (-)
		5	gray	Shield

Specifications

Supply Voltage

10 V DC to 30 V DC

Supply Current

Indicator Models:

60 mA maximum current at 10 V DC
28 mA typical at 24 V DC

Touch Models:

65 mA maximum at 10 V DC
30 mA typical at 24 V DC

Supply Protection Circuitry

Protected against reverse polarity and transient voltages

Operating Conditions

–40 °C to +50 °C (–40 °F to +122 °F)

Humidity: 90% at +50 °C maximum relative humidity (non-condensing)

Storage: –40 °C to +70 °C (–40 °F to +158 °F)

Environmental Rating

IP67, IP69K per ISO 20653[(2)]

Touch Dwell Time

If touch dwells for longer than 60 seconds, the output will revert to the untouched state

Touch Response Time

Input Response: 5 ms minimum

Touch Response: 300 ms maximum (Standard Sensitivity touch response)

Mounting

M22 × 1.5 threaded base, maximum torque 4.5 N·m (40 in·lbf)

Construction

Base, Dome, and Nut: Polycarbonate

Vibration and Mechanical Shock

Meets IEC 60068-2-6 requirements (Vibration: 10 Hz to 55 Hz, 1.0 mm amplitude, 5 minutes sweep, 30 minutes dwell)

Meets IEC 60068-2-27 requirements (Shock: 30G 11 ms duration, half sine wave)

[(2)] Q2PS models must be installed to protect the cable and cable entrance from high-pressure spray to meet IP69K.

Connections

Integral 4-pin M12 male quick-disconnect connector or dual 240 mm (9.45 in) PVC-jacketed cables with 5-pin M12 male and 5-pin M12 female quick-disconnect connectors, depending on model

Models with a quick-disconnect connector require a mating cordset

Required Overcurrent Protection

WARNING: Electrical connections must be made by qualified personnel in accordance with local and national electrical codes and regulations.

Overcurrent protection is required to be provided by end product application per the supplied table.

Overcurrent protection may be provided with external fusing or via Current Limiting, Class 2 Power Supply.

Supply wiring leads < 24 AWG shall not be spliced.

For additional product support, go to www.bannerengineering.com.

Supply Wiring (AWG)	Required Overcurrent Protection (A)	Supply Wiring (AWG)	Required Overcurrent Protection (A)
20	5.0	26	1.0
22	3.0	28	0.8
24	2.0	30	0.5

© Banner Engineering Corp. All rights reserved.
www.bannerengineering.com

Certifications

Banner Engineering BV
Park Lane, Culliganlaan 2F bus 3
1831 Diegem, BELGIUM

Turck Banner LTD Blenheim House
Blenheim Court
Wickford, Essex SS11 8YT
GREAT BRITAIN

Default Indicator Characteristics

Color	Dominant Wavelength (nm) or Color Temperature (CCT)	Color Coordinates[3]		Lumen Output (Typical at 25 °C)	
		x	y	Touch Button Models	Indicator Models
Green	522	0.154	0.7	7.7	8.7
Red	620	0.689	0.309	3.1	3.6
Yellow	576	0.467	0.463	7.8	8.9
Blue	466	0.14	0.054	1.7	1.9
White	5700K	0.328	0.337	9.6	10.7
Cyan	493	0.157	0.331	8.7	9.9
Magenta	–	0.392	0.186	4.2	4.6
Amber	589	0.556	0.42	5.8	6.4
Rose	–	0.525	0.237	3.5	3.9
Lime Green	562	0.383	0.523	10	11.5
Sky Blue	486	0.145	0.24	9.2	10.5
Orange	599	0.616	0.37	4.6	5.1
Violet	–	0.224	0.099	3.4	3.9
Spring Green	508	0.155	0.524	8	9

FCC Part 15 Class B for Unintentional Radiators

(Part 15.105(b)) This equipment has been tested and found to comply with the limits for a Class B digital device, pursuant to part 15 of the FCC Rules. These limits are designed to provide reasonable protection against harmful interference in a residential installation. This equipment generates, uses, and can radiate radio frequency energy and, if not installed and used in accordance with the instructions, may cause harmful interference to radio communications. However, there is no guarantee that interference will not occur in a particular installation. If this equipment does cause harmful interference to radio or television reception, which can be determined by turning the equipment off and on, the user is encouraged to try to correct the interference by one or more of the following measures:

- Reorient or relocate the receiving antenna.
- Increase the separation between the equipment and receiver.
- Connect the equipment into an outlet on a circuit different from that to which the receiver is connected.
- Consult the dealer or an experienced radio/TV technician for help.

(Part 15.21) Any changes or modifications not expressly approved by the party responsible for compliance could void the user's authority to operate this equipment.

Industry Canada ICES-003(B)

This device complies with CAN ICES-3 (B)/NMB-3(B). Operation is subject to the following two conditions: 1) This device may not cause harmful interference; and 2) This device must accept any interference received, including interference that may cause undesired operation.

Cet appareil est conforme à la norme NMB-3(B). Le fonctionnement est soumis aux deux conditions suivantes : (1) ce dispositif ne peut pas occasionner d'interférences, et (2) il doit tolérer toute interférence, y compris celles susceptibles de provoquer un fonctionnement non souhaité du dispositif.

Dimensions

All measurements are listed in millimeters [inches], unless noted otherwise. The measurements provided are subject to change.

[3] Refer to the CIE 1931 (x,y) Chromaticity Diagram to show equivalent color with indicated color coordinates. Actual coordinates may differ ± 5%.

© Banner Engineering Corp. All rights reserved.
www.bannerengineering.com

Indicator Models

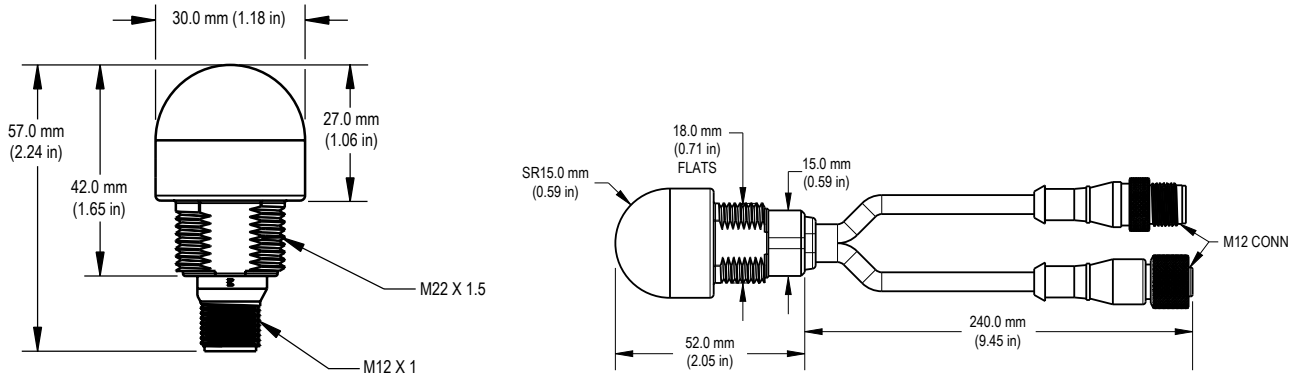

Touch Button Models

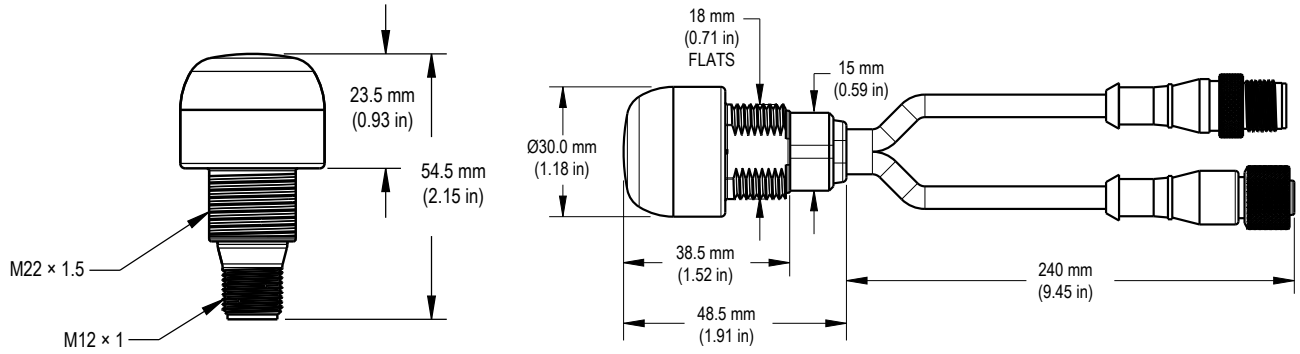

Banner Engineering Corp Limited Warranty

Banner Engineering Corp. warrants its products to be free from defects in material and workmanship for one year following the date of shipment. Banner Engineering Corp. will repair or replace, free of charge, any product of its manufacture which, at the time it is returned to the factory, is found to have been defective during the warranty period. This warranty does not cover damage or liability for misuse, abuse, or the improper application or installation of the Banner product.

THIS LIMITED WARRANTY IS EXCLUSIVE AND IN LIEU OF ALL OTHER WARRANTIES WHETHER EXPRESS OR IMPLIED (INCLUDING, WITHOUT LIMITATION, ANY WARRANTY OF MERCHANTABILITY OR FITNESS FOR A PARTICULAR PURPOSE), AND WHETHER ARISING UNDER COURSE OF PERFORMANCE, COURSE OF DEALING OR TRADE USAGE.

This Warranty is exclusive and limited to repair or, at the discretion of Banner Engineering Corp., replacement. **IN NO EVENT SHALL BANNER ENGINEERING CORP. BE LIABLE TO BUYER OR ANY OTHER PERSON OR ENTITY FOR ANY EXTRA COSTS, EXPENSES, LOSSES, LOSS OF PROFITS, OR ANY INCIDENTAL, CONSEQUENTIAL OR SPECIAL DAMAGES RESULTING FROM ANY PRODUCT DEFECT OR FROM THE USE OR INABILITY TO USE THE PRODUCT, WHETHER ARISING IN CONTRACT OR WARRANTY, STATUTE, TORT, STRICT LIABILITY, NEGLIGENCE, OR OTHERWISE.**

Banner Engineering Corp. reserves the right to change, modify or improve the design of the product without assuming any obligations or liabilities relating to any product previously manufactured by Banner Engineering Corp. Any misuse, abuse, or improper application or installation of this product or use of the product for personal protection applications when the product is identified as not intended for such purposes will void the product warranty. Any modifications to this product without prior express approval by Banner Engineering Corp will void the product warranties. All specifications published in this document are subject to change; Banner reserves the right to modify product specifications or update documentation at any time. Specifications and product information in English supersede that which is provided in any other language. For the most recent version of any documentation, refer to: www.bannerengineering.com.

For patent information, see www.bannerengineering.com/patents.

© Banner Engineering Corp. All rights reserved.
www.bannerengineering.com