A-GAGE® MINI-ARRAY® Two Piece Measuring Light Screen 3/8 Inch

Instruction Manual

Original Instructions
196876 Rev. B
28 April 2017
© Banner Engineering Corp. All rights reserved

BANNER®
more sensors, more solutions

196876

ПРОМЭЛЕКТРОНИКА/ sales@prom-elec.com

Contents

1 Product **Description** 3
1.1 Models 3
2 System Overview 4
2.1 System Features 4
2.2 Easy-to-Understand Diagnostic LEDs 4
2.3 Two Solid-State Outputs 5
2.4 EIA-485 Interface 5
2.5 Sensing Scan Time 5
2.6 Supplied System Software 5
2.7 Part Profiling Applications 5
2.8 System Self-Diagnostics 5
2.8.1 Marginal Alignment/Dirty Lens Detection 6
2.8.2 Fault Detection and Sensor Degradation Operation 6
3 **Installation** 7
3.1 Emitter and Receiver Mounting 7
3.2 Center Bracket Mounting 8
3.3 Emitter and Receiver Wiring 9
3.4 Optical Alignment 9
4 Serial **Communication** 10
4.1 Serial Communication Data Format 10
4.2 Request Sensor to Scan Command (Command 0×53) 10
4.3 Request Sensor to Transmit all Receiver Channel State (Command 0x64) 10
4.4 Request Sensor to Transmit System Status Information (Command 0x66) 11
4.5 Request Sensor to Transmit One or Two Measurement Values (Command 0x67) 11
5 **Specifications** 13
5.1 Dimensions 13
5.2 Emitter and Receiver Mounting Bracket Dimensions 15
6 **Troubleshooting** using the **Diagnostic** LEDs 16
7 Accessories 17
7.1 Cordsets 17
7.2 Anti-Vibration Mounting Kits 17
7.3 Center Mounting Bracket Kit 17
8 Contact Us 18
9 Banner Engineering Corp. Limited Warranty 19

1 Product **Description**

A-GAGE MINI-ARRAY Two-Piece Measuring Light Screen with 9.5 mm (3/8 inch) Beam Spacing

- Simple two-piece measuring light screen for inspection, profiling, and object detection
- Detects single-fault emitter, receiver and dirty lens conditions; continues to function in single-fault conditions
- Diagnostic LEDs provide a simple means of monitoring sensor performance
- Models available with array lengths from 150 to 1830 mm in 150 mm increments (6 inches to 6 feet in 6 inch increments)
- Beam spacing 9.5mm (3/8 in)
- Two discrete outputs plus EIA-485 serial communication
- System is configurable via the EIA-485 serial interface and the Banner Sensors GUI software
- Alarm output signals dirty lens and system fault conditions
- EIA-485 serial communication enables a computer to process scan data and system status

WARNING: Not To Be Used for Personnel **Protection**

Never use this device as a sensing device for personnel **protection.** Doing so could lead to serious injury or death. This device does not include the self-checking redundant circuitry necessary to allow its use in personnel safety applications. A sensor failure or malfunction can cause either an energized or de-energized sensor output condition.

1.1 Models

Emitter/Receiver Models	Array Length (Y)	Housing Length (L1)	Total Beams	Sensor Scan Time [1]		
				Interlaced Scan	Straight Scan	
MAE632Q **Emitter** MAR632NX485Q Receiver	143 mm (5.6 in)	231 mm (9.1 in)	16	2.5 ms	1.5 ms	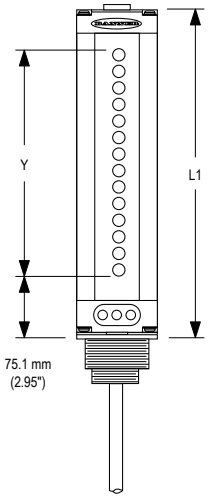
MAE1232Q **Emitter** MAR1232NX485Q Receiver	295 mm (11.62 in)	384 mm (15.1 in)	32	4.8 ms	2.6 ms	
MAE1832Q **Emitter** MAR1832NX485Q Receiver	448 mm (17.62 in)	536 mm (21.1 in)	48	7.0 ms	3.7 ms	
MAE2432Q **Emitter** MAR2432NX485Q Receiver	600 mm (23.62 in)	689 mm (27.1 in)	64	9.2 ms	4.8 ms	
MAE3032Q **Emitter** MAR3032NX485Q Receiver	752 mm (29.62 in)	841 mm (33.1 in)	80	11.5 ms	6.0 ms	
MAE3632Q **Emitter** MAR3632NX485Q Receiver	905 mm (35.62 in)	993 mm (39.1 in)	96	13.7 ms	7.1 ms	
MAE4232Q **Emitter** MAR4232NX485Q Receiver	1057 mm (41.62 in)	1146 mm (45.1 in)	112	16.0 ms	8.2 ms	
MAE4832Q **Emitter** MAR4832NX485Q Receiver	1210 mm (47.62 in)	1298 mm (51.1 in)	128	18.2 ms	9.4 ms	
MAE5432Q **Emitter** MAR5432NX485Q Receiver	1362 mm (53.62 in)	1451 mm (57.1 in)	144	20.4 ms	10.5 ms	
MAE6032Q **Emitter** MAR6032NX485Q Receiver	1514 mm (59.62 in)	1603 mm (63.1 in)	160	22.7 ms	11.6 ms	
MAE6632Q **Emitter** MAR6632NX485Q Receiver	1667 mm (65.62 in)	1755 mm (69.1 in)	176	24.9 ms	12.7 ms	
MAE7232Q **Emitter** MAR7232NX485Q Receiver	1819 mm (71.62 in)	1908 mm (75.1 in)	192	27.1 ms	13.9 ms	

[1] Worst-case response time is twice the scan time.

2 System Overview

The Banner A-GAGE MINI-ARRAY Two-Piece Measuring Light Screen incorporates the popular MINI-ARRAY emitter and receiver design and ease of use, while simplifying installation. This two-piece system does not require a separate controller.

A typical system consists of four components:

- Emitter
- Receiver
- Two interconnecting cables

Models are available in array lengths from 150 to 1830 mm in 150 mm increments (6 inches to 6 feet in 6 inch increments). Beam spacing is 9.5 mm (3/8 inch). Range is 6.1 m (20 feet).

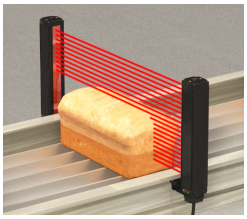

Figure 1. Typical Part Profiling Application

2.1 System Features

Built-in features simplify the operation of the MINI-ARRAY Two-Piece Light Screen system. Large optical lenses provide strong optical excess gain (needed for challenging environments).

The system is pre-configured for an interlaced optical pattern, which provides the smallest minimum object detection capability. A sensor scan involves individually enabling each emitter channel twice. In effect, each emitter channel fires at both its opposing receiver element, and at the one beneath it. The result is an interlaced optical detection pattern, as shown. This pattern can better detect objects within the middle third of the sensing area.

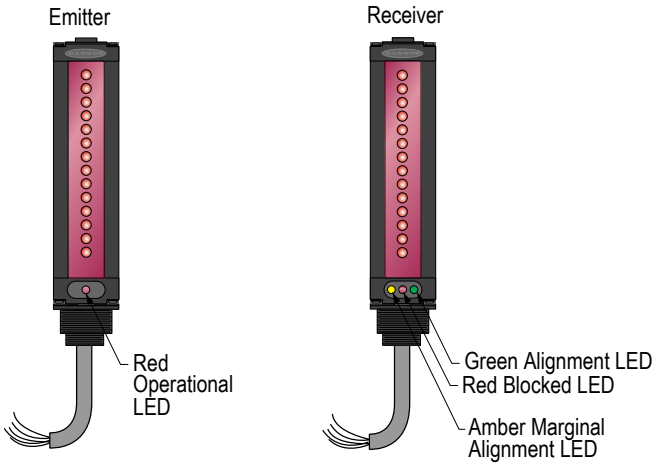

Figure 2. System Features

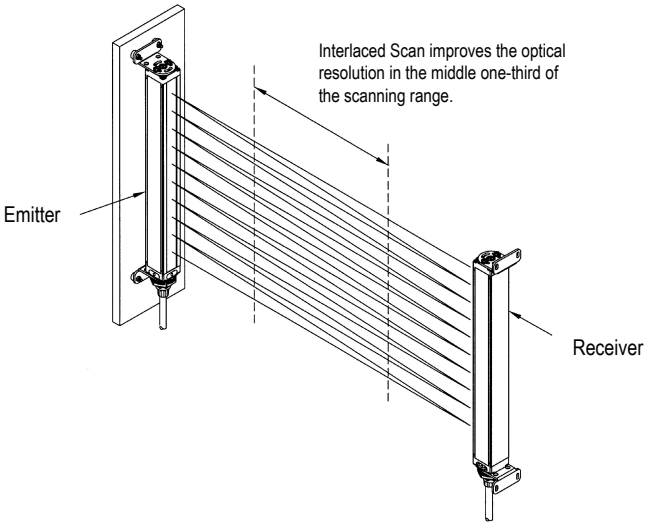

Figure 3. Interlaced Scan

2.2 Easy-to-Understand **Diagnostic** LEDs

The system provides simple, straightforward indications of sensor performance. See *Troubleshooting using the Diagnostic LEDs* on page 16 for a more detailed guide to troubleshooting system status using the diagnostic LEDs.

Table 1: Emitter: 1 Red Diagnostic LED

LED **Condition**	ON Solid	OFF	Flashing (5x per second)	Flashing (1x per second)
Emitter Condition	Sensor is functioning normally	No power to emitter	Receiver is removed from the system	One or more emitter optical channel(s) not working properly

Table 2: Receiver: 3 Diagnostic LEDs (Green, Red, and Amber)

The combined status of the Green and Red LEDs provides a simple sensor alignment process. The Amber LED signals a dirty lens or degraded sensor condition.

LED **Condition**	ON Solid	OFF	Flashing (2 Hz)
Green	Light screen is unobstructed	Light screen is obstructed	Non-functioning emitter
Red	Light screen is obstructed	Light screen is unobstructed	Non-functioning emitter
Amber	Dirty lens (whether light screen is blocked or clear); will remain ON until receiver detects proper light signal strength		Light signal of one of more beam(s) is degraded

2.3 Two Solid-State Outputs

The receiver has two discrete outputs (Output #1 and Output #2). Each output is independent and can be configured for either NPN or PNP operation. The sensor is factory-configured for complementary NPN outputs tracking the Total Beams Blocked measurement. These outputs are rated to 150 mA and are short circuit protected.

2.4 EIA-485 Interface

The receiver has a serial EIA-485 interface to provide sensor profiling and system status information. See *Serial Communication* on page 10 for additional information.

2.5 Sensing Scan Time

Sensing scan time is a function of the sensor length and number of beams interrogated (i.e. steps) per scan of the array. The models table provides scan times for straight and interlaced scanning application for each light screen size. The worst-case response time is twice the scan time.

2.6 Supplied System **Software**

The system provides other scanning modes and operation features, which are ideal for such applications as on-the-fly product sizing and profiling, edge-guiding and center-guiding, loop tensioning control, hole detection, parts counting, and similar uses.

These features are easily accessed via the Banner Sensors GUI software and an appropriate EIA-485 interface (consult a Banner Engineering representative for more information). The menu-driven program walks the user through the many scanning and output options. After the desired options are selected, download the settings to the receiver; the receiver will store the configuration settings in non-volatile memory.

This software also enables the user to check sensor alignment, obtain sensor readings, and verify sensor status. The built-in system diagnostics can be used to assess emitter and receiver hardware errors or dirty lens locations.

2.7 Part **Profiling Applications**

The MINI-ARRAY Two-Piece Light Screen features a superior interlaced (cross-hatched) beam pattern. Using interlaced scanning, profiling applications can achieve resolutions as small as 12.7mm (0.5 in).

2.8 System **Self-Diagnostics**

Output #2 can be configured for Alarm/Health Status, which enables advanced electronic and signal processing to allow the receiver to continually monitor and evaluate light signal quality and alert the user to light signal degradation or sensor faults. The sensor can detect marginal alignment, permanently blocked channels, a faulty emitter element, or a non-functioning emitter.

This receiver was designed to detect system failures and remain operational. Potential problems include a dirty lens that totally blocks (occludes) the optical light signal or a light signal failure (caused by either the emitter or receiver). Although sensor failures are rare, the Two-Piece MINI-ARRAY has been designed to continue to function while warning the user of fault conditions, minimizing system down time and providing advance notice that system maintenance or repairs are required.

Whenever the receiver detects proper operation, Output #2 is active (ON, a healthy condition). When the sensor detects a system problem (either a sensor fault or a degraded signal), Output #2 is disabled (turns OFF, an alarm condition).

A system problem is acknowledged in three ways:

1. The condition of the diagnostic LEDs.
2. Output #2 will be inactive (OFF), when Output #2 is configured for Alarm/Health Status.
3. The condition can be transmitted to the monitoring system, via the EIA-485 interface (see *Request Sensor to Transmit System Status Information (Command 0x66)* on page 11).

2.8.1 Marginal Alignment/Dirty Lens **Detection**

When the received light signal drops below a predetermined threshold, the receiver will recognize a marginal alignment or dirty lens condition. (The dirty lens threshold is equivalent to three times the minimum light signal necessary for detection.)

Once this condition is detected, the receiver will signal the user that the lens surface should be cleaned or re-aligned. The Amber diagnostic LED will turn ON until the condition is no longer detected (whether the light screen is blocked or clear). This advance recognition can be used to initiate a proper maintenance process. When Output #2 is configured for Alarm/Health Status, Output #2 will be inactive (OFF).

2.8.2 Fault **Detection** and Sensor **Degradation Operation**

The receiver detects an occluded light channel detected when one or two consecutive light channels remain blocked after eight or more vehicles are detected. Once a blocked channel is detected (the Amber diagnostic LED will flash at 2 hertz), the receiver will note the fault and begin to operate in sensor degradation mode. When Output #2 is configured for Alarm/Health Status, Output #2 will be inactive (OFF).

Once the receiver detects a permanently blocked optical channel, it will effectively ignore the degraded optical channel while continuing to operate. This allows the sensor to continue working and for many instances, provide reliable service.

Along with ignoring permanently blocked channels, the sensor continuously monitors sensor performance. Should an optical channel become inoperable (due to a faulty light channel), the sensor will detect the problem and begin to operate in the sensor degradation mode. Sensor degradation mode provides the user with advance notice of a fault while continuing to maintain a functional traffic lane.

Emitter faults: In addition to sensing a permanently blocked channel and a faulty light channel, the receiver can detect a non-functioning emitter (possibly caused by a disconnected cable). The receiver's Green and Red diagnostic LEDs will flash at 2 hertz to signal this emitter condition.

3 Installation

3.1 Emitter and Receiver Mounting

Banner MINI-ARRAY emitters and receivers are small, lightweight, and easy to mount; the mounting brackets (supplied) allow ±30 degrees rotation.

From a common point of reference, make measurements to position the emitter and receiver in the same plane with their midpoints directly opposite each other. Mount the emitter and receiver brackets using the M4 x 0.7 x 14 mm bolts and associated mounting hardware (all supplied).

Although the internal circuitry of the emitter and receiver can withstand heavy impulse forces, vibration isolators can be used instead of the M4 bolts to dampen impulse forces and prevent possible damage from resonant vibration of the emitter or receiver assembly. Two different Anti-Vibration Mounting Kits are available from Banner. See *Accessories* on page 17.

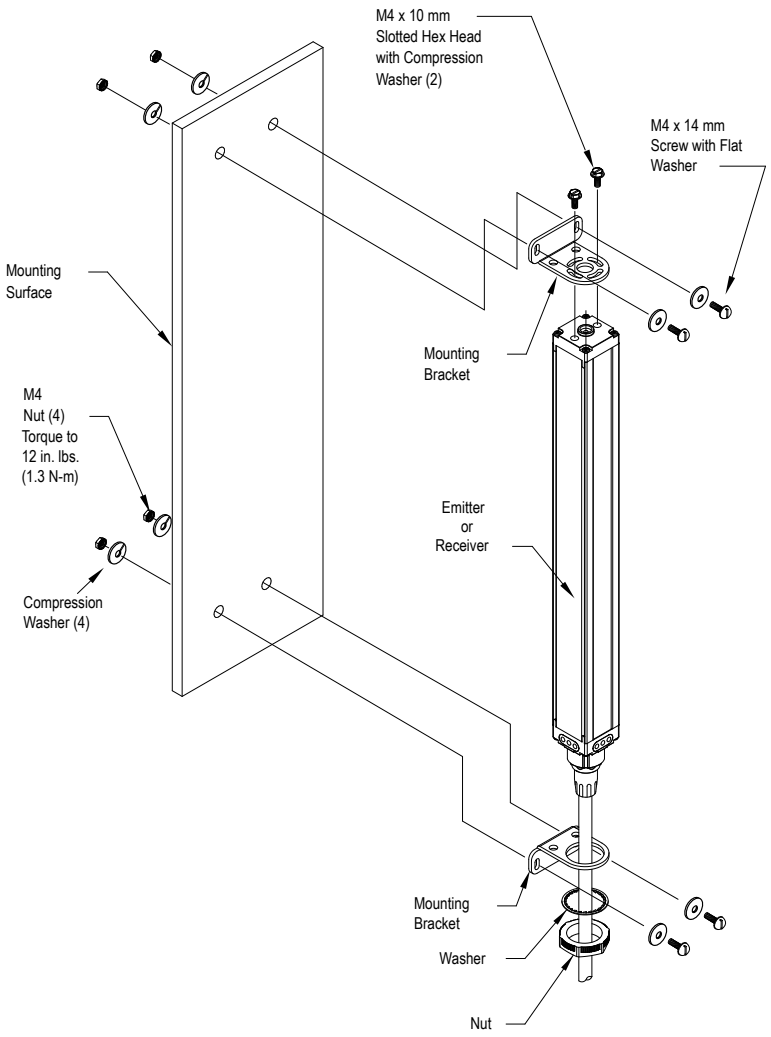

Figure 4. MINI-ARRAY emitter and receiver mounting hardware

1. Mount the emitter and receiver in their mounting brackets (see *Figure 4* on page 7).
2. Position the red lenses of the two units directly facing each other. The connector ends of both sensors must point in the same direction.
3. Measure from one or more reference planes (that is, the floor) to the same points on the emitter and receiver to verify their mechanical alignment. If the sensors are positioned exactly vertical or exactly horizontal, a carpenter's level may be useful for checking alignment. Extending a straight-edge or a string between the sensors may help with positioning.
4. Also check by eye for line-of-sight alignment.
5. Make any necessary final mechanical adjustments, and hand-tighten the bracket hardware.
6. Prepare the cables: The "drain wire" is the uninsulated stranded wire which runs between the cable jacket and the foil shield. Remove the foil shield at the point where the wires exit the cable.

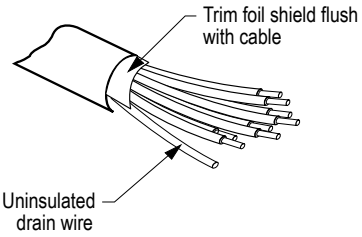

Figure 5. Emitter/Receiver Cable Preparation

7. Connect the shielded cables to the emitter and receiver. Follow the local wiring code for low-voltage dc control cables. The same cable type is used for both emitter and receiver (two cables required per system).
8. Route the cables to the terminal location.

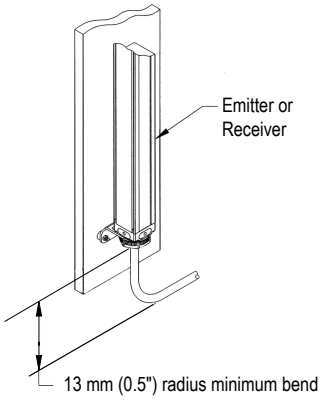

Figure 6. Cable Clearances

9. Cut the cables to length after making sure they are routed properly.

3.2 Center Bracket **Mounting**

Center mounting brackets must be used with long sensors, if they are subject to shock or vibration. The sensors are designed to be mounted with up to 900 mm unsupported distance (between brackets). Sensors 1050 mm and longer must use a center mounting bracket with the standard end-cap brackets.

1. Attach the center bracket to the mounting surface and use the shim plates with the end-cap brackets to make a flush mounting.
2. Attach the clamp loosely to the housing, using the included M5 screws and T-nuts.
3. After the sensor is mounted to the end-cap brackets, attach the clamp to the center bracket using a supplied M5 screw and tighten down the clamp to the sensor housing.

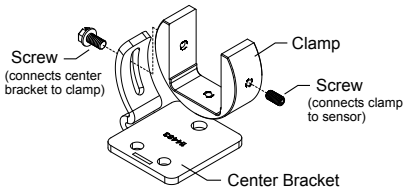

Figure 8. MINI-ARRAY center bracket mounting hardware

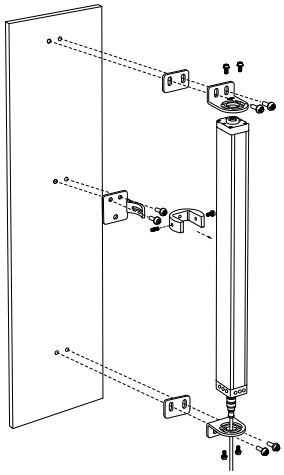

Figure 7. MINI-Array center bracket mounting

3.3 **Emitter** and Receiver Wiring

Connect the emitter and receiver cables as shown.

Receiver Output 1: (OUT1) is an open-collector NPN transistor switch rated at 30 V dc max., 150 mA max. It is protected against overload and short circuits.

Receiver Alarm: (ALARM) is an open-collector NPN transistor switch rated at 30 V dc max., 150 mA max. It is protected against overload and short circuits.

Both outputs are current sinking.

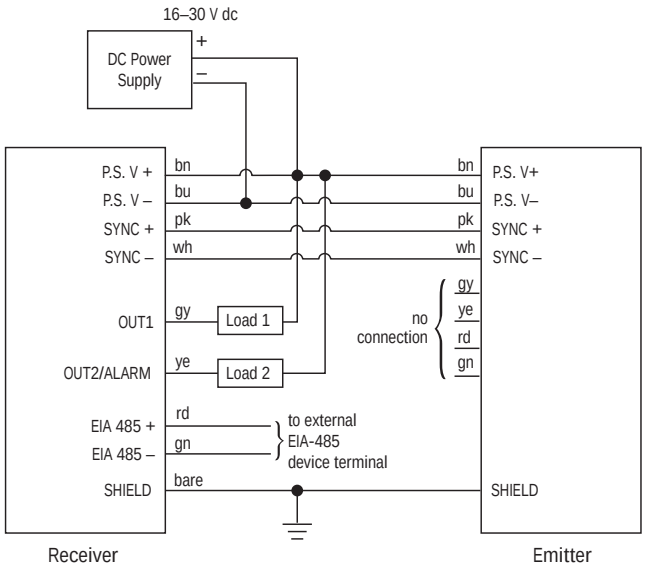

3.4 **Optical** Alignment

1. After the cables are connected, apply 16 to 30 V dc power to the sensor.
2. Rotate the emitter and/or receiver as necessary to align them.
   When aligned, the receiver green LED is On.
3. Align the emitter and receiver until the receiver's green LED is On and the amber and red LED are Off.

4 Serial **Communication**

This section describes the serial communication data format and commands that are available to serially communicate over the EIA-485 interface. Use the serial commands to initiate scanning, request sensor light channel information, request system status, and request one or two sensor measurements. The serial communication data format utilized by the sensor is described and related to the sensor commands; examples follow.

4.1 Serial **Communication** Data Format

The serial communication utilizes a standard universal asynchronous receiver/transmitter architecture. The sensor baud rate can be 9600, 19200, or 38400. The data will have one start bit, one stop bit, no parity, eight data bits and is transmitted least significant bit first. The serial communication string format will consist of a start-of-header byte, a sensor-identification byte, a command byte, a count of the data bytes, the data bytes, and a two-byte check sum.

All serial communication will follow this data format. The start-of-header byte

will always have hexadecimal value 0xF4 (244 decimal). The sensor identification byte can have hexadecimal values ranging from 0x41 through 0x5A (65 through 90 decimal). The command bytes used for the sensor are listed in the following table:

Command Value (Hexadecimal)	Command **Description**
0×53	Request Sensor to Scan
0×64	Request Sensor to Transmit Each Optical Channel State (0-clear, 1-blocked)
0×66	Request Sensor to Transmit System Status Information
0×67	Request Sensor to Transmit One or Two Measurement Values

The count of the data bytes defines the number of data bytes that will be transmitted for the particular command. For instance, if four data bytes are transmitted, then the value for the number of data bytes will equal four. The actual data bytes follow the byte representing the number of data bytes. The check sum is a two-byte value that is calculated by summing the previous bytes in the string. Once the sum is known, then a ones complement of the sum is calculated and used as the string check sum value. Examples will be given in the description of each command.

4.2 Request Sensor to Scan Command (Command 0×53)

This command will be used when the sensor is configured for host scanning. This command is useful for instances where multiple sensors are present and sensor cross talk is an issue. Assuming the sensor ID is 0×41, the command string would be as follows:

Transmit string to sensor: 0×F4, 0×41, 0×53, 0×00, 0×77, 0×FE

Receive string from sensor: 0×F4, 0×41, 0×53, 0×01, 0×06, 0×70, 0×FE

This receive string would be interpreted as follows:

0×F4 is the start-of-header byte
0×41 is the sensor-identification byte
0×53 is the command requesting the sensor scan initiation
0×01 is the number of data bytes
0×06 is the valid response stating that the sensor initiated a scan

The last two bytes are the check sum in low-byte, high-byte order and calculated as follows:

0×F4 + 0×41 + 0×53 + 0×01 + 0×06 = 0×18F.
The ones complement of 0×18F = 0×FE70.
Hence the low-byte, high-byte order would be 0×70, 0×FE.

4.3 Request Sensor to Transmit all Receiver Channel State (Command 0x64)

This command requests the sensor to provide the state of each optical channel. The two states for each optical channel are clear (value =0) and blocked (value =1). Eight optical channels of information are transmitted in each data byte. The first data byte contains the information for the eight optical channels located closest to the sensor cable end cap. The following data bytes will contain information for eight successive optical channel sections. For a data byte, each bit of the data byte is directly related to the status of an individual optical channel. For example, if the first eight optical channels have the following states:

Optical Channel **Position**	Status	Binary Value		**Optical** Channel **Position**	Status	Binary Value
1	blocked	1		5	clear	0
2	clear	0		6	blocked	1

Optical Channel **Position**	Status	Binary Value		**Optical** Channel **Position**	Status	Binary Value
3	blocked	1		7	clear	0
4	blocked	1		8	clear	0

Then the data byte would be 0x2D. If the array has 32 optical channels, then there would be four data bytes representing the status of all 32 optical channels. Assume that the sensor ID is 0x41 and the following serial transmission occurs:

Transmit string to sensor: 0xF4, 0x41, 0x64, 0x00, 0x66, 0xFE

Receive string from sensor: 0xF4, 0x41, 0x64, 0x04, 0x2D, 0x03, 0xC0, 0x81, 0xF1, 0xFC

This receive string would be interpreted as follows:

0xF4 is the start-of-header byte
0x41 is the sensor-identification byte
0x64 is the command requesting the sensor optical channel information
0x04 is the number of data bytes
0x2D optical channels 1, 3, 4, 6 are blocked; optical channels 2, 5, 7, 8 are clear
0x03 optical channels 9 and 10 are blocked; optical channels 11-16 are clear
0xC0 optical channels 17-22 are clear; optical channels 23 and 24 are blocked
0x81 optical channels 25 and 32 are blocked; optical channels 26-31 are clear
The last two bytes are the check sum in low-byte, high-byte order

4.4 Request Sensor to Transmit System Status **Information** (Command 0x66)

Use this command to extract information about the sensor. The information that can be received includes the following six data bytes:

- Number of Emitter Channels
- First Emitter Failed Channel
- Number of Receiver Channels
- First Bad Receiver Channel
- State
  - 0—System is working properly
  - 1—System detects weak alignment
  - 2—System detects dirty lens
  - 3—System detects degraded emitter (faulty emitter element)
  - 4—System detects emitter is not functioning
- Degraded Channel

Assume that the system has 48 channels and the system detects weak alignment. The transmit and receiver strings would be as follows:

Transmit string to sensor: 0xF4, 0x41, 0x66, 0x00, 0x64, 0xFE

Receive string from sensor: 0xF4, 0x41, 0x66, 0x06, 0x30, 0x00, 0x30, 0x00, 0x01, 0x00, 0xFD, 0xFD

This receive string would be interpreted as follows:

0xF4 is the start-of-header byte
0x41 is the sensor-identification byte
0x66 is the command requesting the sensor status information
0x06 is the number of data bytes
0x30 there are 48 emitter channels
0x00 all emitter channels are OK
0x30 there are 48 receiver channels (that's good, because the emitter has 48 channels also!)
0x00 all receiver channels are OK
0x01 the system detects weak alignment
0x00 there are no degraded channels
The last two bytes are the check sum in low-byte, high-byte order.

4.5 Request Sensor to Transmit One or Two Measurement Values (Command 0x67)

This command requests the sensor to transmit the previous scan's measurement values (one or two measurement values). The command will transmit either two or four bytes (as specified by the sensor configuration). Assume that the sensor ID is 0x41 and the sensor is configured to transmit the First Beam Blocked and Total Beams Blocked information. Also assume that the twentieth light channel happens to be the first beam blocked and a total of 15 light channels are blocked.

Transmit string to sensor: 0xF4, 0x41, 0x67, 0x00, 0x63, 0xFE

Receive string from sensor: 0xF4, 0x41, 0x67, 0x04, 0x14, 0x00, 0x0F, 0x00, 0x3C, 0xFE

This receive string would be interpreted as follows:

0xF4 is the start-of-header byte
0x41 is the sensor-identification byte
0x67 is the command requesting the sensor measurement information
0x04 is the number of data bytes
0x14, 0x00 is the low-byte, high-byte integer value for the first beam blocked = 20
0x0f, 0x00 is the low-byte, high-byte integer value for the total beams blocked=15

The last two bytes are the check sum in low-byte, high-byte order. The check sum is calculated as follows:

0xF4 + 0x41 + 0x67 + 0x04 + 0x14 + 0x00 + 0x0F + 0x00 = 0x1C3.
The ones complement of 0x1C3 = 0xFE3C.
Hence the low-byte, high-byte order would be 0x3C, 0xFE.

5 Specifications

Supply Voltage and Power
16 V dc to 30 V dc; maximum power 12 watts

Supply **Protection** Circuitry
Protected against reverse polarity and transient voltages

Discrete Output **Configuration**
Two discrete outputs: Output 1 and Output 2
Outputs can be configured as either open collector NPN or PNP transistors. The outputs are factory configured as NPN outputs.

Discrete Output (either NPN or PNP) **Ratings**
Rated at 30 V dc max, 150 mA max load, short circuit protected
OFF-State Leakage Current: < 10 µA at 30 V dc
ON-State Saturation Voltage: < 1 V dc at 10 mA, < 1.5 V dc at 150 mA

Serial Data Outputs
EIA-485 interface
Baud rate 9600, 19.2 K, 38.4 K
8 data bits, 1 start bit, 1 stop bit, no parity

Controller Programming
Via EIA-485 to Banner Sensors GUI software

Emitter/Receiver Range
Sensors < 1220 mm (4 ft) long: 6.1 m (20 ft)
Sensors ≥ 1220 mm (4 ft) long: 4.6 m (15 ft)

Minimum Object **Sensitivity**
Interlaced Mode: 12.7 mm (0.5 in) [2], [3]
Other Scan Modes: 19.1 mm (0.75 in)[3]

Sensor Scan Time
Worst-case response time is twice the scan time

Cable **Connections**
Emitter and receiver cables may not exceed 80 m (250 ft) each
150 mm (6.5 inch) PVC cable with M12/Euro-style quick disconnect
Quick disconnect cordsets available separately

Status Indicators
Emitter: Red LED lights for proper operation
Receiver: Green – sensors aligned (> 3x excess gain); Amber – marginal alignment (1x-3x excess gain); Red – sensors misaligned or beam(s) blocked

Environmental **Rating**
NEMA 4, 13
IEC IP65
UL Type 1 enclosure

Construction
Aluminum housing with black anodized finish; acrylic lens cover

Operating Conditions
Temperature: –40 °C to +70 °C (–40 °F to +158 °F)
95% maximum relative humidity (non-condensing)

Application Notes
The emitter and receiver sync lines (pink and white wires) will be damaged if connected to the power supply
The receiver EIA-485 interface (red and green wires) will be damaged if connected to the power supply

Certifications

5.1 Dimensions

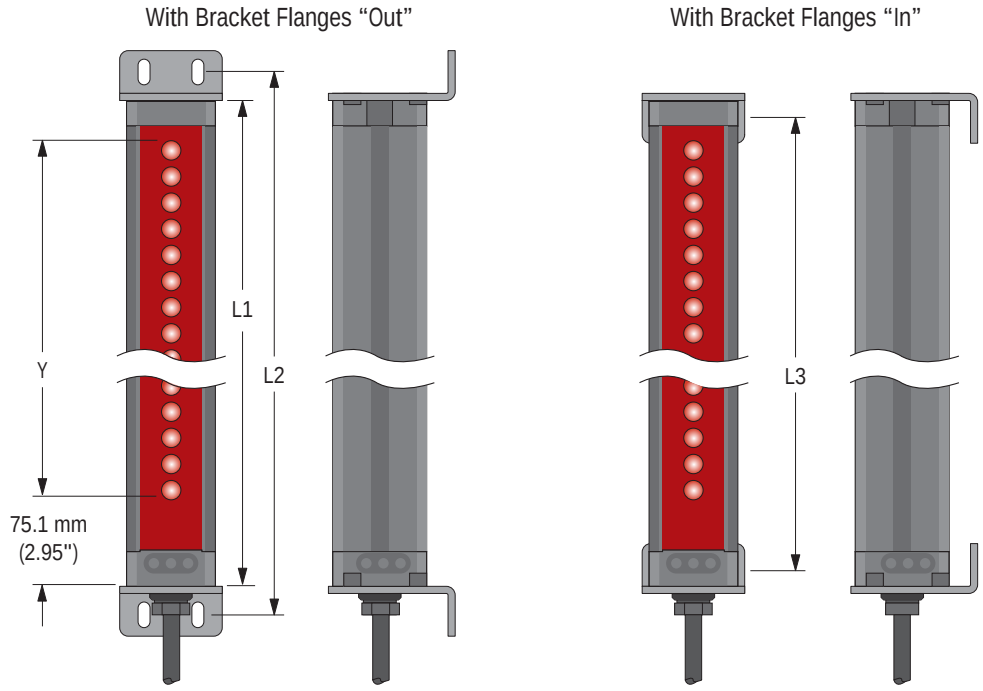

[2] Assumes sensing is in middle one-third of scanning range.
[3] Requires minimum separation of emitter/receiver of 0.9 m (3 ft).

Emitter/Receiver Models	Housing Length (L1)	Distance Between Bracket Holes	
		L2	L3
MAE632Q **Emitter** MAR632NX485Q Receiver	231 mm (9.1 in)	262 mm (10.3 in)	205 mm (8.1 in)
MAE1232Q **Emitter** MAR1232NX485Q Receiver	384 mm (15.1 in)	414 mm (16.3 in)	357 mm (14.1 in)
MAE1832Q **Emitter** MAR1832NX485Q Receiver	536 mm (21.1 in)	567 mm (22.3 in)	510 mm (20.1 in)
MAE2432Q **Emitter** MAR2432NX485Q Receiver	689 mm (27.1 in)	719 mm (28.3 in)	662 mm (26.1 in)
MAE3032Q **Emitter** MAR3032NX485Q Receiver	841 mm (33.1 in)	871 mm (34.3 in)	815 mm (32.1 in)
MAE3632Q **Emitter** MAR3632NX485Q Receiver	993 mm (39.1 in)	1024 mm (40.3 in)	967 mm (38.1 in)
MAE4232Q **Emitter** MAR4232NX485Q Receiver	1146 mm (45.1 in)	1176 mm (46.3 in)	1119 mm (44.1 in)
MAE4832Q **Emitter** MAR4832NX485Q Receiver	1298 mm (51.1 in)	1329 mm (52.3 in)	1272 mm (50.1 in)
MAE5432Q **Emitter** MAR5432NX485Q Receiver	1451 mm (57.1 in)	1481 mm (58.3 in)	1424 mm (56.1 in)
MAE6032Q **Emitter** MAR6032NX485Q Receiver	1603 mm (63.1 in)	1633 mm (64.3 in)	1577 mm (62.1 in)
MAE6632Q **Emitter** MAR6632NX485Q Receiver	1755 mm (69.1 in)	1786 mm (70.3 in)	1729 mm (68.1 in)
MAE7232Q **Emitter** MAR7232NX485Q Receiver	1908 mm (75.1 in)	1938 mm (76.3 in)	1881 mm (74.1 in)

5.2 **Emitter** and Receiver **Mounting** Bracket Dimensions

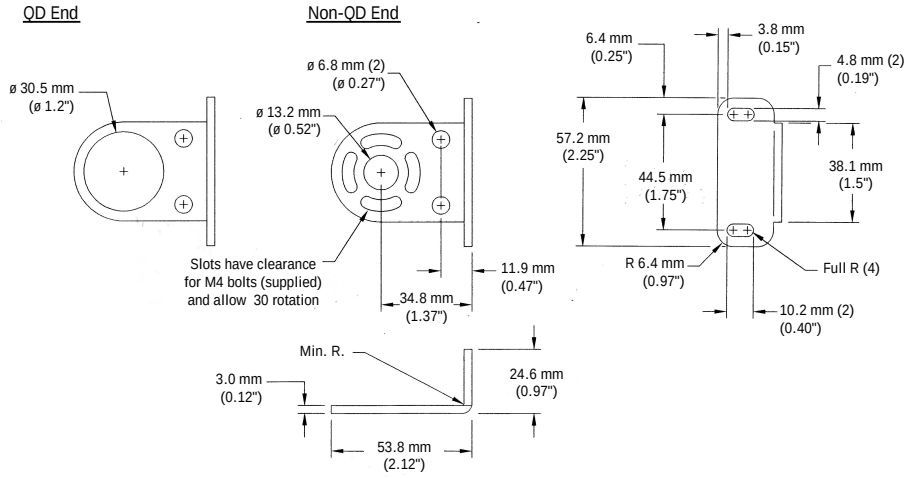

6 **Troubleshooting** using the **Diagnostic** LEDs

The emitter has a single Red status LED. The receiver's three LEDs (Green, Amber, and Red) are used in combination to diagnose system status.

Receiver LED **Condition**			System Status	Possible **Action**
Green	Amber	Red		
ON	OFF	OFF	Emitter/receiver pair aligned	None
ON	ON	OFF	Emitter/receiver pair aligned with dirty lens	• Clean lenses • Align emitter and receiver
OFF	OFF	ON	Emitter/receiver pair blocked	None
OFF	ON	ON	Emitter/receiver pair blocked with dirty lens	• Clean lenses • Align emitter and receiver
ON	ON	ON	Receiver error	Replace receiver
ON	Flashing at 2 Hz	OFF	Degraded mode; emitter/receiver pair aligned	• Clean lenses • Align emitter and receiver[4]
OFF	Flashing at 2 Hz	ON	Degraded mode; emitter/receiver pair blocked	• Clean lenses • Align emitter and receiver[4]
Flashing at 2 Hz	OFF	Flashing at 2 Hz	Emitter is not functioning	Connect emitter

[4] If after cleaning the emitter and receiver lenses, the emitter diagnostic is solid Red, consider replacing the receiver.

7 Accessories

7.1 Cordsets

8-Pin Threaded M12/Euro-Style Cordsets with Shield					
Model	Length	Style	Dimensions	Pinout (Female)	
MAQDC-806	1.83 m (6 ft)	Straight	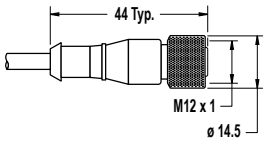	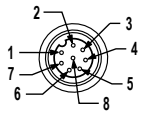	
MAQDC-815	4.58 m (15 ft)				
MAQDC-830	9.14 m (30 ft)				
MAQDC-850	15.2 m (50 ft)			1 = White 2 = Brown 3 = Green 4 = Yellow	5 = Gray 6 = Pink 7 = Blue 8 = Red

Note: Additional lengths available: MAQDC-875 22 m (75 ft), MAQDC-8100 30 m (100 ft), MAQDC-8125 38 m (125 ft), MAQDC-8150 46 m (150 ft).

7.2 **Anti-Vibration Mounting** Kits

MSVM-1
- 4 anti-vibration mounts (M4 x 0.7 x 9.5 mm)
- 8 M4 Keps nuts
- These mounts are made from BUNA-N rubber and are more resistant to chemicals and oils.

MAVM-1
- 4 anti-vibration mounts (M4 x 0.7 x 9.5 mm)
- 8 M4 Keps nuts
- These mounts are made from natural rubber, which are less chemically resistant than the MSVM-1 mounts, but have a greater sheer force spec at higher temperature.

7.3 Center **Mounting** Bracket Kit

EZA-MBK-12-CB
- Includes one center bracket and hardware to mount to MSA Series stands
- Includes 2 shim plates for standard end-cap brackets to allow flush mounting
- M5 mounting hardware

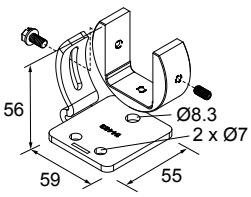

8 Contact Us

Corporate Headquarters

Address:
Banner Engineering Corporate
9714 Tenth Avenue North
Minneapolis, Minnesota 55441, USA

Phone: +1 763 544 3164
Website: *www.bannerengineering.com*

Europe

Address:
Banner Engineering EMEA
Park Lane Culliganlaan 2F
Diegem B-1831, Belgium

Phone: +32 (0)2 456 0780
Website: *www.bannerengineering.com/eu*
Email: mail@bannerengineering.com

Turkey

Address:
Banner Engineering Turkey
Barbaros Mah. Uphill Court Towers A Blok D:49
34746 Batı Ataşehir Istanbul Türkiye

Phone: +90 216 688 8282
Website: *www.bannerengineering.com.tr*
Email: turkey@bannerengineering.com.tr

India

Address:
Banner Engineering India Pune Head Quarters
Office No. 1001, 10th Floor Sai Capital, Opp. ICC Senapati Bapat Road
Pune 411016, India

Phone: +91 (0) 206 640 5624
Website: *www.bannerengineering.co.in*
Email: salesindia@bannerengineering.com

Mexico

Address:
Banner Engineering de Mexico Monterrey Head Office
Edificio VAO Av. David Alfaro Siqueiros No.103 Col. Valle Oriente C.P.66269
San Pedro Garza Garcia, Nuevo Leon, Mexico

Phone: +52 81 8363 2714 or 01 800 BANNERE (toll free)
Website: *www.bannerengineering.com.mx*
Email: mexico@bannerengineering.com

Brazil

Address:
Banner do Brasil
Rua Barão de Teffé nº 1000, sala 54
Campos Elíseos, Jundiaí - SP, CEP.: 13208-761, Brasil

Phone: +1 763 544 3164
Website: *www.bannerengineering.com.br*
Email: brasil@bannerengineering.com

China

Address:
Banner Engineering Shanghai Rep Office
Xinlian Scientific Research Building Level 12, Building 2
1535 Hongmei Road, Shanghai 200233, China

Phone: +86 212 422 6888
Website: *www.bannerengineering.com.cn*
Email: sensors@bannerengineering.com.cn

Japan

Address:
Banner Engineering Japan
Cent-Urban Building 305 3-23-15 Nishi-Nakajima Yodogawa-Ku
Osaka 532-0011, Japan

Phone: +81 (0)6 6309 0411
Website: *www.bannerengineering.co.jp*
Email: mail@bannerengineering.co.jp

Taiwan

Address:
Banner Engineering Taiwan
8F-2, No. 308 Section 1, Neihu Road
Taipei 114, Taiwan

Phone: +886 (0)2 8751 9966
Website: *www.bannerengineering.com.tw*
Email: info@bannerengineering.com.tw

9 Banner Engineering Corp. Limited Warranty

Banner Engineering Corp. warrants its products to be free from defects in material and workmanship for one year following the date of shipment. Banner Engineering Corp. will repair or replace, free of charge, any product of its manufacture which, at the time it is returned to the factory, is found to have been defective during the warranty period. This warranty does not cover damage or liability for misuse, abuse, or the improper application or installation of the Banner product.

THIS LIMITED WARRANTY IS EXCLUSIVE AND IN LIEU OF ALL OTHER WARRANTIES WHETHER EXPRESS OR IMPLIED (INCLUDING, WITHOUT LIMITATION, ANY WARRANTY OF MERCHANTABILITY OR FITNESS FOR A PARTICULAR PURPOSE), AND WHETHER ARISING UNDER COURSE OF PERFORMANCE, COURSE OF DEALING OR TRADE USAGE.

This Warranty is exclusive and limited to repair or, at the discretion of Banner Engineering Corp., replacement. IN NO EVENT SHALL BANNER ENGINEERING CORP. BE LIABLE TO BUYER OR ANY OTHER PERSON OR ENTITY FOR ANY EXTRA COSTS, EXPENSES, LOSSES, LOSS OF PROFITS, OR ANY INCIDENTAL, CONSEQUENTIAL OR SPECIAL DAMAGES RESULTING FROM ANY PRODUCT DEFECT OR FROM THE USE OR INABILITY TO USE THE PRODUCT, WHETHER ARISING IN CONTRACT OR WARRANTY, STATUTE, TORT, STRICT LIABILITY, NEGLIGENCE, OR OTHERWISE.

Banner Engineering Corp. reserves the right to change, modify or improve the design of the product without assuming any obligations or liabilities relating to any product previously manufactured by Banner Engineering Corp. Any misuse, abuse, or improper application or installation of this product or use of the product for personal protection applications when the product is identified as not intended for such purposes will void the product warranty. Any modifications to this product without prior express approval by Banner Engineering Corp will void the product warranties. All specifications published in this document are subject to change; Banner reserves the right to modify product specifications or update documentation at any time. Specifications and product information in English supersede that which is provided in any other language. For the most recent version of any documentation, refer to: *www.bannerengineering.com*.