IC70-16P-K In-Cabinet IO-Link Hub Product Manual

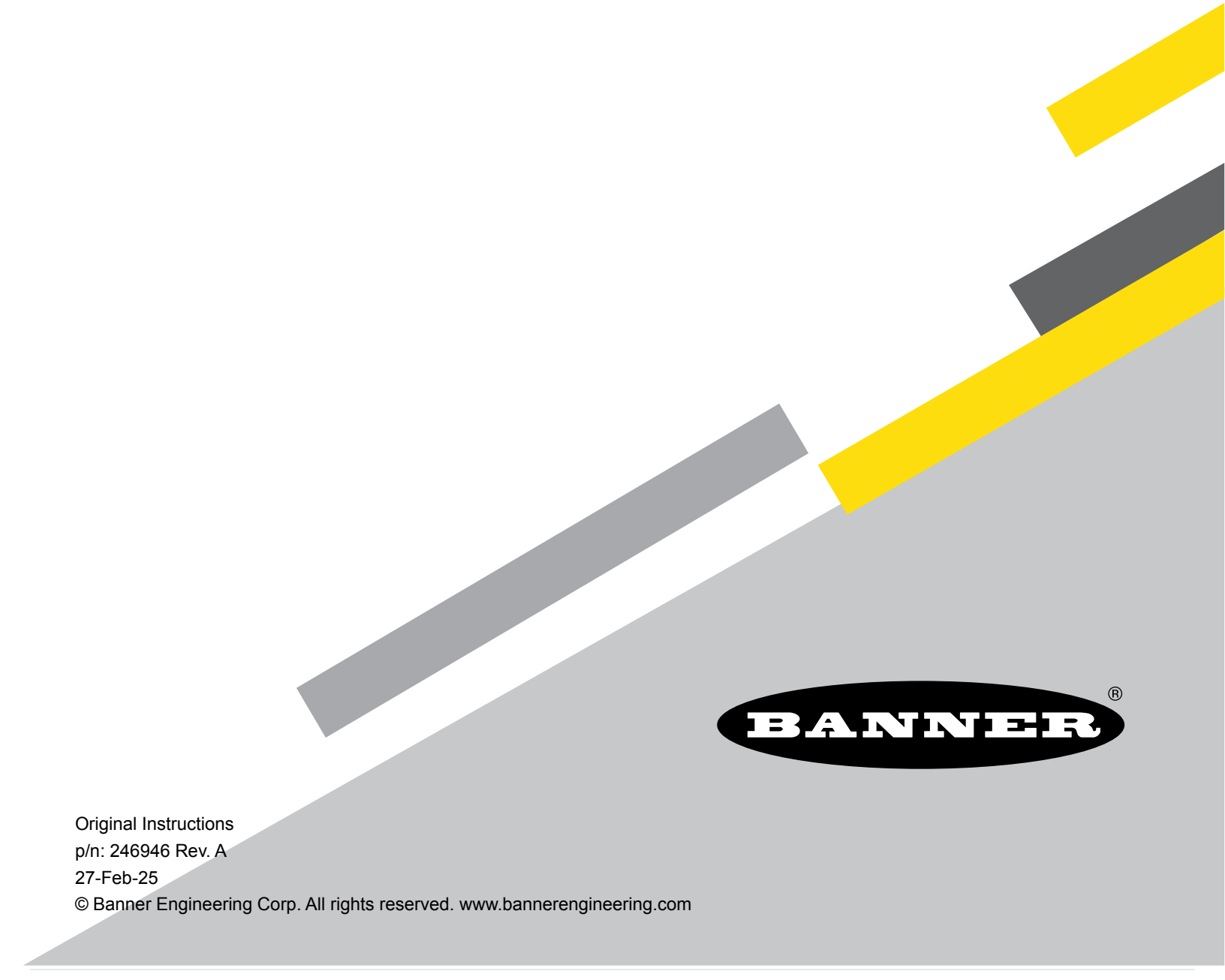

Original Instructions
p/n: 246946 Rev. A
27-Feb-25
© Banner Engineering Corp. All rights reserved. www.bannerengineering.com

ПРОМЭЛЕКТРОНИКА/ sales@prom-elec.com

Contents

Chapter 1 Features 3
Models 3
Overview 3

Chapter 2 Configuration 4
IO-Link® 4

Chapter 3 Mechanical Installation 5
Wiring 5

Chapter 4 Operating Instructions 7
Status Indicators 7

Chapter 5 IO-Link Data Reference Guide 8
Communication Parameters 8
Process Data In (Device to Master) 8
Process Data Out (Master to Device) 9
Parameters Set Using IO-Link 10
IO-Link Events 19

Chapter 6 Specifications 20
FCC Part 15 Class B for Unintentional Radiators 20
Industry Canada ICES-003(B) 20
Dimensions 21

Chapter 7 Accessories 22
IC70 Cordsets 22

Chapter 8 Product Support and Maintenance 24
Resources 24
Repairs 24
Contact Us 24
Banner Engineering Corp Limited Warranty 24

© Banner Engineering Corp. All rights reserved. www.bannerengineering.com

Chapter Contents

Models 3
Overview 3

Chapter 1 Features

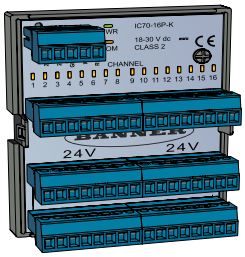

IO-Link hubs are a quick, easy, and economical way to integrate non-IO-Link devices into an IO-Link system

- Compact, rugged, and lightweight IP20 IO-Link hub
- Metal screw terminal connectors
- 16 PNP discrete channels can be configured as inputs or outputs
- DIN rail mountable hub base for easy control cabinet installation
- Compact IO-Link hub connects discrete inputs as Process Data In and outputs a discrete value as Process Data Out
- Enabled delay modes: ON/OFF Delay, ON/OFF One-shot, ON/OFF/Retriggerable Oneshot, and ON/OFF Pulse-stretcher and Totalizer
- Measurement metrics: Count, Events Per Minute (EPM), and Duration
- Discrete Mirroring: Discrete signals (in/out) from all 16 channels can be mirrored to any of the 16 channels, discrete out

Models

Model	Function	Type	Control	Connector
IC70-16P-K	Converter	16 PNP input/output channels	IO-Link	Metal screw terminals

Overview

Banner Engineering's IC70-16P-K In-Cabinet IO-Link Hub provides a compact, affordable, and lightweight solution for consolidating discrete signals from sensors and actuators, making it easy to connect these devices to an IO-Link master.

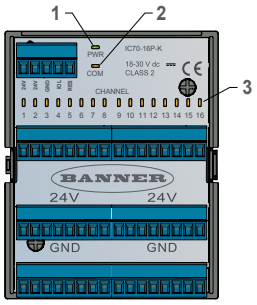

The hub's compact design and DIN-rail mountable base make it an excellent solution for mounting within control cabinets. Two 24 V DC power supply screw terminals are connected internally to the 24 V DC rail, allowing you to use multiple 24 V DC sources if needed or supply power to a nearby device.

The IC70-16P-K In-Cabinet IO-Link Hub connects 16 PNP inputs as Process Data In and 16 PNP outputs as Process Data Out. Use an IO-Link master device to monitor and configure the I/O channels.

1. Power LED
2. COM LED
3. Sixteen I/O channel LEDs

© Banner Engineering Corp. All rights reserved.
www.bannerengineering.com

Chapter Contents

IO-Link® 4

Chapter 2 Configuration

For more information, see the "IO-Link Data Reference Guide" on page 8 chapter (also a standalone document p/n 247609) and the IODD file (p/n).

Measurements

Channels 1-16 Description	IO Metric	Description
Channels 1-16	Count Value	Running count of the received input pulses
	Duration Value	Duration of the last input pulse in µs with 500 µs granularity
	Events per Minute Value	Running count of the number of pulses received averaged over one minute Range: 1 to 37,500
	Reset Metrics	Do not reset Reset

Channel Configuration – Input

Channels 1-16 Description	Name	Values
Channels 1-16	Discrete I/O Selection	PNP Input PNP Output with Pull-Down
	Discrete Delay Mode	Disabled On/Off Delay On One-shot Off One-shot On Pulse-stretcher Off Pulse-stretcher Totalizer Retriggerable On One-shot Retriggerable Off One-shot
	Discrete Delay Timer 1	Discrete On Delay, One-shot, Pulse-Stretcher Time, or Totalizer Count
	Discrete Delay Timer 2	Discrete Off Delay or Totalizer Time
	Mirroring Enable	Disabled Enabled
	Mirroring Channel Selection	Channel 1 through 16
	Mirroring Inversion	Not Inverted Inverted

IO-Link®

IO-Link® is a point-to-point communication link between a master device and a sensor and/or light. It can be used to automatically parameterize sensors or lights and to transmit process data. For the latest IO-Link protocol and specifications, please visit www.io-link.com.

For the latest IODD files, please refer to the Banner Engineering Corp website at: www.bannerengineering.com.

© Banner Engineering Corp. All rights reserved.
www.bannerengineering.com

Chapter Contents

Wiring 5

Chapter 3 Mechanical Installation

Install the IC70 to allow access for functional checks, maintenance, and service or replacement.

Do not exceed the operating specifications for reliable operation. The enclosure must provide adequate heat dissipation so that the air closely surrounding the IC70 does not exceed its maximum operating temperature.

The IC70 mounts to a standard 35 mm DIN-rail track. It must be installed inside an enclosure rated NEMA 3 (IEC IP54) or better.

To mount the IC70:

1. Tilt the top of the module slightly backward and place it on the DIN rail.
2. Straighten the module against the rail.
3. Lower the module onto the rail.

To remove the IC70

1. Push up on the bottom of the module.
2. Tilt the top of the module slightly forward.
3. Lower the module after the top rigid clip is clear of the DIN rail.

Wiring

Power supply screw terminals

Power Supply Screw Terminals	Terminals	Description
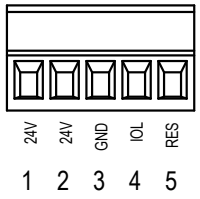	1	18 to 30 V DC
	2	18 to 30 V DC
	3	Ground
	4	IO-Link
	5	Not used/no connection

Input/output screw terminals

I/O Channel Screw Terminals	Terminals	Description
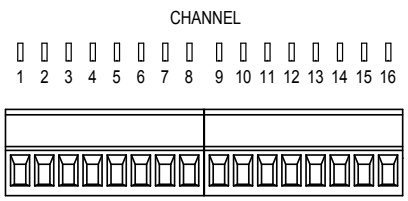	1	I/O Channel 1
	2	I/O Channel 2
	3	I/O Channel 3
	...	...
	16	I/O Channel 16

© Banner Engineering Corp. All rights reserved.
www.bannerengineering.com

I/O Channels

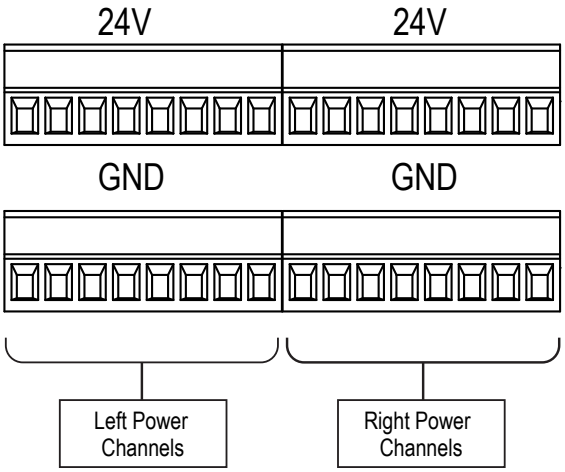

The left and right power channels are tied internally to screw terminals 1–3 on the power supply screw terminals.

© Banner Engineering Corp. All rights reserved.
www.bannerengineering.com

Chapter Contents

Status Indicators 7

Chapter 4 Operating Instructions

Status Indicators

The IC70-16P-K In-Cabinet IO-Link Hub has 16 amber LEDs to indicate discrete I/O status. There is also an additional amber LED specific to the IO-Link communications and a green power indication LED.

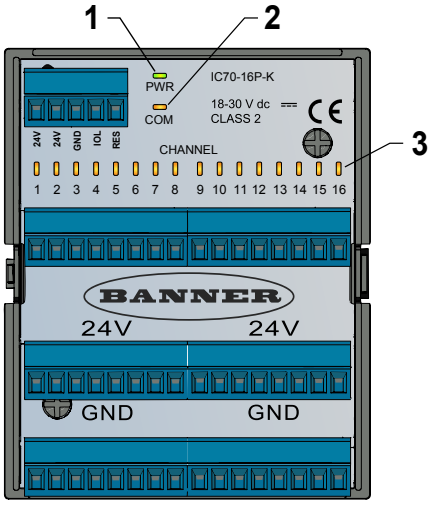

LED	Indication	Status
Discrete Device Amber LEDs (3)	Off	Discrete In and Out are inactive
	Solid Amber	Discrete In or Out is active
IO-Link Communication Amber LED (2)	Off	IO-Link communications are not present
	Flashing Amber (900 ms On, 100 ms Off)	IO-Link communications are active
Power Indicator Green LED (1)	Off	Power off
	Solid Green	Power on

© Banner Engineering Corp. All rights reserved.
www.bannerengineering.com

Chapter Contents

Communication Parameters 8
Process Data In (Device to Master) 8
Process Data Out (Master to Device) 9
Parameters Set Using IO-Link 10
IO-Link Events 19

Chapter 5 IO-Link Data Reference Guide

This document refers to the following IODD file: Banner_Engineering-IC70-16P-K-20241101-IODD1.1.xml. The IODD file and support files can be found on www.bannerengineering.com under the download section of the product family page.

Communication Parameters

Parameter	Value	Parameter	Value
IO-Link revision	V1.1	Port class	A
Process data in length	16-bits	SIO mode	Yes
Process data out length	16-bits	Smart sensor profile	No
Bit rate	38400 bps	Block parameterization	Yes
Minimum cycle time	3.3 ms	Data storage	Yes
Device ID	659478		

Process Data In (Device to Master)

Subindex	Name	Number of Bits	Data Values
1	Channel 1 Input State	1	false=inactive, true=active
2	Channel 2 Input State	1	false=inactive, true=active
3	Channel 3 Input State	1	false=inactive, true=active
4	Channel 4 Input State	1	false=inactive, true=active
5	Channel 5 Input State	1	false=inactive, true=active
6	Channel 6 Input State	1	false=inactive, true=active
7	Channel 7 Input State	1	false=inactive, true=active
8	Channel 8 Input State	1	false=inactive, true=active
9	Channel 9 Input State	1	false=inactive, true=active
10	Channel 10 Input State	1	false=inactive, true=active
11	Channel 11 Input State	1	false=inactive, true=active
12	Channel 12 Input State	1	false=inactive, true=active
13	Channel 13 Input State	1	false=inactive, true=active
14	Channel 14 Input State	1	false=inactive, true=active
15	Channel 15 Input State	1	false=inactive, true=active
16	Channel 16 Input State	1	false=inactive, true=active

© Banner Engineering Corp. All rights reserved.
www.bannerengineering.com

Octet 0

Subindex	8	7	6	5	4	3	2	1
Bit offset	15	14	13	12	11	10	9	8
Value	1	1	1	1	1	1	0	1

Octet 1

Subindex	16	15	14	13	12	11	10	9
Bit offset	7	6	5	4	3	2	1	0
Value	1	1	1	0	1	1	1	0

Example based on the listed values

1	Channel 1 input state	active	9	Channel 9 input state	inactive
2	Channel 2 input state	inactive	10	Channel 10 input state	active
3	Channel 3 input state	active	11	Channel 11 input state	active
4	Channel 4 input state	active	12	Channel 12 input state	active
5	Channel 5 input state	active	13	Channel 13 input state	inactive
6	Channel 6 input state	active	14	Channel 14 input state	active
7	Channel 7 input state	active	15	Channel 15 input state	active
8	Channel 8 input state	active	16	Channel 16 input state	active

Process Data Out (Master to Device)

Subindex	Name	Number of Bits	Data Values
1	Channel 1 Output State	1	false=Off/InActive, true=On/Active
2	Channel 2 Output State	1	false=Off/InActive, true=On/Active
3	Channel 3 Output State	1	false=Off/InActive, true=On/Active
4	Channel 4 Output State	1	false=Off/InActive, true=On/Active
5	Channel 5 Output State	1	false=Off/InActive, true=On/Active
6	Channel 6 Output State	1	false=Off/InActive, true=On/Active
7	Channel 7 Output State	1	false=Off/InActive, true=On/Active
8	Channel 8 Output State	1	false=Off/InActive, true=On/Active
1	Channel 9 Output State	1	false=Off/InActive, true=On/Active
2	Channel 10 Output State	1	false=Off/InActive, true=On/Active
3	Channel 11 Output State	1	false=Off/InActive, true=On/Active
4	Channel 12 Output State	1	false=Off/InActive, true=On/Active
5	Channel 13 Output State	1	false=Off/InActive, true=On/Active
6	Channel 14 Output State	1	false=Off/InActive, true=On/Active
7	Channel 15 Output State	1	false=Off/InActive, true=On/Active
8	Channel 16 Output State	1	false=Off/InActive, true=On/Active

© Banner Engineering Corp. All rights reserved.
www.bannerengineering.com

Octet 0

Subindex	8	7	6	5	4	3	2	1
Bit offset	15	14	13	12	11	10	9	8

Octet 1

Subindex	16	15	14	13	12	11	10	9
Bit offset	7	6	5	4	3	2	1	0

Parameters Set Using IO-Link

These parameters can be read from and/or written to an IC70-16P-K IO-Link Hub. Also included is information about whether the variable in question is saved during data storage and whether the variable came from the IO-Link Smart Sensor Profile. Unlike process data in, which is transmitted from the IO-Link device to the IO-Link master cyclically, these parameters are read or written acyclically as needed.

Index	Subindex	Name	Length	Value Range	Default	Access Rights	Data Storage?
0	1-16	Direct Parameter Page 1 (incl. Vendor ID & Device ID)				ro	
1	1-16	Direct Parameters Page 2				rw	
2		System Command		130 = Restore Factory Settings 162 = Start discovery 163 = Stop discovery 164 = Reset All Metrics		wo	
3		Data Storage Index (device-specific list of parameters to be stored)				rw	
4-11		reserved by IO-Link Specification					
12		**Device Access Locks**					
12	1	Parameter Write Access Lock		0 = off 1 = on	0	rw	y
12	2	Data Storage Lock		0 = off, 1 = on	0	rw	y
12	3	Local Parameterization Lock		0 = off, 1 = on	0	rw	y
12	4	Local User Interface Lock		0 = off, 1 = on	0	rw	y
16		Vendor Name string		Banner Engineering Corporation		ro	
17		Vendor Text string		More Sensors. More Solutions.		ro	
18		Product Name string		IC70-16P-K		ro	
19		Product ID string		IC70-16P-K		ro	
20		Product Text string				ro	
21		Serial Number				ro	
23		Firmware Version				ro	
24		App Specific Tag (user-defined)				rw	y
36		Device Status	8-bit integer	0=Device is OK, 1=Maintainance required, 2=Out of specification, 3=Functional check, 4=Failure, 5..255 Reserved		ro	
37		Detailed Device Status	Array[6] of 3-octet			ro	
38-39		reserved					
40		Process Data Input		see Process Data In		ro	
41		Process Data Output		see Process Data Out		ro	
42-57		unused/reserved					
69		**All-Time Run Time**					

Continued on page 11

© Banner Engineering Corp. All rights reserved.
www.bannerengineering.com

Continued from page 10

Index	Subindex	Name	Length	Value Range	Default	Access Rights	Data Storage?
69	1	Run counter	32-bit Uinteger	0..2147483647		ro	y
70		**Resettable Run Time**					
70	1	Run counter	32-bit Uinteger	0..2147483647	0	rw	
78		**All-Time Run Time Event Time**					
78	1	Event Time	32-bit Uinteger	0..2147483647	0	rw	y
79		**Resettable Run Time Event Time**					
79	1	Event Time	32-bit Uinteger	0..2147483647	0	rw	y
80		**IO Metrics Channels 1 to 8**					
80	1	Channel 1 Count	32-bit Uinteger	0..2147483647		ro	
80	2	Channel 1 Count Duration -	32-bit Uinteger	0..2147483647, 50µS resolution		ro	
80	3	Channel 1 Count Events per Minute	32-bit Uinteger	1..300000		ro	
80	4	Channel 1 CountTotalizer Counter	32-bit Uinteger	0..2147483647		ro	
80	5	Channel 2 Count	32-bit Uinteger	0..2147483647		ro	
80	6	Channel 2 Duration	32-bit Uinteger	0..2147483647, 50µS resolution		ro	
80	7	Channel 2 Events per Minute	32-bit Uinteger	1..300000		ro	
80	8	Channel 2 Totalizer Counter	32-bit Uinteger	0..2147483647		ro	
80	9	Channel 3 Count	32-bit Uinteger	0..2147483647		ro	
80	10	Channel 3 Duration	32-bit Uinteger	0..2147483647, 50µS resolution		ro	
80	11	Channel 3 Events per Minute	32-bit Uinteger	1..300000		ro	
80	12	Channel 3 Totalizer Counter	32-bit Uinteger	0..2147483647		ro	
80	13	Channel 4 Count	32-bit Uinteger	0..2147483647		ro	
80	14	Channel 4 Duration	32-bit Uinteger	0..2147483647, 50µS resolution		ro	
80	15	Channel 4 Events per Minute	32-bit Uinteger	1..300000		ro	
80	16	Channel 4 Totalizer Counter	32-bit Uinteger	0..2147483647		ro	
80	17	Channel 5 Count	32-bit Uinteger	0..2147483647		ro	
80	18	Channel 5 Duration	32-bit Uinteger	0..2147483647, 50µS resolution		ro	
80	19	Channel 5 Events per Minute	32-bit Uinteger	1..300000		ro	
80	20	Channel 5 Totalizer Counter	32-bit Uinteger	0..2147483647		ro	
80	21	Channel 6 Count	32-bit Uinteger	0..2147483647		ro	
80	22	Channel 6 Duration	32-bit Uinteger	0..2147483647, 50µS resolution		ro	

Continued on page 12

© Banner Engineering Corp. All rights reserved.
www.bannerengineering.com

Continued from page 11

Index	Subindex	Name	Length	Value Range	Default	Access Rights	Data Storage?
80	23	Channel 6 Events per Minute	32-bit Uinteger	1..300000		ro	
80	24	Channel 6 Totalizer Counter	32-bit Uinteger	0..2147483647		ro	
80	25	Channel 7 Count	32-bit Uinteger	0..2147483647		ro	
80	26	Channel 7 Duration	32-bit Uinteger	0..2147483647, 50µS resolution		ro	
80	27	Channel 7 Events per Minute	32-bit Uinteger	1..300000		ro	
80	28	Channel 7 Totalizer Counter	32-bit Uinteger	0..2147483647		ro	
80	29	Channel 8 Count	32-bit Uinteger	0..2147483647		ro	
80	30	Channel 8 Duration	32-bit Uinteger	0..2147483647, 50µS resolution		ro	
80	31	Channel 8 Events per Minute	32-bit Uinteger	1..300000		ro	
80	32	Channel 8 Totalizer Counter	32-bit Uinteger	0..2147483647		ro	
81		**IO Metrics Channels 9 to 16**					
81	1	Channel 9 Count	32-bit Uinteger	0..2147483647		ro	
81	2	Channel 9 Duration -	32-bit Uinteger	0..2147483647, 50µS resolution		ro	
81	3	Channel 9 Events per Minute	32-bit Uinteger	1..300000		ro	
81	4	Channel 9 Totalizer Counter	32-bit Uinteger	0..2147483647		ro	
81	5	Channel 10 Count	32-bit Uinteger	0..2147483647		ro	
81	6	Channel 10 Duration	32-bit Uinteger	0..2147483647, 50µS resolution		ro	
81	7	Channel 10 Events per Minute	32-bit Uinteger	1..300000		ro	
81	8	Channel 10 Totalizer Counter	32-bit Uinteger	0..2147483647		ro	
81	9	Channel 11 Count	32-bit Uinteger	0..2147483647		ro	
81	10	Channel 11 Duration	32-bit Uinteger	0..2147483647, 50µS resolution		ro	
81	11	Channel 11 Events per Minute	32-bit Uinteger	1..300000		ro	
81	12	Channel 11 Totalizer Counter	32-bit Uinteger	0..2147483647		ro	
81	13	Channel 12 Count	32-bit Uinteger	0..2147483647		ro	
81	14	Channel 12 Duration	32-bit Uinteger	0..2147483647, 50µS resolution		ro	
81	15	Channel 12 Events per Minute	32-bit Uinteger	1..300000		ro	
81	16	Channel 12 Totalizer Counter	32-bit Uinteger	0..2147483647		ro	
81	17	Channel 13 Count	32-bit Uinteger	0..2147483647		ro	
81	18	Channel 13 Duration	32-bit Uinteger	0..2147483647, 50µS resolution		ro	
81	19	Channel 13 Events per Minute	32-bit Uinteger	1..300000		ro	

Continued on page 13

© Banner Engineering Corp. All rights reserved.
www.bannerengineering.com

Continued from page 12

Index	Subindex	Name	Length	Value Range	Default	Access Rights	Data Storage?
81	20	Channel 13 Totalizer Counter	32-bit Uinteger	0..2147483647		ro	
81	21	Channel 14 Count	32-bit Uinteger	0..2147483647		ro	
81	22	Channel 14 Duration	32-bit Uinteger	0..2147483647, 50µS resolution		ro	
81	23	Channel 14 Events per Minute	32-bit Uinteger	1..300000		ro	
81	24	Channel 14 Totalizer Counter	32-bit Uinteger	0..2147483647		ro	
81	25	Channel 15 Count	32-bit Uinteger	0..2147483647		ro	
81	26	Channel 15 Duration	32-bit Uinteger	0..2147483647, 50µS resolution		ro	
81	27	Channel 15 Events per Minute	32-bit Uinteger	1..300000		ro	
81	28	Channel 15 Totalizer Counter	32-bit Uinteger	0..2147483647		ro	
81	29	Channel 16 Count	32-bit Uinteger	0..2147483647		ro	
81	30	Channel 16 Duration	32-bit Uinteger	0..2147483647, 50µS resolution		ro	
81	31	Channel 16 Events per Minute	32-bit Uinteger	1..300000		ro	
81	32	Channel 16 Totalizer Counter	32-bit Uinteger	0..2147483647		ro	
82		**Selectable Metric Reset**					
82	1	Channel 1	Boolean	false=Do Not Reset, true=Reset	false	rw	
82	2	Channel 2	Boolean	false=Do Not Reset, true=Reset	false	rw	
82	3	Channel 3	Boolean	false=Do Not Reset, true=Reset	false	rw	
82	4	Channel 4	Boolean	false=Do Not Reset, true=Reset	false	rw	
82	5	Channel 5	Boolean	false=Do Not Reset, true=Reset	false	rw	
82	6	Channel 6	Boolean	false=Do Not Reset, true=Reset	false	rw	
82	7	Channel 7	Boolean	false=Do Not Reset, true=Reset	false	rw	
82	8	Channel 8	Boolean	false=Do Not Reset, true=Reset	false	rw	
82	9	Channel 9	Boolean	false=Do Not Reset, true=Reset	false	rw	
82	10	Channel 10	Boolean	false=Do Not Reset, true=Reset	false	rw	
82	11	Channel 11	Boolean	false=Do Not Reset, true=Reset	false	rw	
82	12	Channel 12	Boolean	false=Do Not Reset, true=Reset	false	rw	
82	13	Channel 13	Boolean	false=Do Not Reset, true=Reset	false	rw	
82	14	Channel 14	Boolean	false=Do Not Reset, true=Reset	false	rw	
82	15	Channel 15	Boolean	false=Do Not Reset, true=Reset	false	rw	
82	16	Channel 16	Boolean	false=Do Not Reset, true=Reset	false	rw	
82	17	Channel 1 Reset Count	32-bit Uinteger	0..2147483647	0	rw	
82	18	Channel 1 Reset Count	32-bit Uinteger	0..2147483647	0	rw	
82	19	Channel 3 Reset Count	32-bit Uinteger	0..2147483647	0	rw	
82	20	Channel 4 Reset Count	32-bit Uinteger	0..2147483647	0	rw	
82	21	Channel 5 Reset Count	32-bit Uinteger	0..2147483647	0	rw	
82	22	Channel 6 Reset Count	32-bit Uinteger	0..2147483647	0	rw	

Continued on page 14

© Banner Engineering Corp. All rights reserved.
www.bannerengineering.com

Continued from page 13

Index	Subindex	Name	Length	Value Range	Default	Access Rights	Data Storage?
82	23	Channel 7 Reset Count	32-bit Uinteger	0..2147483647	0	rw	
82	24	Channel 8 Reset Count	32-bit Uinteger	0..2147483647	0	rw	
82	25	Channel 9 Reset Count	32-bit Uinteger	0..2147483647	0	rw	
82	26	Channel 10 Reset Count	32-bit Uinteger	0..2147483647	0	rw	
82	27	Channel 11 Reset Count	32-bit Uinteger	0..2147483647	0	rw	
82	28	Channel 12 Reset Count	32-bit Uinteger	0..2147483647	0	rw	
82	29	Channel 13 Reset Count	32-bit Uinteger	0..2147483647	0	rw	
82	30	Channel 14 Reset Count	32-bit Uinteger	0..2147483647	0	rw	
82	31	Channel 15 Reset Count	32-bit Uinteger	0..2147483647	0	rw	
82	32	Channel 16 Reset Count	32-bit Uinteger	0..2147483647	0	rw	
87		**Channel 1 Configuration**					
87	1	IO Selection	8-bit Uinteger	1=PNP Input, 3=PNP Output with Pull Down	3	rw	y
87	2	Delay Mode	8-bit Uinteger	0 = Disabled, 1 = On Off Delay, 2 = On One-shot, 3 = Off One-shot, 4 = On Pulse-stretcher, 5 = Off Pulse-stretcher, 6 = Totalizer, 7 = Retriggerable On One-shot, 8 = Retriggerable Off One-Shot	0	rw	y
87	3	Delay Timer 1	32-bit Uinteger	0..2147483647 [Channel On Delay, One-shot, Pulse-stretcher time(ms) or Totalizer Count]	0	rw	y
87	4	Delay Timer 2	32-bit Uinteger	0..2147483647 (Channel Off Delay or Totalizer time)ms	0	rw	y
87	5	Mirroring Enable	8-bit Uinteger	0=Disabled, 1=Enabled	0	rw	y
87	6	Mirroring Channel Selection	8-bit Uinteger	0=Channel 1, 1=Channel 2, 2=Channel 3, 3=Channel 4, 4=Channel 5, 5=Channel 6, 6=Channel 7, 7=Channel 8, 8=Channel 9, 9=Channel 10, 10=Channel 11, 11=Channel 12, 12=Channel 13, 13=Channel 14, 14=Channel 15, 15=Channel 16	0	rw	y
87	7	Mirroring Inversion	8-bit Uinteger	0=Not Inverted, 1=Inverted	0	rw	y
88		**Channel 2 Configuration**					
88	1	IO Selection	8-bit Uinteger	1=PNP Input, 3=PNP Output with Pull Down	3	rw	y
88	2	Delay Mode	8-bit Uinteger	0 = Disabled, 1 = On Off Delay, 2 = On One-shot, 3 = Off One-shot, 4 = On Pulse-stretcher, 5 = Off Pulse-stretcher, 6 = Totalizer, 7 = Retriggerable On One-shot, 8 = Retriggerable Off One-Shot	0	rw	y
88	3	Delay Timer 1	32-bit Uinteger	0..2147483647 [Channel On Delay, One-shot, Pulse-stretcher time(ms) or Totalizer Count]	0	rw	y
88	4	Delay Timer 2	32-bit Uinteger	0..2147483647 (Channel Off Delay or Totalizer time)ms	0	rw	y
88	5	Mirroring Enable	8-bit Uinteger	0=Disabled, 1=Enabled	0	rw	y
88	6	Mirroring Channel Selection	8-bit Uinteger	0=Channel 1, 1=Channel 2, 2=Channel 3, 3=Channel 4, 4=Channel 5, 5=Channel 6, 6=Channel 7, 7=Channel 8, 8=Channel 9, 9=Channel 10, 10=Channel 11, 11=Channel 12, 12=Channel 13, 13=Channel 14, 14=Channel 15, 15=Channel 16	0	rw	y
88	7	Mirroring Inversion	8-bit Uinteger	0=Not Inverted, 1=Inverted	0	rw	y
89		**Channel 3 Configuration**					
89	1	IO Selection	8-bit Uinteger	1=PNP Input, 3=PNP Output with Pull Down	3	rw	y

Continued on page 15

© Banner Engineering Corp. All rights reserved.
www.bannerengineering.com

Continued from page 14

Index	Subindex	Name	Length	Value Range	Default	Access Rights	Data Storage?
89	2	Delay Mode	8-bit Uinteger	0 = Disabled, 1 = On Off Delay, 2 = On One-shot, 3 = Off One-shot, 4 = On Pulse-stretcher, 5 = Off Pulse-stretcher, 6 = Totalizer, 7 = Retriggerable On One-shot, 8 = Retriggerable Off One-Shot	0	rw	y
89	3	Delay Timer 1	32-bit Uinteger	0..2147483647 [Channel On Delay, One-shot, Pulse-stretcher time(ms) or Totalizer Count]	0	rw	y
89	4	Delay Timer 2	32-bit Uinteger	0..2147483647 (Channel Off Delay or Totalizer time)ms	0	rw	y
89	5	Mirroring Enable	8-bit Uinteger	0=Disabled, 1=Enabled	0	rw	y
89	6	Mirroring Channel Selection	8-bit Uinteger	0=Channel 1, 1=Channel 2, 2=Channel 3, 3=Channel 4, 4=Channel 5, 5=Channel 6, 6=Channel 7, 7=Channel 8, 8=Channel 9, 9=Channel 10, 10=Channel 11, 11=Channel 12, 12=Channel 13, 13=Channel 14, 14=Channel 15, 15=Channel 16	0	rw	y
89	7	Mirroring Inversion	8-bit Uinteger	0=Not Inverted, 1=Inverted	0	rw	y
90		**Channel 4 Configuration**					
90	1	IO Selection	8-bit Uinteger	1=PNP Input, 3=PNP Output with Pull Down	3	rw	y
90	2	Delay Mode	8-bit Uinteger	0 = Disabled, 1 = On Off Delay, 2 = On One-shot, 3 = Off One-shot, 4 = On Pulse-stretcher, 5 = Off Pulse-stretcher, 6 = Totalizer, 7 = Retriggerable On One-shot, 8 = Retriggerable Off One-Shot	0	rw	y
90	3	Delay Timer 1	32-bit Uinteger	0..2147483647 [Channel On Delay, One-shot, Pulse-stretcher time(ms) or Totalizer Count]	0	rw	y
90	4	Delay Timer 2	32-bit Uinteger	0..2147483647 (Channel Off Delay or Totalizer time)ms	0	rw	y
90	5	Mirroring Enable	8-bit Uinteger	0=Disabled, 1=Enabled	0	rw	y
90	6	Mirroring Channel Selection	8-bit Uinteger	0=Channel 1, 1=Channel 2, 2=Channel 3, 3=Channel 4, 4=Channel 5, 5=Channel 6, 6=Channel 7, 7=Channel 8, 8=Channel 9, 9=Channel 10, 10=Channel 11, 11=Channel 12, 12=Channel 13, 13=Channel 14, 14=Channel 15, 15=Channel 16	0	rw	y
90	7	Mirroring Inversion	8-bit Uinteger	0=Not Inverted, 1=Inverted	0	rw	y
91		**Channel 5 Configuration**					
91	1	IO Selection	8-bit Uinteger	1=PNP Input, 3=PNP Output with Pull Down	3	rw	y
91	2	Delay Mode	8-bit Uinteger	0 = Disabled, 1 = On Off Delay, 2 = On One-shot, 3 = Off One-shot, 4 = On Pulse-stretcher, 5 = Off Pulse-stretcher, 6 = Totalizer, 7 = Retriggerable On One-shot, 8 = Retriggerable Off One-Shot	0	rw	y
91	3	Delay Timer 1	32-bit Uinteger	0..2147483647 [Channel On Delay, One-shot, Pulse-stretcher time(ms) or Totalizer Count]	0	rw	y
91	4	Delay Timer 2	32-bit Uinteger	0..2147483647 (Channel Off Delay or Totalizer time)ms	0	rw	y
91	5	Mirroring Enable	8-bit Uinteger	0=Disabled, 1=Enabled	0	rw	y
91	6	Mirroring Channel Selection	8-bit Uinteger	0=Channel 1, 1=Channel 2, 2=Channel 3, 3=Channel 4, 4=Channel 5, 5=Channel 6, 6=Channel 7, 7=Channel 8, 8=Channel 9, 9=Channel 10, 10=Channel 11, 11=Channel 12, 12=Channel 13, 13=Channel 14, 14=Channel 15, 15=Channel 16	0	rw	y
91	7	Mirroring Inversion	8-bit Uinteger	0=Not Inverted, 1=Inverted	0	rw	y
92		**Channel 6 Configuration**					
92	1	IO Selection	8-bit Uinteger	1=PNP Input, 3=PNP Output with Pull Down	3	rw	y
92	2	Delay Mode	8-bit Uinteger	0 = Disabled, 1 = On Off Delay, 2 = On One-shot, 3 = Off One-shot, 4 = On Pulse-stretcher, 5 = Off Pulse-stretcher, 6 = Totalizer, 7 = Retriggerable On One-shot, 8 = Retriggerable Off One-Shot	0	rw	y
92	3	Delay Timer 1	32-bit Uinteger	0..2147483647 [Channel On Delay, One-shot, Pulse-stretcher time(ms) or Totalizer Count]	0	rw	y

Continued on page 16

© Banner Engineering Corp. All rights reserved.
www.bannerengineering.com

Continued from page 15

Index	Subindex	Name	Length	Value Range	Default	Access Rights	Data Storage?
92	4	Delay Timer 2	32-bit Uinteger	0..2147483647 (Channel Off Delay or Totalizer time)ms	0	rw	y
92	5	Mirroring Enable	8-bit Uinteger	0=Disabled, 1=Enabled	0	rw	y
92	6	Mirroring Channel Selection	8-bit Uinteger	0=Channel 1, 1=Channel 2, 2=Channel 3, 3=Channel 4, 4=Channel 5, 5=Channel 6, 6=Channel 7, 7=Channel 8, 8=Channel 9, 9=Channel 10, 10=Channel 11, 11=Channel 12, 12=Channel 13, 13=Channel 14, 14=Channel 15, 15=Channel 16	0	rw	y
92	7	Mirroring Inversion	8-bit Uinteger	0=Not Inverted, 1=Inverted	0	rw	y
93		**Channel 7 Configuration**					
93	1	IO Selection	8-bit Uinteger	1=PNP Input, 3=PNP Output with Pull Down	3	rw	y
93	2	Delay Mode	8-bit Uinteger	0 = Disabled, 1 = On Off Delay, 2 = On One-shot, 3 = Off One-shot, 4 = On Pulse-stretcher, 5 = Off Pulse-stretcher, 6 = Totalizer, 7 = Retriggerable On One-shot, 8 = Retriggerable Off One-Shot	0	rw	y
93	3	Delay Timer 1	32-bit Uinteger	0..2147483647 [Channel On Delay, One-shot, Pulse-stretcher time(ms) or Totalizer Count]	0	rw	y
93	4	Delay Timer 2	32-bit Uinteger	0..2147483647 (Channel Off Delay or Totalizer time)ms	0	rw	y
93	5	Mirroring Enable	8-bit Uinteger	0=Disabled, 1=Enabled	0	rw	y
93	6	Mirroring Channel Selection	8-bit Uinteger	0=Channel 1, 1=Channel 2, 2=Channel 3, 3=Channel 4, 4=Channel 5, 5=Channel 6, 6=Channel 7, 7=Channel 8, 8=Channel 9, 9=Channel 10, 10=Channel 11, 11=Channel 12, 12=Channel 13, 13=Channel 14, 14=Channel 15, 15=Channel 16	0	rw	y
93	7	Mirroring Inversion	8-bit Uinteger	0=Not Inverted, 1=Inverted	0	rw	y
94		**Channel 8 Configuration**					
94	1	IO Selection	8-bit Uinteger	1=PNP Input, 3=PNP Output with Pull Down	3	rw	y
94	2	Delay Mode	8-bit Uinteger	0 = Disabled, 1 = On Off Delay, 2 = On One-shot, 3 = Off One-shot, 4 = On Pulse-stretcher, 5 = Off Pulse-stretcher, 6 = Totalizer, 7 = Retriggerable On One-shot, 8 = Retriggerable Off One-Shot	0	rw	y
94	3	Delay Timer 1	32-bit Uinteger	0..2147483647 [Channel On Delay, One-shot, Pulse-stretcher time(ms) or Totalizer Count]	0	rw	y
94	4	Delay Timer 2	32-bit Uinteger	0..2147483647 (Channel Off Delay or Totalizer time)ms	0	rw	y
94	5	Mirroring Enable	8-bit Uinteger	0=Disabled, 1=Enabled	0	rw	y
94	6	Mirroring Channel Selection	8-bit Uinteger	0=Channel 1, 1=Channel 2, 2=Channel 3, 3=Channel 4, 4=Channel 5, 5=Channel 6, 6=Channel 7, 7=Channel 8, 8=Channel 9, 9=Channel 10, 10=Channel 11, 11=Channel 12, 12=Channel 13, 13=Channel 14, 14=Channel 15, 15=Channel 16	0	rw	y
94	7	Mirroring Inversion	8-bit Uinteger	0=Not Inverted, 1=Inverted	0	rw	y
95		**Channel 9 Configuration**					
95	1	IO Selection	8-bit Uinteger	1=PNP Input, 3=PNP Output with Pull Down	3	rw	y
95	2	Delay Mode	8-bit Uinteger	0 = Disabled, 1 = On Off Delay, 2 = On One-shot, 3 = Off One-shot, 4 = On Pulse-stretcher, 5 = Off Pulse-stretcher, 6 = Totalizer, 7 = Retriggerable On One-shot, 8 = Retriggerable Off One-Shot	0	rw	y
95	3	Delay Timer 1	32-bit Uinteger	0..2147483647 [Channel On Delay, One-shot, Pulse-stretcher time(ms) or Totalizer Count]	0	rw	y
95	4	Delay Timer 2	32-bit Uinteger	0..2147483647 (Channel Off Delay or Totalizer time)ms	0	rw	y
95	5	Mirroring Enable	8-bit Uinteger	0=Disabled, 1=Enabled	0	rw	y

Continued on page 17

© Banner Engineering Corp. All rights reserved.
www.bannerengineering.com

Continued from page 16

Index	Subindex	Name	Length	Value Range	Default	Access Rights	Data Storage?
95	6	Mirroring Channel Selection	8-bit Uinteger	0=Channel 1, 1=Channel 2, 2=Channel 3, 3=Channel 4, 4=Channel 5, 5=Channel 6, 6=Channel 7, 7=Channel 8, 8=Channel 9, 9=Channel 10, 10=Channel 11, 11=Channel 12, 12=Channel 13, 13=Channel 14, 14=Channel 15, 15=Channel 16	0	rw	y
95	7	Mirroring Inversion	8-bit Uinteger	0=Not Inverted, 1=Inverted	0	rw	y
96		**Channel 10 Configuration**					
96	1	IO Selection	8-bit Uinteger	1=PNP Input, 3=PNP Output with Pull Down	3	rw	y
96	2	Delay Mode	8-bit Uinteger	0 = Disabled, 1 = On Off Delay, 2 = On One-shot, 3 = Off One-shot, 4 = On Pulse-stretcher, 5 = Off Pulse-stretcher, 6 = Totalizer, 7 = Retriggerable On One-shot, 8 = Retriggerable Off One-Shot	0	rw	y
96	3	Delay Timer 1	32-bit Uinteger	0..2147483647 [Channel On Delay, One-shot, Pulse-stretcher time(ms) or Totalizer Count]	0	rw	y
96	4	Delay Timer 2	32-bit Uinteger	0..2147483647 (Channel Off Delay or Totalizer time)ms	0	rw	y
96	5	Mirroring Enable	8-bit Uinteger	0=Disabled, 1=Enabled	0	rw	y
96	6	Mirroring Channel Selection	8-bit Uinteger	0=Channel 1, 1=Channel 2, 2=Channel 3, 3=Channel 4, 4=Channel 5, 5=Channel 6, 6=Channel 7, 7=Channel 8, 8=Channel 9, 9=Channel 10, 10=Channel 11, 11=Channel 12, 12=Channel 13, 13=Channel 14, 14=Channel 15, 15=Channel 16	0	rw	y
96	7	Mirroring Inversion	8-bit Uinteger	0=Not Inverted, 1=Inverted	0	rw	y
97		**Channel 11 Configuration**					
97	1	IO Selection	8-bit Uinteger	1=PNP Input, 3=PNP Output with Pull Down	3	rw	y
97	2	Delay Mode	8-bit Uinteger	0 = Disabled, 1 = On Off Delay, 2 = On One-shot, 3 = Off One-shot, 4 = On Pulse-stretcher, 5 = Off Pulse-stretcher, 6 = Totalizer, 7 = Retriggerable On One-shot, 8 = Retriggerable Off One-Shot	0	rw	y
97	3	Delay Timer 1	32-bit Uinteger	0..2147483647 [Channel On Delay, One-shot, Pulse-stretcher time(ms) or Totalizer Count]	0	rw	y
97	4	Delay Timer 2	32-bit Uinteger	0..2147483647 (Channel Off Delay or Totalizer time)ms	0	rw	y
97	5	Mirroring Enable	8-bit Uinteger	0=Disabled, 1=Enabled	0	rw	y
97	6	Mirroring Channel Selection	8-bit Uinteger	0=Channel 1, 1=Channel 2, 2=Channel 3, 3=Channel 4, 4=Channel 5, 5=Channel 6, 6=Channel 7, 7=Channel 8, 8=Channel 9, 9=Channel 10, 10=Channel 11, 11=Channel 12, 12=Channel 13, 13=Channel 14, 14=Channel 15, 15=Channel 16	0	rw	y
97	7	Mirroring Inversion	8-bit Uinteger	0=Not Inverted, 1=Inverted	0	rw	y
98		**Channel 12 Configuration**					
98	1	IO Selection	8-bit Uinteger	1=PNP Input, 3=PNP Output with Pull Down	3	rw	y
98	2	Delay Mode	8-bit Uinteger	0 = Disabled, 1 = On Off Delay, 2 = On One-shot, 3 = Off One-shot, 4 = On Pulse-stretcher, 5 = Off Pulse-stretcher, 6 = Totalizer, 7 = Retriggerable On One-shot, 8 = Retriggerable Off One-Shot	0	rw	y
98	3	Delay Timer 1	32-bit Uinteger	0..2147483647 [Channel On Delay, One-shot, Pulse-stretcher time(ms) or Totalizer Count]	0	rw	y
98	4	Delay Timer 2	32-bit Uinteger	0..2147483647 (Channel Off Delay or Totalizer time)ms	0	rw	y
98	5	Mirroring Enable	8-bit Uinteger	0=Disabled, 1=Enabled	0	rw	y
98	6	Mirroring Channel Selection	8-bit Uinteger	0=Channel 1, 1=Channel 2, 2=Channel 3, 3=Channel 4, 4=Channel 5, 5=Channel 6, 6=Channel 7, 7=Channel 8, 8=Channel 9, 9=Channel 10, 10=Channel 11, 11=Channel 12, 12=Channel 13, 13=Channel 14, 14=Channel 15, 15=Channel 16	0	rw	y
98	7	Mirroring Inversion	8-bit Uinteger	0=Not Inverted, 1=Inverted	0	rw	y

Continued on page 18

© Banner Engineering Corp. All rights reserved.
www.bannerengineering.com

Continued from page 17

Index	Subindex	Name	Length	Value Range	Default	Access Rights	Data Storage?
99		**Channel 13 Configuration**					
99	1	IO Selection	8-bit Uinteger	1=PNP Input, 3=PNP Output with Pull Down	3	rw	y
99	2	Delay Mode	8-bit Uinteger	0 = Disabled, 1 = On Off Delay, 2 = On One-shot, 3 = Off One-shot, 4 = On Pulse-stretcher, 5 = Off Pulse-stretcher, 6 = Totalizer, 7 = Retriggerable On One-shot, 8 = Retriggerable Off One-Shot	0	rw	y
99	3	Delay Timer 1	32-bit Uinteger	0..2147483647 [Channel On Delay, One-shot, Pulse-stretcher time(ms) or Totalizer Count]	0	rw	y
99	4	Delay Timer 2	32-bit Uinteger	0..2147483647 (Channel Off Delay or Totalizer time)ms	0	rw	y
99	5	Mirroring Enable	8-bit Uinteger	0=Disabled, 1=Enabled	0	rw	y
99	6	Mirroring Channel Selection	8-bit Uinteger	0=Channel 1, 1=Channel 2, 2=Channel 3, 3=Channel 4, 4=Channel 5, 5=Channel 6, 6=Channel 7, 7=Channel 8, 8=Channel 9, 9=Channel 10, 10=Channel 11, 11=Channel 12, 12=Channel 13, 13=Channel 14, 14=Channel 15, 15=Channel 16	0	rw	y
99	7	Mirroring Inversion	8-bit Uinteger	0=Not Inverted, 1=Inverted	0	rw	y
100		**Channel 14 Configuration**					
100	1	IO Selection	8-bit Uinteger	1=PNP Input, 3=PNP Output with Pull Down	3	rw	y
100	2	Delay Mode	8-bit Uinteger	0 = Disabled, 1 = On Off Delay, 2 = On One-shot, 3 = Off One-shot, 4 = On Pulse-stretcher, 5 = Off Pulse-stretcher, 6 = Totalizer, 7 = Retriggerable On One-shot, 8 = Retriggerable Off One-Shot	0	rw	y
100	3	Delay Timer 1	32-bit Uinteger	0..2147483647 [Channel On Delay, One-shot, Pulse-stretcher time(ms) or Totalizer Count]	0	rw	y
100	4	Delay Timer 2	32-bit Uinteger	0..2147483647 (Channel Off Delay or Totalizer time)ms	0	rw	y
100	5	Mirroring Enable	8-bit Uinteger	0=Disabled, 1=Enabled	0	rw	y
100	6	Mirroring Channel Selection	8-bit Uinteger	0=Channel 1, 1=Channel 2, 2=Channel 3, 3=Channel 4, 4=Channel 5, 5=Channel 6, 6=Channel 7, 7=Channel 8, 8=Channel 9, 9=Channel 10, 10=Channel 11, 11=Channel 12, 12=Channel 13, 13=Channel 14, 14=Channel 15, 15=Channel 16	0	rw	y
100	7	Mirroring Inversion	8-bit Uinteger	0=Not Inverted, 1=Inverted	0	rw	y
101		**Channel 15 Configuration**					
101	1	IO Selection	8-bit Uinteger	1=PNP Input, 3=PNP Output with Pull Down	3	rw	y
101	2	Delay Mode	8-bit Uinteger	0 = Disabled, 1 = On Off Delay, 2 = On One-shot, 3 = Off One-shot, 4 = On Pulse-stretcher, 5 = Off Pulse-stretcher, 6 = Totalizer, 7 = Retriggerable On One-shot, 8 = Retriggerable Off One-Shot	0	rw	y
101	3	Delay Timer 1	32-bit Uinteger	0..2147483647 [Channel On Delay, One-shot, Pulse-stretcher time(ms) or Totalizer Count]	0	rw	y
101	4	Delay Timer 2	32-bit Uinteger	0..2147483647 (Channel Off Delay or Totalizer time)ms	0	rw	y
101	5	Mirroring Enable	8-bit Uinteger	0=Disabled, 1=Enabled	0	rw	y
101	6	Mirroring Channel Selection	8-bit Uinteger	0=Channel 1, 1=Channel 2, 2=Channel 3, 3=Channel 4, 4=Channel 5, 5=Channel 6, 6=Channel 7, 7=Channel 8, 8=Channel 9, 9=Channel 10, 10=Channel 11, 11=Channel 12, 12=Channel 13, 13=Channel 14, 14=Channel 15, 15=Channel 16	0	rw	y
101	7	Mirroring Inversion	8-bit Uinteger	0=Not Inverted, 1=Inverted	0	rw	y
102		**Channel 16 Configuration**					
102	1	IO Selection	8-bit Uinteger	1=PNP Input, 3=PNP Output with Pull Down	3	rw	y

Continued on page 19

© Banner Engineering Corp. All rights reserved.
www.bannerengineering.com

Continued from page 18

Index	Subindex	Name	Length	Value Range	Default	Access Rights	Data Storage?
102	2	Delay Mode	8-bit Uinteger	0 = Disabled, 1 = On Off Delay, 2 = On One-shot, 3 = Off One-shot, 4 = On Pulse-stretcher, 5 = Off Pulse-stretcher, 6 = Totalizer, 7 = Retriggerable On One-shot, 8 = Retriggerable Off One-Shot	0	rw	y
102	3	Delay Timer 1	32-bit Uinteger	0..2147483647 [Channel On Delay, One-shot, Pulse-stretcher time(ms) or Totalizer Count]	0	rw	y
102	4	Delay Timer 2	32-bit Uinteger	0..2147483647 (Channel Off Delay or Totalizer time)ms	0	rw	y
102	5	Mirroring Enable	8-bit Uinteger	0=Disabled, 1=Enabled	0	rw	y
102	6	Mirroring Channel Selection	8-bit Uinteger	0=Channel 1, 1=Channel 2, 2=Channel 3, 3=Channel 4, 4=Channel 5, 5=Channel 6, 6=Channel 7, 7=Channel 8, 8=Channel 9, 9=Channel 10, 10=Channel 11, 11=Channel 12, 12=Channel 13, 13=Channel 14, 14=Channel 15, 15=Channel 16	0	rw	y
102	7	Mirroring Inversion	8-bit Uinteger	0=Not Inverted, 1=Inverted	0	rw	y

IO-Link Events

Events are acyclic transmissions from the IO-Link device to the IO-Link master. Events can be error messages and/or warning or maintenance data.

Code	Type	Name	Description
25376 (0x6320)	Error	Parameter error	Check datasheet and values
36000 (0x8CA0)	Warning	All-time Run Time Event	Event indicating the corresponding configured running time has elapsed.
36001 (0x8CA1)	Warning	Resettable Run Time Event	Event indicating the corresponding configured running time has elapsed.

© Banner Engineering Corp. All rights reserved.
www.bannerengineering.com

Chapter Contents

FCC Part 15 Class B for Unintentional Radiators 20
Industry Canada ICES-003(B)..... 20
Dimensions..... 21

Chapter 6 Specifications

Supply Voltage

18 V DC to 30 V DC at 400 mA maximum (exclusive of load)

Use only with a suitable Class 2 power supply (UL) or Limited Power Supply (CE)

Power Pass-Through Current

4 amps maximum total for up to 24 V DC

3.3 amps maximum total for up to 30 V DC

Discrete Output Load Rating

200 mA maximum at 40 °C

Derating of 2 mA per degree Celsius above 40 °C

140 mA maximum at 70 °C

Supply Protection Circuitry

Protected against reverse polarity and transient voltages

Leakage Current Immunity

400 µA

Indicators

Green: Power

Amber: IO-Link communications

Amber: 16x Discrete In/Out statuses

Connections

Screw terminals

Removable Screw Terminals

Wire size: 24–16AWG

Wire strip length: 7 mm

Tightening torque: 0.2 N·m

Construction

Hub Base: black plastic polybutylene terephthalate (PBT)

Vibration and Mechanical Shock

Meets IEC 60068-2-6 requirements (Vibration: 10 Hz to 55 Hz, 0.5 mm amplitude, 5 minutes sweep, 30 minutes dwell)

Meets IEC 60068-2-27 requirements (Shock: 15G 11 ms duration, half sine wave)

Environmental Rating

IP20; for use inside an IP54 or better enclosure

Operating Conditions

Temperature: –40 °C to +70 °C (–40 °F to +158 °F)

90% at +70 °C maximum relative humidity (non-condensing)

Storage Temperature: –40 °C to +80 °C (–40 °F to +176 °F)

Certifications

Banner Engineering BV
Park Lane, Culliganlaan 2F bus 3
1831 Diegem, BELGIUM

Turck Banner LTD Blenheim House
Blenheim Court
Wickford, Essex SS11 8YT
GREAT BRITAIN

IO-Link®

Product Identification

SNAP SIGNAL®

FCC Part 15 Class B for Unintentional Radiators

(Part 15.105(b)) This equipment has been tested and found to comply with the limits for a Class B digital device, pursuant to part 15 of the FCC Rules. These limits are designed to provide reasonable protection against harmful interference in a residential installation. This equipment generates, uses, and can radiate radio frequency energy and, if not installed and used in accordance with the instructions, may cause harmful interference to radio communications. However, there is no guarantee that interference will not occur in a particular installation. If this equipment does cause harmful interference to radio or television reception, which can be determined by turning the equipment off and on, the user is encouraged to try to correct the interference by one or more of the following measures:

- Reorient or relocate the receiving antenna.
- Increase the separation between the equipment and receiver.
- Connect the equipment into an outlet on a circuit different from that to which the receiver is connected.
- Consult the dealer or an experienced radio/TV technician for help.

(Part 15.21) Any changes or modifications not expressly approved by the party responsible for compliance could void the user's authority to operate this equipment.

Industry Canada ICES-003(B)

This device complies with CAN ICES-3 (B)/NMB-3(B). Operation is subject to the following two conditions: 1) This device may not cause harmful interference; and 2) This device must accept any interference received, including interference that may cause undesired operation.

Cet appareil est conforme à la norme NMB-3(B). Le fonctionnement est soumis aux deux conditions suivantes : (1) ce dispositif ne peut pas occasionner d'interférences, et (2) il doit tolérer toute interférence, y compris celles susceptibles de provoquer un fonctionnement non souhaité du dispositif.

© Banner Engineering Corp. All rights reserved.
www.bannerengineering.com

Dimensions

All measurements are listed in millimeters [inches], unless noted otherwise. The measurements provided are subject to change.

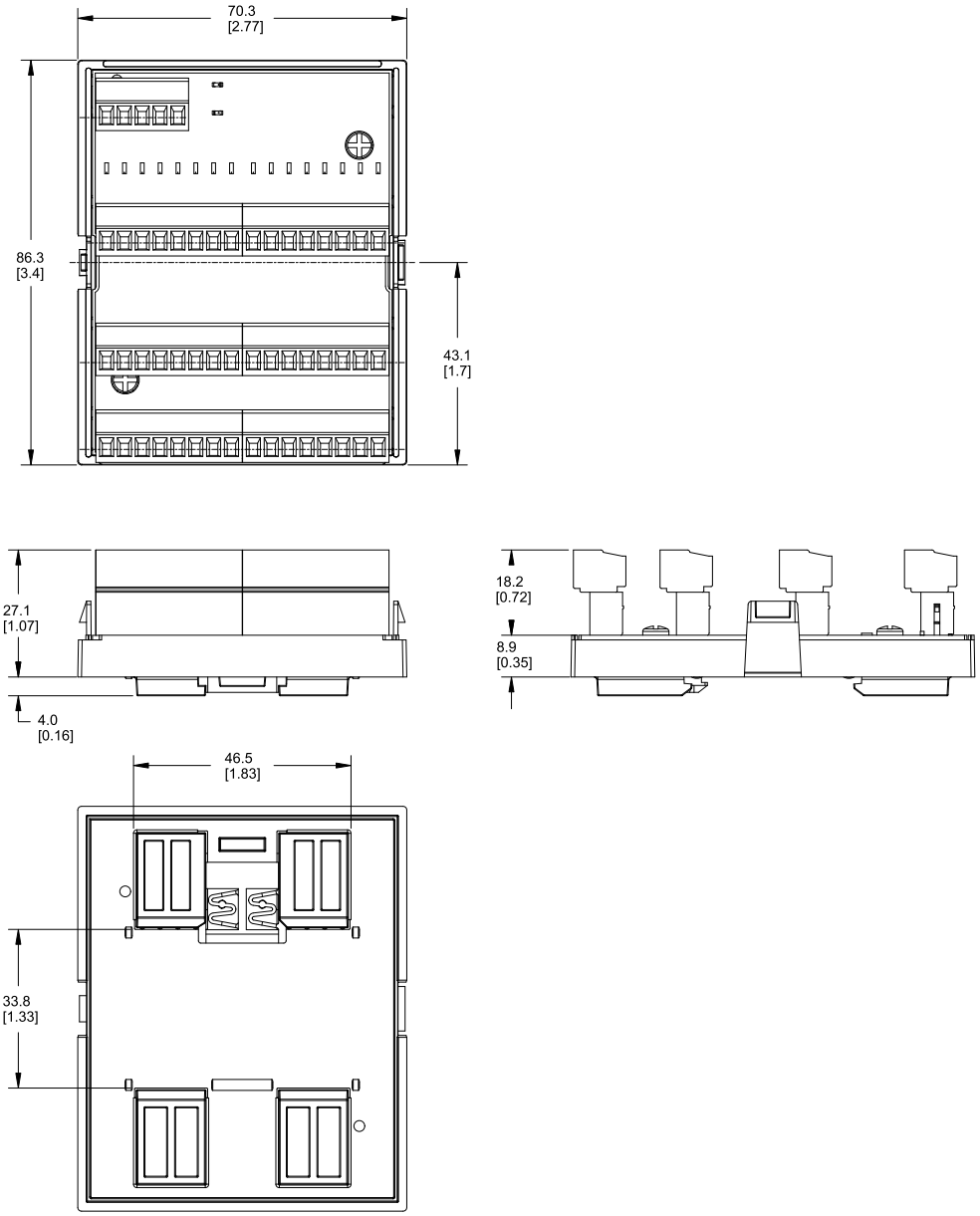

© Banner Engineering Corp. All rights reserved.
www.bannerengineering.com

Chapter Contents

IC70 Cordsets 22

Chapter 7 Accessories

IC70 Cordsets

4-pin Single-Ended M12 Male Cordsets				
Model	**Length**	**Dimensions (mm)**	**Pinout (Male)**	
BC-M12M4-22-1	1 m (3.28 ft)	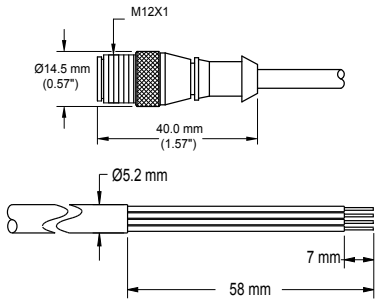	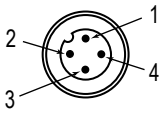	1 = Brown 2 = White 3 = Blue 4 = Black
BC-M12M4-22-2	2 m (6.56 ft)			
BC-M12M4-22-5	5 m (16.4 ft)			
BC-M12M4-22-8	8 m (26.25 ft)			
BC-M12M4-22-10	10 m (30.81 ft)			
BC-M12M4-22-15	15 m (49.2 ft)			

4-pin Single-Ended M12 Male Right-Angle Cordsets				
Model	**Length**	**Dimensions (mm)**	**Pinout (Male)**	
BC-M12M4A-22-1	1 m (3.28 ft)	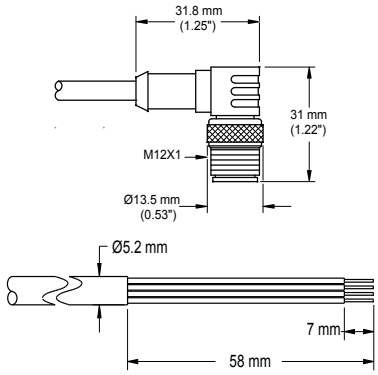	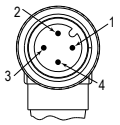	1 = Brown 2 = White 3 = Blue 4 = Black
BC-M12M4A-22-2	2 m (6.56 ft)			
BC-M12M4A-22-5	5 m (16.4 ft)			
BC-M12M4A-22-8	8 m (26.25 ft)			
BC-M12M4A-22-10	10 m (30.81 ft)			
BC-M12M4A-22-15	15 m (49.2 ft)			

4-pin Single-Ended M12 Female Cordsets				
Model	**Length**	**Dimensions (mm)**	**Pinout (Female)**	
BC-M12F4-22-1	1 m (3.28 ft)	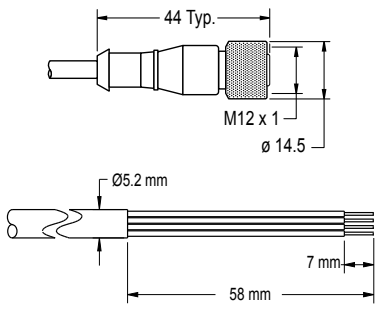	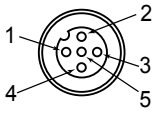	1 = Brown 2 = White 3 = Blue 4 = Black 5 = Unused
BC-M12F4-22-2	2 m (6.56 ft)			
BC-M12F4-22-5	5 m (16.4 ft)			
BC-M12F4-22-8	8 m (26.25 ft)			
BC-M12F4-22-10	10 m (30.81 ft)			
BC-M12F4-22-15	15 m (49.2 ft)			
BC-M12F4-22-20	20 m (65.61 ft)			
BC-M12F4-22-25	25 m (82.02 ft)			
BC-M12F4-22-30	30 m (98.42 ft)			

© Banner Engineering Corp. All rights reserved.
www.bannerengineering.com

4-pin Single-Ended M12 Female Right-Angle Cordsets				
Model	**Length**	**Dimensions (mm)**	**Pinout (Female)**	
BC-M12F4A-22-1	1 m (3.28 ft)	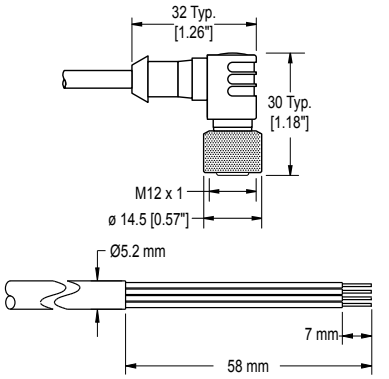	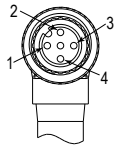	1 = Brown 2 = White 3 = Blue 4 = Black 5 = Unused
BC-M12F4A-22-2	2 m (6.56 ft)			
BC-M12F4A-22-5	5 m (16.4 ft)			
BC-M12F4A-22-8	8 m (26.25 ft)			
BC-M12F4A-22-10	10 m (30.81 ft)			
BC-M12F4A-22-15	15 m (49.2 ft)			

© Banner Engineering Corp. All rights reserved.
www.bannerengineering.com

Chapter Contents

Resources 24
Repairs 24
Contact Us 24
Banner Engineering Corp Limited Warranty 24

Chapter 8 Product Support and Maintenance

Resources

For more information, see the following documents and files.

IC70-16P-K In-Cabinet IO-Link Hub IO-Link Data Reference Guide, p/n 247609
IODD file: Banner_Engineering-IC70-16P-K-20241101-IODD1.1.xml
IC70-16P-K In-Cabinet IO-Link Hub Product Manual, p/n246946

The IODD file and support files can be found on www.bannerengineering.com under the download section of the product family page.

Repairs

Contact Banner Engineering for troubleshooting of this device. **Do not attempt any repairs to this Banner device; it contains no field-replaceable parts or components.** If the device, device part, or device component is determined to be defective by a Banner Applications Engineer, they will advise you of Banner's RMA (Return Merchandise Authorization) procedure.

> **IMPORTANT:** If instructed to return the device, pack it with care. Damage that occurs in return shipping is not covered by warranty.

Contact Us

Banner Engineering Corp. headquarters is located at: 9714 Tenth Avenue North | Plymouth, MN 55441, USA | Phone: + 1 888 373 6767

For worldwide locations and local representatives, visit www.bannerengineering.com.

Banner Engineering Corp Limited Warranty

Banner Engineering Corp. warrants its products to be free from defects in material and workmanship for one year following the date of shipment. Banner Engineering Corp. will repair or replace, free of charge, any product of its manufacture which, at the time it is returned to the factory, is found to have been defective during the warranty period. This warranty does not cover damage or liability for misuse, abuse, or the improper application or installation of the Banner product.

THIS LIMITED WARRANTY IS EXCLUSIVE AND IN LIEU OF ALL OTHER WARRANTIES WHETHER EXPRESS OR IMPLIED (INCLUDING, WITHOUT LIMITATION, ANY WARRANTY OF MERCHANTABILITY OR FITNESS FOR A PARTICULAR PURPOSE), AND WHETHER ARISING UNDER COURSE OF PERFORMANCE, COURSE OF DEALING OR TRADE USAGE.

This Warranty is exclusive and limited to repair or, at the discretion of Banner Engineering Corp., replacement. **IN NO EVENT SHALL BANNER ENGINEERING CORP. BE LIABLE TO BUYER OR ANY OTHER PERSON OR ENTITY FOR ANY EXTRA COSTS, EXPENSES, LOSSES, LOSS OF PROFITS, OR ANY INCIDENTAL, CONSEQUENTIAL OR SPECIAL DAMAGES RESULTING FROM ANY PRODUCT DEFECT OR FROM THE USE OR INABILITY TO USE THE PRODUCT, WHETHER ARISING IN CONTRACT OR WARRANTY, STATUTE, TORT, STRICT LIABILITY, NEGLIGENCE, OR OTHERWISE.**

Banner Engineering Corp. reserves the right to change, modify or improve the design of the product without assuming any obligations or liabilities relating to any product previously manufactured by Banner Engineering Corp. Any misuse, abuse, or improper application or installation of this product or use of the product for personal protection applications when the product is identified as not intended for such purposes will void the product warranty. Any modifications to this product without prior express approval by Banner Engineering Corp will void the product warranties. All specifications published in this document are subject to change; Banner reserves the right to modify product specifications or update documentation at any time. Specifications and product information in English supersede that which is provided in any other language. For the most recent version of any documentation, refer to: www.bannerengineering.com.

For patent information, see www.bannerengineering.com/patents.

© Banner Engineering Corp. All rights reserved.
www.bannerengineering.com

LinkedIn

X (formerly Twitter)

Facebook



© 2025. All rights reserved.
www.bannerengineering.com