Features

For use with any Vision System



- Rugged, waterproof housing, rated IP67
- Mounts directly from the back or surface mount using available brackets
- Smooth exterior for easy cleaning
- Diffused backlights for any Vision System
- Continuous or strobed operation is selectable via sensor software
- Solid-state LED matrix, in four sizes
- Available in four visible colors plus infrared
- Extremely bright light
- Completely non-corrosive
- Extremely even intensity edge-to-edge
- M12 connector

IMPORTANT: Read the following instructions before operating the light. Please download the complete LED Series Sealed Backlight technical documentation, available in multiple languages, from www.bannerengineering.com for details on the proper use, applications, Warnings, and installation instructions of this device.

IMPORTANT: Lea el siguiente instructivo antes de operar el luminario. Por favor descargue desde www.bannerengineering.com toda la documentación técnica de los LED Series Sealed Backlight, disponibles en múltiples idiomas, para detalles del uso adecuado, aplicaciones, advertencias, y las instrucciones de instalación de estos dispositivos.

IMPORTANT: Lisez les instructions suivantes avant d'utiliser le luminaire. Veuillez télécharger la documentation technique complète des LED Series Sealed Backlight sur notre site www.bannerengineering.com pour les détails sur leur utilisation correcte, les applications, les notes de sécurité et les instructions de montage.

Models

Models	LED Color	Wavelength	Lighted Area
LEDIB75X150PW2-XQ	Infrared	850 nm	75 mm x 150 mm (2.95 in x 5.91 in)
LEDRB75X150PW2-XQ	Visible Red	633 nm	
LEDBB75X150PW2-XQ	Blue	469 nm	
LEDGB75X150PW2-XQ	Green	525 nm	
LEDWB75X150PW2-XQ	White	6500 K	
LEDIB150X150PW2-XQ	Infrared	850 nm	150 mm x 150 mm (5.91 in x 5.91 in)
LEDRB150X150PW2-XQ	Visible Red	633 nm	
LEDBB150X150PW2-XQ	Blue	469 nm	
LEDGB150X150PW2-XQ	Green	525 nm	
LEDWB150X150PW2-XQ	White	6500 K	
LEDIB225X150PW2-XQ	Infrared	850 nm	225 mm x 150 mm (8.86 in x 5.91 in)
LEDRB225X150PW2-XQ	Visible Red	633 nm	
LEDBB225X150PW2-XQ	Blue	469 nm	
LEDGB225X150PW2-XQ	Green	525 nm	
LEDWB225X150PW2-XQ	White	6500 K	
LEDIB300X150PW2-XQ	Infrared	850 nm	300 mm x 150 mm (11.81 in x 5.91 in)
LEDRB300X150PW2-XQ	Visible Red	633 nm	
LEDBB300X150PW2-XQ	Blue	469 nm	
LEDGB300X150PW2-XQ	Green	525 nm	
LEDWB300X150PW2-XQ	White	6500 K	

Original Instructions
15-Jan-26

© Banner Engineering Corp. All rights reserved.
www.bannerengineering.com

149837
p/n: 149837 Rev. H

ПРОМЭЛЕКТРОНИКА/ sales@prom-elec.com

Wiring

Wire Purpose	Cable Wire Color[1]	Continuous On Mode	Strobed Mode		*Presence*Plus Pro Controller Terminal Block
Power Wires	**Brown (1)**	+24 V DC	+24 V DC		Pin 01[2]
	Blue (3)	common	common		Pin 02
Strobe Polarity Control	**Gray (5)**	open	**Active Low:** open		Open — Active Low
			Active High: connect to common (Blue wire)		Pin 02 — Active High
Strobe Voltage Wires	**White (2)**	open	0 V DC = ON (Active Low)	+5 V DC to 24 V DC = OFF (Active Low)	Pin 04
			0 V DC = OFF (Active High)	+5 V DC to 24 V DC = ON (Active High)	
	Black (4)	open	Strobe common		Pin 02

Pinouts for Mating Cable

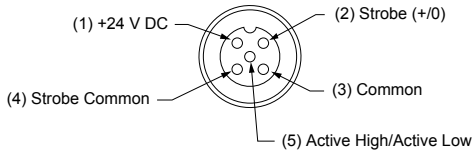

Specifications

Light Source

LED; wavelengths:

LED Color	Wavelength
Infrared	850 nm
Visible Red	633 nm
Blue	469 nm
Green	525 nm
White	6500 K

Supply Voltage and Current

75 mm x 150 mm models: 24 V DC ± 10% at 550 mA maximum

150 mm x 150 mm models: 24 V DC ± 10% at 1.1 A maximum

225 mm x 150 mm models: 24 V DC ± 10% at 1.65 A maximum

300 mm x 150 mm models: 24 V DC ± 10% at 2.2 A maximum

Use only with a suitable Class 2 power supply (UL) or SELV power supply (CE)

See the electrical characteristics on the product label.

Connections

Integral 5-pin M12 male quick-disconnect connector, accessory cordset required

Operating Conditions

Temperature: 0 °C to +50 °C (+32 °F to +122 °F)

Humidity: 95% maximum relative humidity (non-condensing)

Illumination

Diffused for use in applications needing a backlit light

Useful Life

B50/L50 Lifetime > 100,000 hours (Infrared, Red)

B50/L50 Lifetime > 90,000 hours (Blue, Green, White)

Construction

Black Valox™ housing; acrylic window

Environmental Rating

IP67

Certification

Banner Engineering BV
Park Lane, Culliganlaan 2F bus 3
1831 Diegem, BELGIUM

c UL us LISTED

[1] For Banner-supplied wire.
[2] When connecting the light to a *Presence*PLUS Pro controller terminal block, the controller supply must be 24 V DC ± 10%.

© Banner Engineering Corp. All rights reserved.

Required Overcurrent Protection

WARNING: Electrical connections must be made by qualified personnel in accordance with local and national electrical codes and regulations.

Overcurrent protection is required to be provided by end product application per the supplied table.

Overcurrent protection may be provided with external fusing or via Current Limiting, Class 2 Power Supply.

Supply wiring leads < 24 AWG shall not be spliced.

For additional product support, go to www.bannerengineering.com.

Supply Wiring (AWG)	Required Overcurrent Protection (A)	Supply Wiring (AWG)	Required Overcurrent Protection (A)
20	5.0	26	1.0
22	3.0	28	0.8
24	2.0	30	0.5

FCC Part 15 Class A for Unintentional Radiators

This equipment has been tested and found to comply with the limits for a Class A digital device, pursuant to Part 15 of the FCC Rules. These limits are designed to provide reasonable protection against harmful interference when the equipment is operated in a commercial environment. This equipment generates, uses, and can radiate radio frequency energy and, if not installed and used in accordance with the instruction manual, may cause harmful interference to radio communications. Operation of this equipment in a residential area is likely to cause harmful interference in which case the user will be required to correct the interference at his own expense.

(Part 15.21) Any changes or modifications not expressly approved by the party responsible for compliance could void the user's authority to operate this equipment.

Industry Canada ICES-003(A)

This device complies with CAN ICES-3 (A)/NMB-3(A). Operation is subject to the following two conditions: 1) This device may not cause harmful interference; and 2) This device must accept any interference received, including interference that may cause undesired operation.

Cet appareil est conforme à la norme NMB-3(A). Le fonctionnement est soumis aux deux conditions suivantes : (1) ce dispositif ne peut pas occasionner d'interférences, et (2) il doit tolérer toute interférence, y compris celles susceptibles de provoquer un fonctionnement non souhaité du dispositif.

Dimensions

All measurements are listed in millimeters [inches], unless noted otherwise. The measurements provided are subject to change.

75 mm × 150 mm models

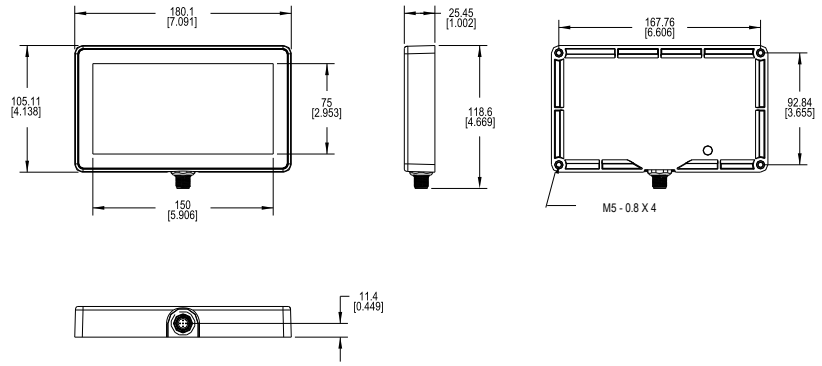

150 mm × 150 mm models

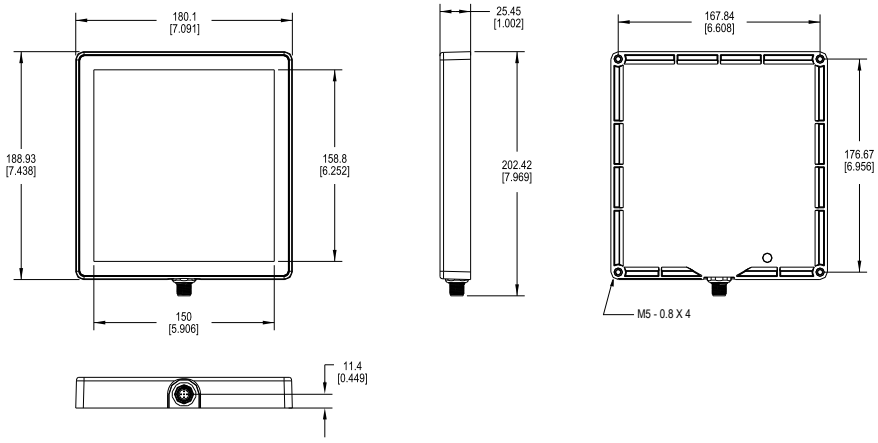

© Banner Engineering Corp. All rights reserved.
www.bannerengineering.com

225 mm × 150 mm models

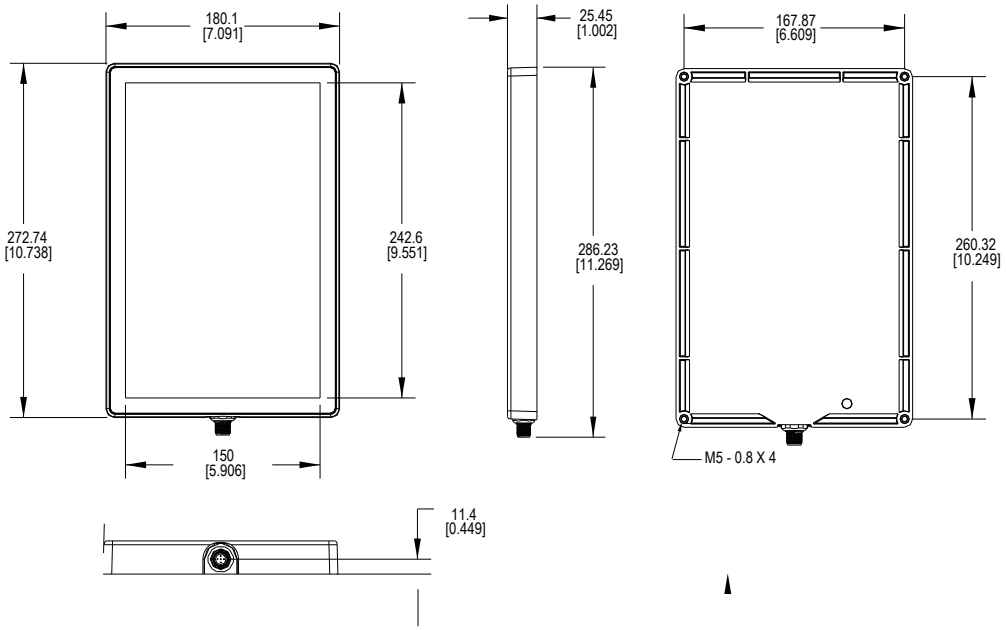

300 mm × 150 mm models

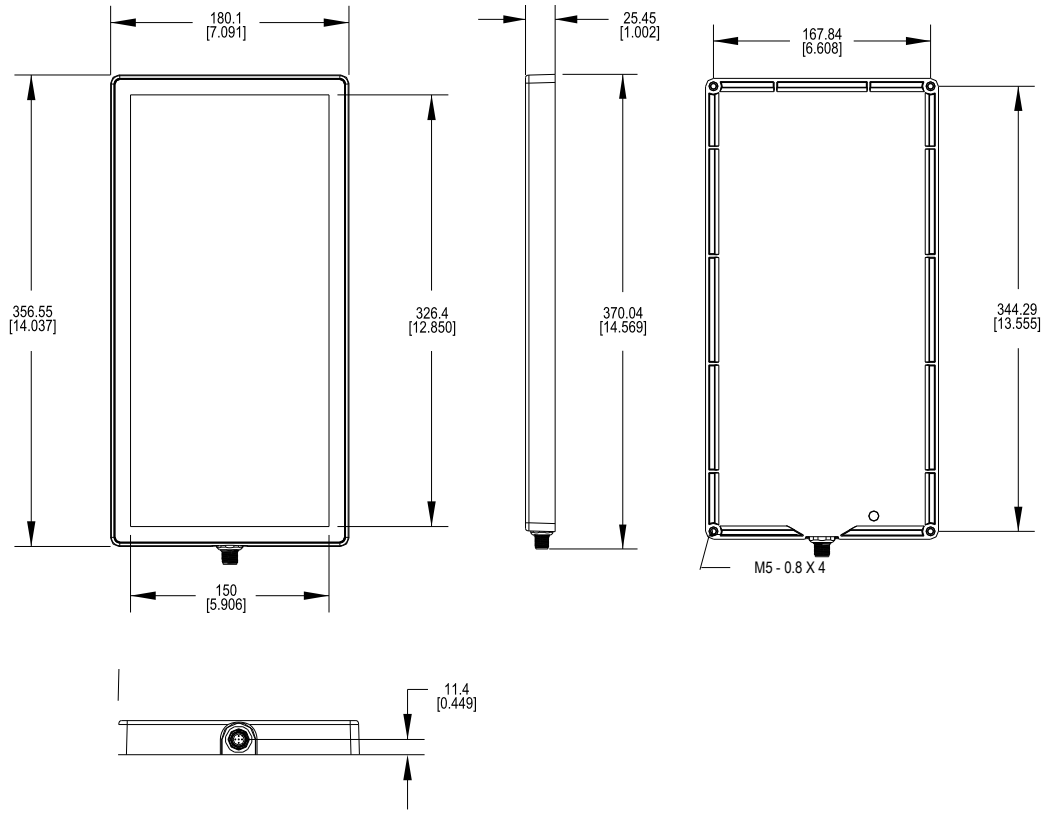

© Banner Engineering Corp. All rights reserved.
www.bannerengineering.com

Accessories

Cordsets

5-Pin Single-Ended M12 Female Cordsets				
Model	**Length**	**Style**	**Dimensions**	**Pinout (Female)**
MQDC20-506	2 m (6.56 ft)	Straight	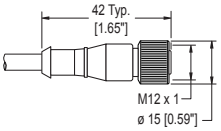	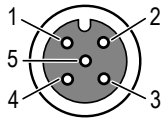 1 = Brown 2 = White 3 = Blue 4 = Black 5 = Gray
MQDC20-515	5 m (16.4 ft)			
MQDC20-530	9 m (29.5 ft)			

5-Pin Single-Ended M12 Female Stainless Steel Nut Cordsets				
Model	**Length**	**Style**	**Dimensions**	**Pinout (Female)**
MQDC20SS-506	2 m (6.52 ft)	Straight	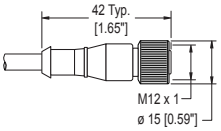	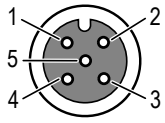 1 = Brown 2 = White 3 = Blue 4 = Black 5 = Gray
MQDC20SS-515	5 m (16.4 ft)			
MQDC20SS-530	9 m (29.5 ft)			

Brackets

SMBBSSM

- 316 stainless steel bracket and hardware
- Includes 2 brackets; four M5 socket drive, button head screws to attach to light
- CAD Files: DXF, PDF, IGS, STP

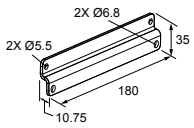

Banner Engineering Corp Limited Warranty

Banner Engineering Corp. warrants its products to be free from defects in material and workmanship for one year following the date of shipment. Banner Engineering Corp. will repair or replace, free of charge, any product of its manufacture which, at the time it is returned to the factory, is found to have been defective during the warranty period. This warranty does not cover damage or liability for misuse, abuse, or the improper application or installation of the Banner product.

THIS LIMITED WARRANTY IS EXCLUSIVE AND IN LIEU OF ALL OTHER WARRANTIES WHETHER EXPRESS OR IMPLIED (INCLUDING, WITHOUT LIMITATION, ANY WARRANTY OF MERCHANTABILITY OR FITNESS FOR A PARTICULAR PURPOSE), AND WHETHER ARISING UNDER COURSE OF PERFORMANCE, COURSE OF DEALING OR TRADE USAGE.

This Warranty is exclusive and limited to repair or, at the discretion of Banner Engineering Corp., replacement. **IN NO EVENT SHALL BANNER ENGINEERING CORP. BE LIABLE TO BUYER OR ANY OTHER PERSON OR ENTITY FOR ANY EXTRA COSTS, EXPENSES, LOSSES, LOSS OF PROFITS, OR ANY INCIDENTAL, CONSEQUENTIAL OR SPECIAL DAMAGES RESULTING FROM ANY PRODUCT DEFECT OR FROM THE USE OR INABILITY TO USE THE PRODUCT, WHETHER ARISING IN CONTRACT OR WARRANTY, STATUTE, TORT, STRICT LIABILITY, NEGLIGENCE, OR OTHERWISE.**

Banner Engineering Corp. reserves the right to change, modify or improve the design of the product without assuming any obligations or liabilities relating to any product previously manufactured by Banner Engineering Corp. Any misuse, abuse, or improper application or installation of this product or use of the product for personal protection applications when the product is identified as not intended for such purposes will void the product warranty. Any modifications to this product without prior express approval by Banner Engineering Corp will void the product warranties. All specifications published in this document are subject to change; Banner reserves the right to modify product specifications or update documentation at any time. Specifications and product information in English supersede that which is provided in any other language. For the most recent version of any documentation, refer to: www.bannerengineering.com.

For patent information, see www.bannerengineering.com/patents.

Mexican Importer

Banner Engineering de Mèxico, S. de R.L. de C.V. | David Alfaro Siqueiros 103 Piso 2 Valle oriente | San Pedro Garza Garcia Nuevo Leòn, C. P. 66269

81 8363.2714

© Banner Engineering Corp. All rights reserved.
www.bannerengineering.com