MODEL NO.	"FD"	"FL"	"L"	P/N
PIF630UMVFA	4.65 [.183 ±.001]	15.0 [.59]	10000 [394]	10629
PIF615UMVFA	4.65 [.183 ±.001]	15.0 [.59]	5000 [197]	61190
PIF66UMVFA	4.65 [.183 ±.001]	15.0 [.59]	2000 [79]	56083

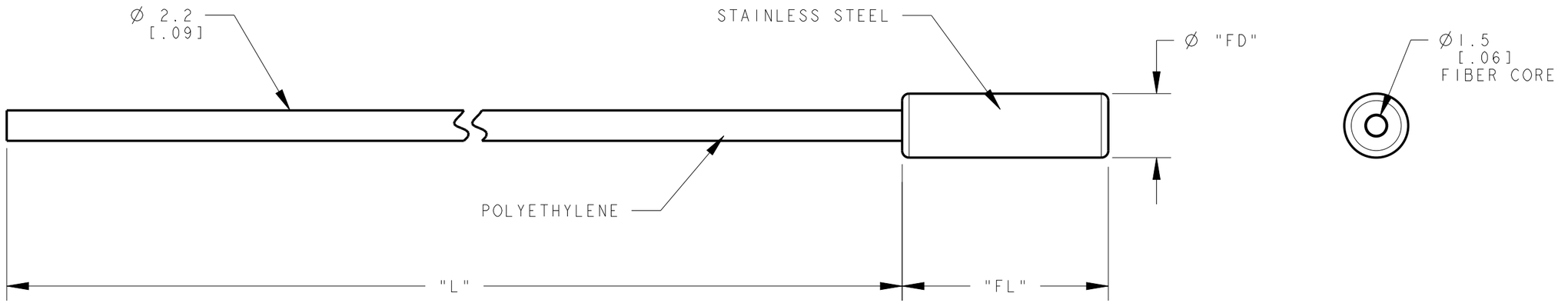

NOTES:
1. ALL DIMENSIONS ARE MILLIMETERS [INCHES] UNLESS OTHERWISE NOTED.
2. REFER TO "www.bannerengineering.com" FOR ADDITIONAL DATA AND SPECIFICATIONS.

This drawing is the property of BANNER ENGINEERING CORP. Any use or reproduction, in any form, without prior written permission of Banner is prohibited.
© 2015 Banner Engineering Corp.

THIRD ANGLE PROJECTION

BANNER ENGINEERING CORP.
www.bannerengineering.com

TITLE
PIF6 SERIES UNTERMINATED WEB CAD DRAWING 2D/3D

SIZE	DRAWING NO.	REV.
B	166405	A
SCALE 3:1	SHEET 1 OF 1	

CREO

ПРОМЭЛЕКТРОНИКА/ sales@prom-elec.com