MODEL NO.	"L"	P/N
PBT26U-VL	2000	87532
PBT23U-VL	1000	87531

NOTES:

1. OPERATING TEMPERATURE -55°C ~ +70°C.
2. MINIMUM BEND RADIUS R15.

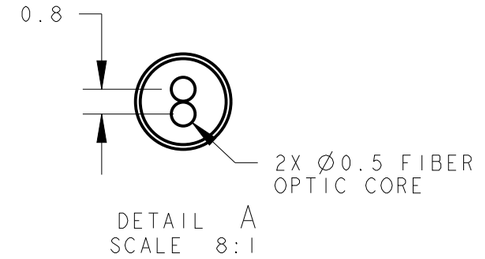

DETAIL A
SCALE 8:1

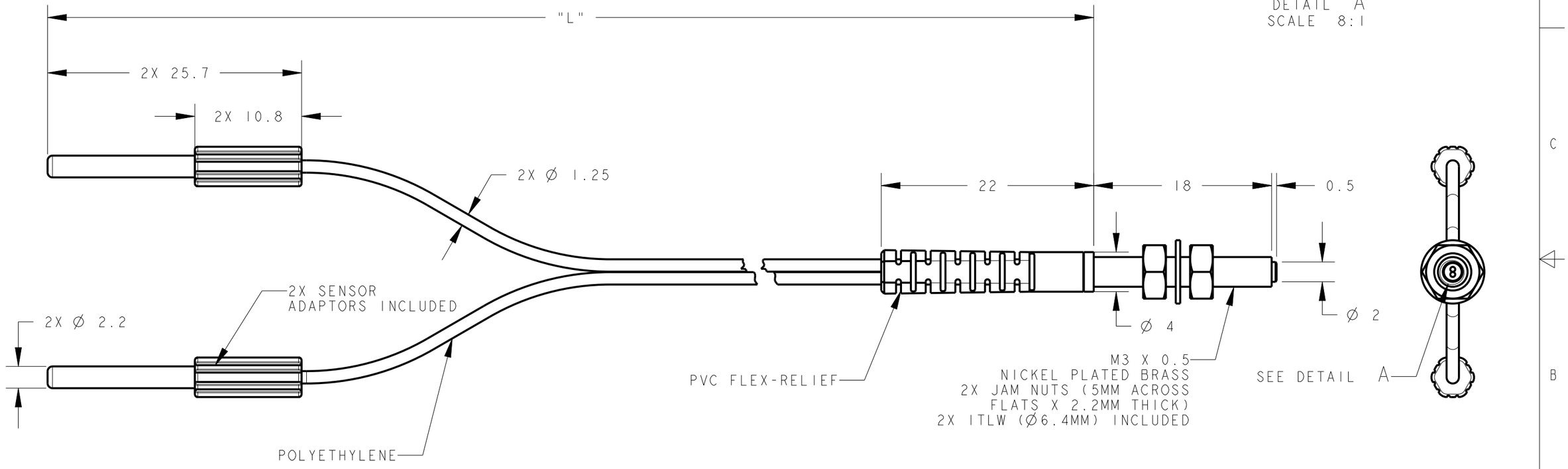

NOTES:
1. ALL DIMENSIONS ARE MILLIMETERS [INCHES] UNLESS OTHERWISE NOTED.
2. REFER TO "www.bannerengineering.com" FOR ADDITIONAL DATA AND SPECIFICATIONS.

This drawing is the property of BANNER ENGINEERING CORP. Any use or reproduction, in any form, without prior written permission of Banner is prohibited.
© 2015 Banner Engineering Corp.

THIRD ANGLE PROJECTION

BANNER ENGINEERING CORP.
www.bannerengineering.com

TITLE

PBT2 VALUE LINE SERIES UNTERMINATED

SIZE	DRAWING NO.	REV.
B	178351	B
SCALE 5:2	SHEET 1 OF 1	

CREO

ПРОМЭЛЕКТРОНИКА/ sales@prom-elec.com