

ISOMETRIC VIEW
SCALE 1:1

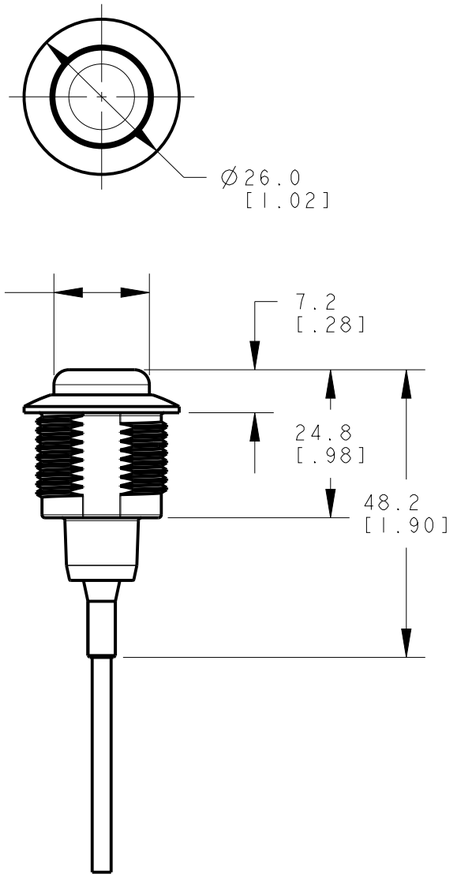


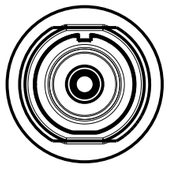

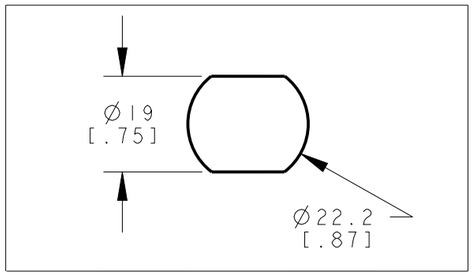


SUGGESTED PANEL CUTOUT

NOTES:
1. ALL DIMENSIONS ARE MILLIMETERS [INCHES] UNLESS OTHERWISE NOTED.
2. REFER TO "www.bannerengineering.com" FOR ADDITIONAL DATA AND SPECIFICATIONS.

This drawing is the property of BANNER ENGINEERING CORP. Any use or reproduction, in any form, without prior written permission of Banner is prohibited.
© Banner Engineering Corp.

THIRD ANGLE PROJECTION

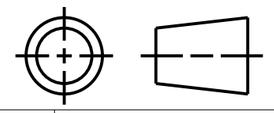

BANNER ENGINEERING CORP.
www.bannerengineering.com

TITLE
**S22L PIGTAIL/CABLE**
**WEB CAD DRAWINGS 2D/3D**

| SIZE | DRAWING NO. | REV. |
|---|---|---|
| B | 172064 | B |
| SCALE 1:1 | SHEET 1 OF 1 | |

CREO

ПРОМЭЛЕКТРОНИКА/ sales@prom-elec.com