MODEL NO.	"L"	P/N
PBCT23T	1000 [39]	39146
PBCT21T	306 [12]	45066
PBCT21.5T	500 [19]	48013
PBCT23TMSS	1000 [39]	48042
PBCT26TMSS	2000 [79]	48057
PBCT29TMSS	1525 [60]	51791
PBCT29TMSS	2743 [108]	51810
PBCT26T	2000 [79]	56096
PBCT212T	3658 [144]	77267

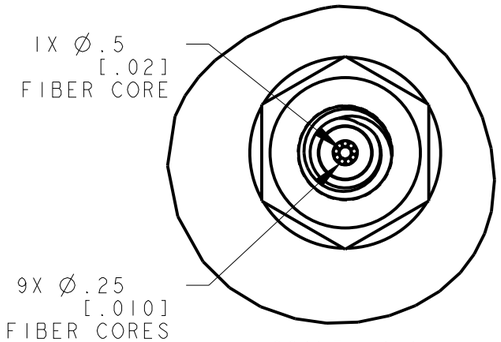

SCALE 4:1

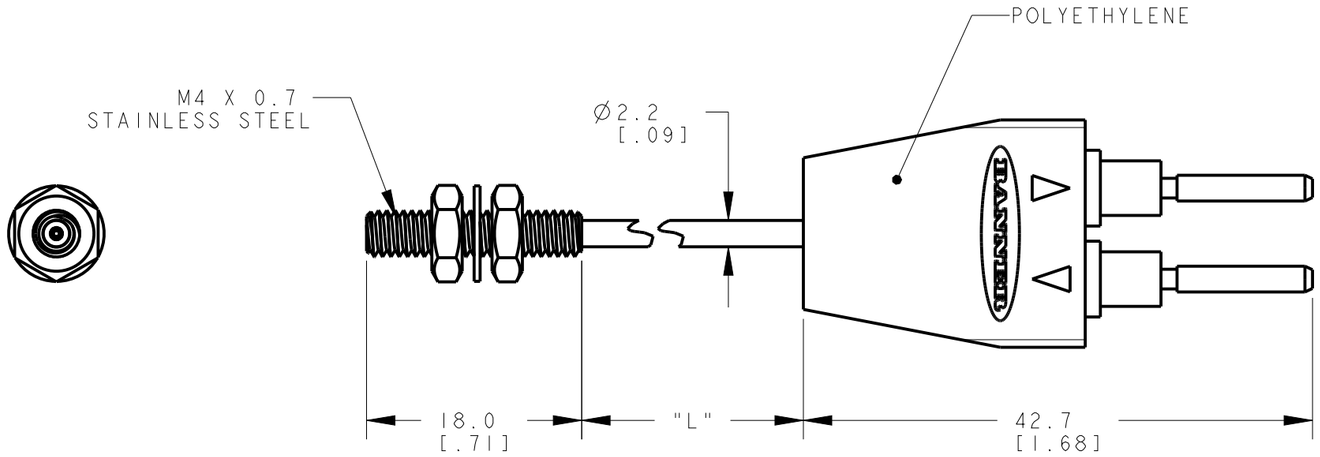

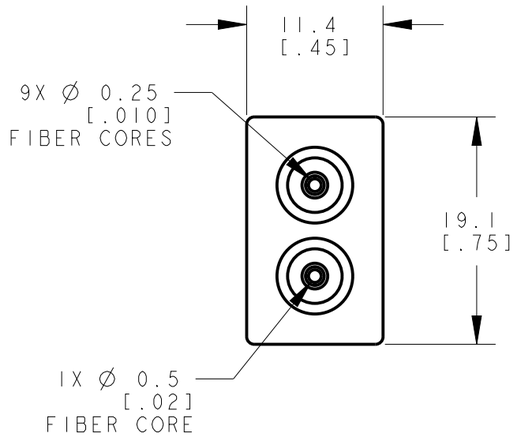

NOTES:
1. ALL DIMENSIONS ARE MILLIMETERS [INCHES] UNLESS OTHERWISE NOTED.
2. REFER TO "www.bannerengineering.com" FOR ADDITIONAL DATA AND SPECIFICATIONS.

This drawing is the property of BANNER ENGINEERING CORP. Any use or reproduction, in any form, without prior written permission of Banner is prohibited.
© 2015 Banner Engineering Corp.

THIRD ANGLE PROJECTION

BANNER ENGINEERING CORP.
www.bannerengineering.com

TITLE

PBCT2 SERIES TERMINATED

SIZE	DRAWING NO.	REV.
B	192766	B
SCALE 2:1	SHEET 1 OF 1	

CREO

ПРОМЭЛЕКТРОНИКА/ sales@prom-elec.com