SPECIFICATIONS	
RATED CURRENT	4 AMPS
RATED VOLTAGE	250 VOLTS
WITHSTANDING VOLTAGE	1000 V/60 Hz AT 1 MINUTE
INSULATION RESISTANCE	GREATER THAN/EQUAL TO 100 MΩ
WIRE RANGE	20-24 AWG
WIRE STRIP LENGTH OF THE INDIVIDUAL WIRE	8mm
WIRE STRIP LENGTH OF SHEATH	24mm
OPERATING TEMPERATURE	-40°C TO +85°C
DEGREE OF PROTECTION	IP68

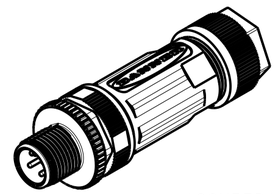

ISOMETRIC VIEW
SCALE 1:1

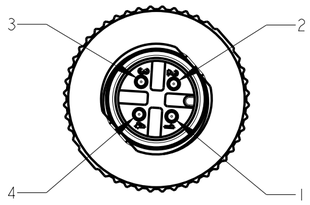

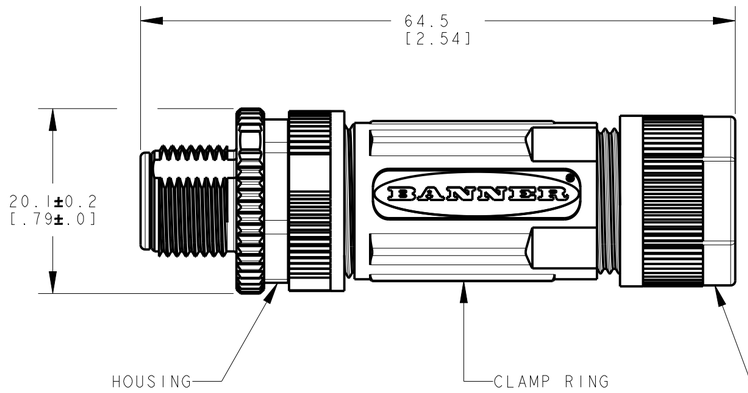

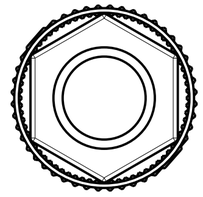

NOTES:
1. ALL DIMENSIONS ARE MILLIMETERS [INCHES] UNLESS OTHERWISE NOTED.
2. REFER TO "www.bannerengineering.com" FOR ADDITIONAL DATA AND SPECIFICATIONS.

This drawing is the property of BANNER ENGINEERING CORP. Any use or reproduction, in any form, without prior written permission of Banner is prohibited.
© 2015 Banner Engineering Corp.

THIRD ANGLE PROJECTION

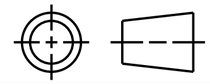

BANNER ENGINEERING CORP.
www.bannerengineering.com

TITLE
BFW-M12M4-6SL

SIZE	DRAWING NO.	REV.
C	246782	A
SCALE 2:1	SHEET 1 OF 1	

CREO

ПРОМЭЛЕКТРОНИКА/ sales@prom-elec.com