EZ-SCREEN® Type 2 Heavy Duty Light Screen Supplemental Instruction Manual

This supplemental manual describes the EZ-SCREEN Type 2 Heavy Duty (HD) Light Screen: applications and limitations, models, names, alignment aids, replacement parts, literature, mounting brackets, dimensions and mounting instructions. It is to be used in conjunction with the standard EZ-SCREEN Type 2 Light Screen manual p/n 122452.

Features

- An optoelectronic safeguarding device in a compact, rugged package for heavy-duty machines
- Two-piece design
- Models available with Trip or Latch output operation (automatic or manual start / restart)
- Creates a screen of synchronized, modulated infrared sensing beams. Choose from 12 sizes, in 150 mm (6") increments: defined areas from 150 mm to 1.8 m (6" to 70.9")
- 30 mm (1.18") resolution
- Remote Test input terminals for simulating a "blocked" condition
- Operating range up to 15 m (50')
- Type 2 per IEC 61496-1/-2, Category 2 per EN 13849-1
- FMEA tested according to IEC 61946-1, Type 2 requirements
- Receiver LEDs provide system status and emitter/ receiver alignment indications
- Highly immune to EMI, RFI, ambient light, weld flash, and strobe light
- Vibration-tolerant, factory burned-in emitter and receiver circuitry for toughness and dependability

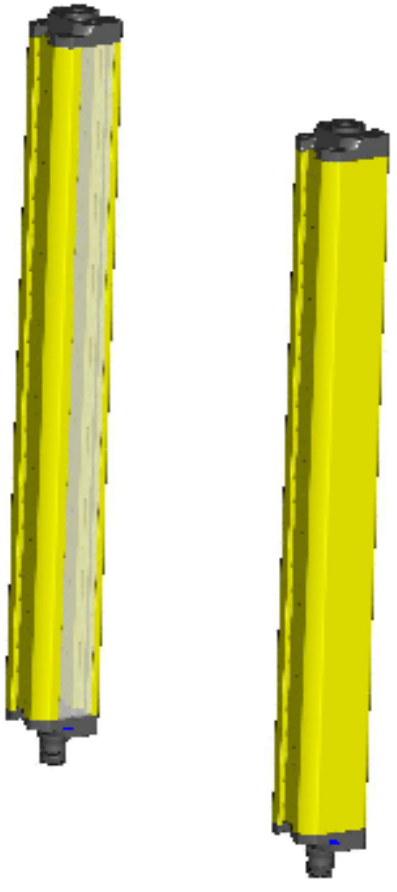

CE

Banner Engineering Corp. Minneapolis, U.S.A.
www.bannerengineering.com Tel: 763.544.3164

P/N 141321 Rev A

ПРОМЭЛЕКТРОНИКА/ sales@prom-elec.com

Applications and Limitations

The Banner EZ-SCREEN Type 2 Heavy Duty (the System) is intended for lower-risk machine guarding applications and other safeguarding applications, as determined by a risk assessment. It is the user's responsibility to verify whether the safeguarding is appropriate for the application and is installed, as instructed by manual p/n 122452, by a Qualified Person (as defined in the Glossary in that manual).

Before installing the EZ-SCREEN Type 2 Heavy Duty, read entirely the information provided in manual p/n 122452, paying particular attention to all of sections 1 and 3. The System's ability to perform its safeguarding function depends upon the appropriateness of the application and upon its proper mechanical and electrical installation and interfacing to the guarded machine. **If all mounting, installation, interfacing, and checkout procedures are not followed properly, the System cannot provide the protection for which it was designed.**

EZ-SCREEN Type 2 Heavy Duty is typically used, but is not limited to, the following applications (dependent on machine risk assessment):

- Punch presses
- Assembly equipment
- Automated production equipment
- Equipment and process protection (non-personnel safety)
- Applications that could result in only slight (normally reversible) injuries (such as a bump, knock-down, trapping but not crushing, minor cuts and abrasions, etc.)

Emitter and Receiver Models

Order one 8-pin cordset for each emitter or receiver (see Section 2.2 in manual p/n 122452).

Defined Area Height	Sensor	Model Number		Number of Beams	Response Time (Tr)
		Trip-Output Models	Latch-Output Models		
150 mm (5.9")	Emitter Receiver Pair	**LS2HDE30-150Q8** **LS2HDTR30-150Q8** **LS2HDTP30-150Q88**	**LS2HDE30-150Q8** **LS2HDLR30-150Q8** **LS2HDLP30-150Q88**	8	11 ms
300 mm (11.8")	Emitter Receiver Pair	**LS2HDE30-300Q8** **LS2HDTR30-300Q8** **LS2HDTP30-300Q88**	**LS2HDE30-300Q8** **LS2HDLR30-300Q8** **LS2HDLP30-300Q88**	16	13 ms
450 mm (17.7")	Emitter Receiver Pair	**LS2HDE30-450Q8** **LS2HDTR30-450Q8** **LS2HDTP30-450Q88**	**LS2HDE30-450Q8** **LS2HDLR30-450Q8** **LS2HDLP30-450Q88**	24	14 ms
600 mm (23.6")	Emitter Receiver Pair	**LS2HDE30-600Q8** **LS2HDTR30-600Q8** **LS2HDTP30-600Q88**	**LS2HDE30-600Q8** **LS2HDLR30-600Q8** **LS2HDLP30-600Q88**	32	16 ms
750 mm (29.5")	Emitter Receiver Pair	**LS2HDE30-750Q8** **LS2HDTR30-750Q8** **LS2HDTP30-750Q88**	**LS2HDE30-750Q8** **LS2HDLR30-750Q8** **LS2HDLP30-750Q88**	40	17 ms
900 mm (35.4")	Emitter Receiver Pair	**LS2HDE30-900Q8** **LS2HDTR30-900Q8** **LS2HDTP30-900Q88**	**LS2HDE30-900Q8** **LS2HDLR30-900Q8** **LS2HDLP30-900Q88**	48	19 ms
1050 mm (41.3")	Emitter Receiver Pair	**LS2HDE30-1050Q8** **LS2HDTR30-1050Q8** **LS2HDTP30-1050Q88**	**LS2HDE30-1050Q8** **LS2HDLR30-1050Q8** **LS2HDLP30-1050Q88**	56	21 ms
1200 mm (47.2")	Emitter Receiver Pair	**LS2HDE30-1200Q8** **LS2HDTR30-1200Q8** **LS2HDTP30-1200Q88**	**LS2HDE30-1200Q8** **LS2HDLR30-1200Q8** **LS2HDLP30-1200Q88**	64	22 ms
1350 mm (53.1")	Emitter Receiver Pair	**LS2HDE30-1350Q8** **LS2HDTR30-1350Q8** **LS2HDTP30-1350Q88**	**LS2HDE30-1350Q8** **LS2HDLR30-1350Q8** **LS2HDLP30-1350Q88**	72	24 ms
1500 mm (59.0")	Emitter Receiver Pair	**LS2HDE30-1500Q8** **LS2HDTR30-1500Q8** **LS2HDTP30-1500Q88**	**LS2HDE30-1500Q8** **LS2HDLR30-1500Q8** **LS2HDLP30-1500Q88**	80	25 ms
1650 mm (65.0")	Emitter Receiver Pair	**LS2HDE30-1650Q8** **LS2HDTR30-1650Q8** **LS2HDTP30-1650Q88**	**LS2HDE30-1650Q8** **LS2HDLR30-1650Q8** **LS2HDLP30-1650Q88**	88	27 ms
1800 mm (70.9")	Emitter Receiver Pair	**LS2HDE30-1800Q8** **LS2HDTR30-1800Q8** **LS2HDTP30-1800Q88**	**LS2HDE30-1800Q8** **LS2HDLR30-1800Q8** **LS2HDLP30-1800Q88**	96	29 ms

Alignment Aids

Model	Description
LAT-1-LSHD	Self-contained visible-beam laser tool for aligning any EZ-SCREEN Type 2 HD emitter/receiver pair. Includes retroreflective target material and mounting clip.
LSHDA-LAT1	Clip-on retroreflective LAT target
LSHDA-LAT-2	Replacement adaptor (clip) hardware for LS2HD.. models
BRT-THG-2-100	2" retroreflective tape, 100'
BT-1	Beam Tracker (see section 5.3 in manual p/n 122452)

Replacement Parts, Mounting Bracket Kits, Accessories

Description		Model
Keyed reset switch		**MGA-KSO-1**
Replacement key		**MGA-K-1**
30 mm test piece		**STP-14**
Standard end bracket kit with hardware (includes 2 end brackets and hardware; see Figure 1)		**LSHDMB-1**
Hardware kit to mount to MSA series stands (M4 T-nuts and screws; use with end brackets)		**LSHD-TN4-4**
Center bracket kit (includes bracket(s) and hardware to mount to MSA series stands; see Section 2.3 in manual p/n 122452)	1 bracket for 750-1050 mm long sensors	**LSHDCMB-1**
	2 brackets for 1200-1800 mm long sensors	**LSHDCMB-2**
Vibration mounts		**LSHDVM-4**

Literature

The following documentation is supplied with each EZ-SCREEN Type 2 HD receiver. Additional copies are available at no charge.

Description	Part #
EZ-SCREEN Type 2 Heavy Duty Supplemental Instruction Manual	141321
EZ-SCREEN Type 2 Instruction Manual	122452
Checkout Procedure Card (Daily)	122450
Checkout Procedure Card (Semi-Annual)	122451

Standard End Cap Bracket

Model LSHDMB-1: Qty 2

- Supplied per emitter or receiver; mounting hardware included
- 2.3 mm thickness, black zinc plated chromate dip finish
- See Figure 3

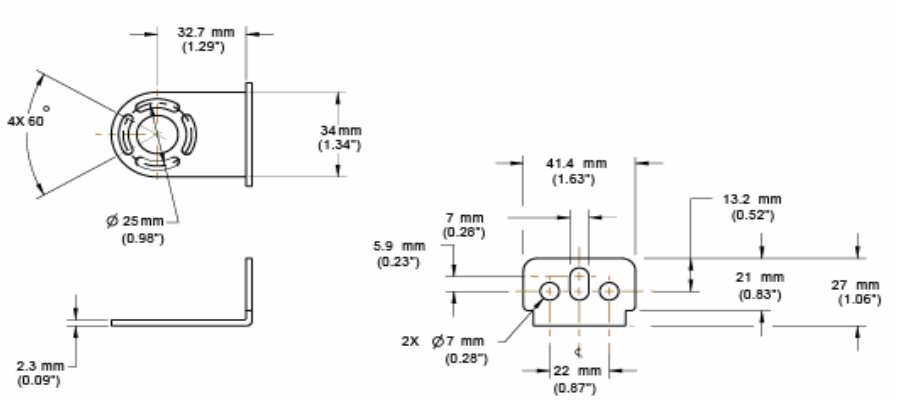

Standard Center Brackets

Model LSHDCMB-1: Qty 1, for sensors 750-1050 mm long

Model LSHDCMB-2: Qty 2, for sensors 1200-1800 mm long

- Supplied per emitter or receiver; mounting hardware included
- 2.3 mm thickness, black zinc plated chromate dip finish
- See Figure 3

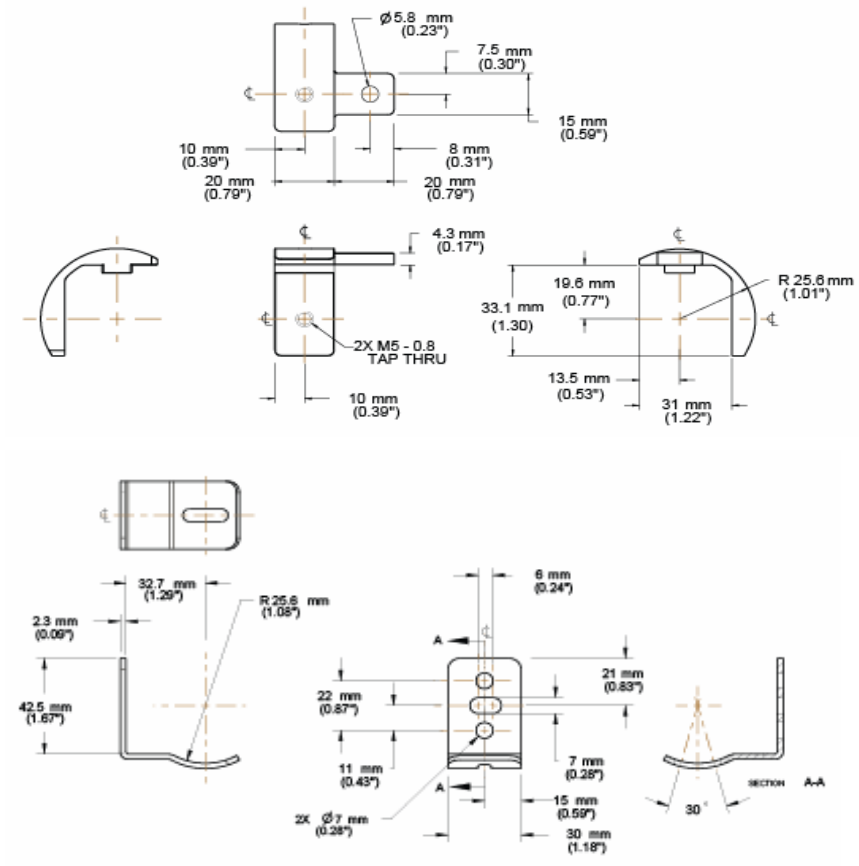

Figure 1. Mounting Bracket Dimensions

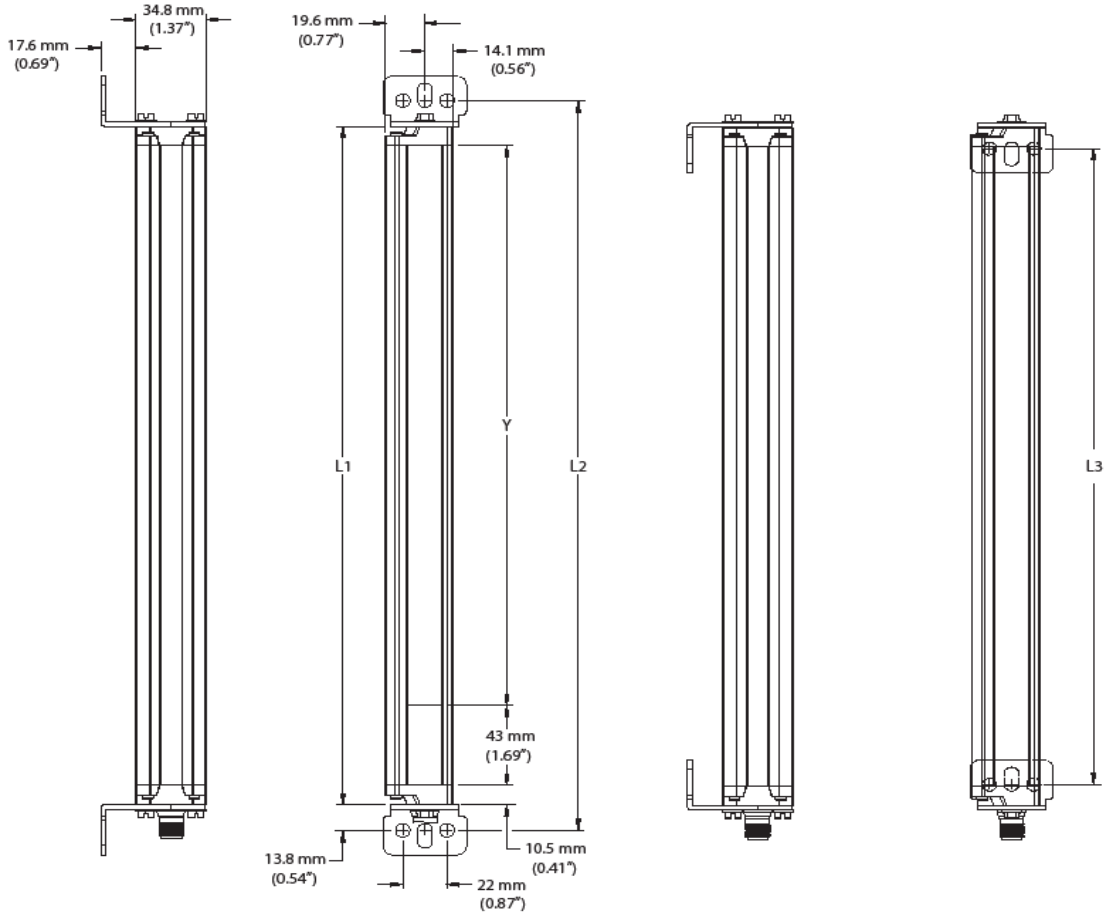

Emitter or Receiver Model	Housing Length	Distance Between Bracket Holes		Defined Area†
	L1	L2	L3	Y
LS2HD..150	216 mm (8.5")	243.6 mm (9.6")	193 mm (7.6")	150 mm (5.9")
LS2HD..300	366 mm (14.4")	393.6 mm (15.5")	343 mm (13.5")	300 mm (11.8")
LS2HD..450	516 mm (20.3")	543.6 mm (21.4")	493 mm (19.4")	450 mm (17.7")
LS2HD..600	666 mm (26.2")	693.6 mm (27.3")	643 mm (25.3")	600 mm (23.6")
LS2HD..750	816 mm (32.1")	843.6 mm (33.2")	793 mm (31.2")	750 mm (29.5")
LS2HD..900	965 mm (38.0")	992.6 mm (39.1")	942 mm (37.1")	900 mm (35.4")
LS2HD..1050	1115 mm (43.9")	1142.6 mm (45.0")	1092 mm (43.0")	1050 mm (41.3")
LS2HD..1200	1265 mm (49.8")	1292.6 mm (50.9")	1242 mm (48.9")	1200 mm (47.2")
LS2HD..1350	1415 mm (55.7")	1442.6 mm (56.8")	1392 mm (54.8")	1350 mm (53.1")
LS2HD..1500	1564 mm (61.6")	1591.6 mm (62.7")	1541 mm (60.7")	1500 mm (59.1")
LS2HD..1650	1714 mm (67.5")	1741.6 mm (68.6")	1691 mm (66.6")	1650 mm (65.0")
LS2HD..1800	1864 mm (73.4")	1891.6 mm (74.5")	1841 mm (72.5")	1800 mm (70.9")

† Nominal Measurement

Figure 2. Mounting Dimensions

EZ-SCREEN Type 2 Heavy Duty
Standard End-Cap Mounting Hardware
(supplied with each emitter and receiver)

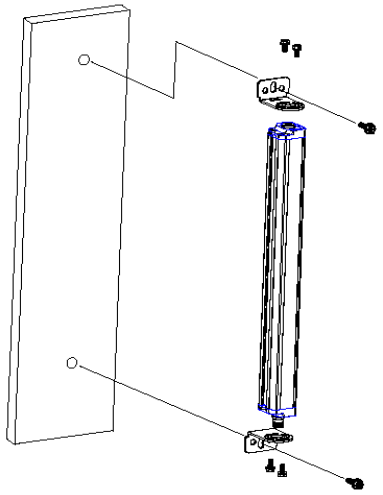

Sensors are designed to be mounted with up to 600 mm unsupported distance between brackets (see Section 3.2.1 in manual p/n 122452 and center mounting bracket information at right).

Supplied Brackets:
150 mm - 600 mm long: 2 End Brackets each
750 mm - 1050 mm long: 2 End Brackets + 1 Center Bracket each
1200 mm - 1800 mm long: 2 End Brackets + 2 Center Brackets each

Center Bracket Hardware:

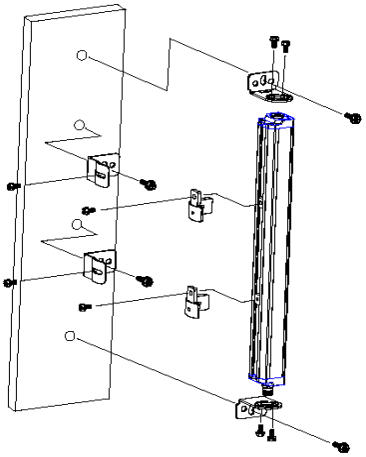

NOTES:

Brackets are designed to mount directly to MSA series stands (Section 2.3 in manual p/n 122452), using the hardware supplied with the stands.

Figure 3. Sensor Mounting

Center Mounting Brackets must be used with longer sensors, whenever the sensors are subject to shock or vibration. In such situations, the sensors are designed to be mounted with up to 600 mm (23.6") distance between brackets. Sensors 750 mm to 1050 mm (29.5" to 41.3") long are supplied with one center bracket, which should be centered on the sensor. Longer sensors are supplied with two center mounting brackets, which should be positioned 1/3 of the sensor's length from each sensor end (see Figure 3).

1. Place the T-nut in the side slot of the sensor housing.
2. Fasten the cylindrical inner bracket to the T-nut using the M5-0.8x10 screw provided.
3. Fasten the curved outer mounting bracket to the inner bracket using M5-0.8x10 screw provided.
4. Loosen all the mounting bracket screws to the sensor, align the sensors and then tighten the end screws. Finally tighten the M5 screws of the center mounting bracket parts.

WARRANTY: Banner Engineering Corp. warrants its products to be free from defects for one year. Banner Engineering Corp. will repair or replace, free of charge, any product of its manufacture found to be defective at the time it is returned to the factory during the warranty period. This warranty does not cover damage or liability for the improper application of Banner products. This warranty is in lieu of any other warranty either expressed or implied.

P/N 141321 Rev A

Banner Engineering Corp., 9714 Tenth Ave. No., Minneapolis, MN USA 55441 • Phone 763.544.3164 • www.bannerengineering.com • Email : sensors@bannerengineering.com