NOTE: Thread bosses use #10 x 3/8 Trilobular thread forming screw

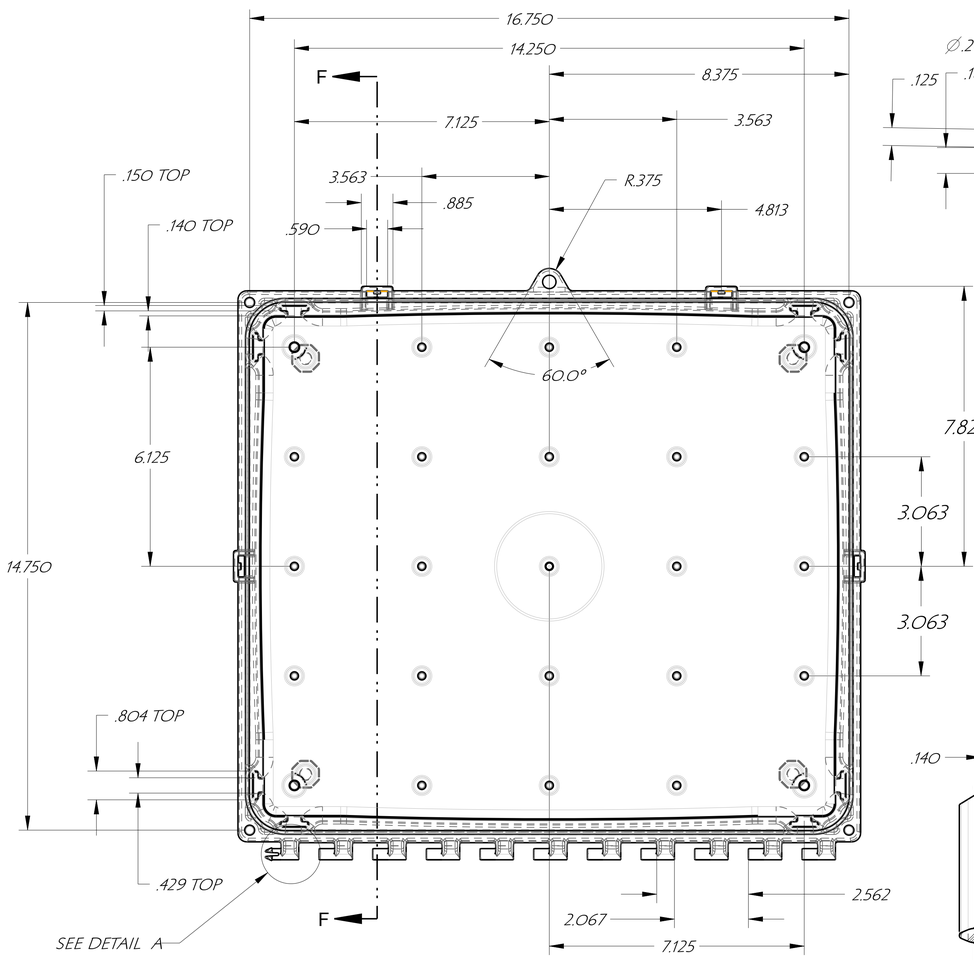

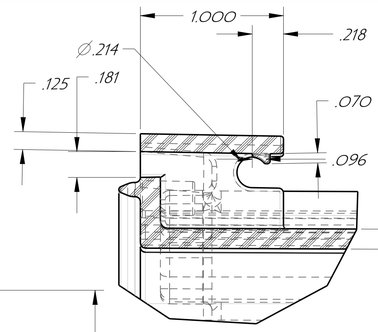

DETAIL C
SCALE 2.000

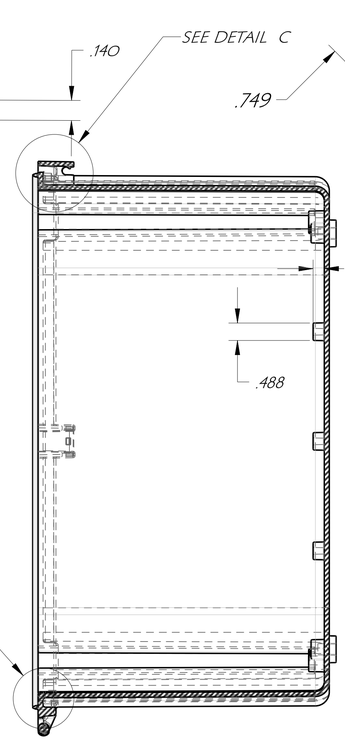

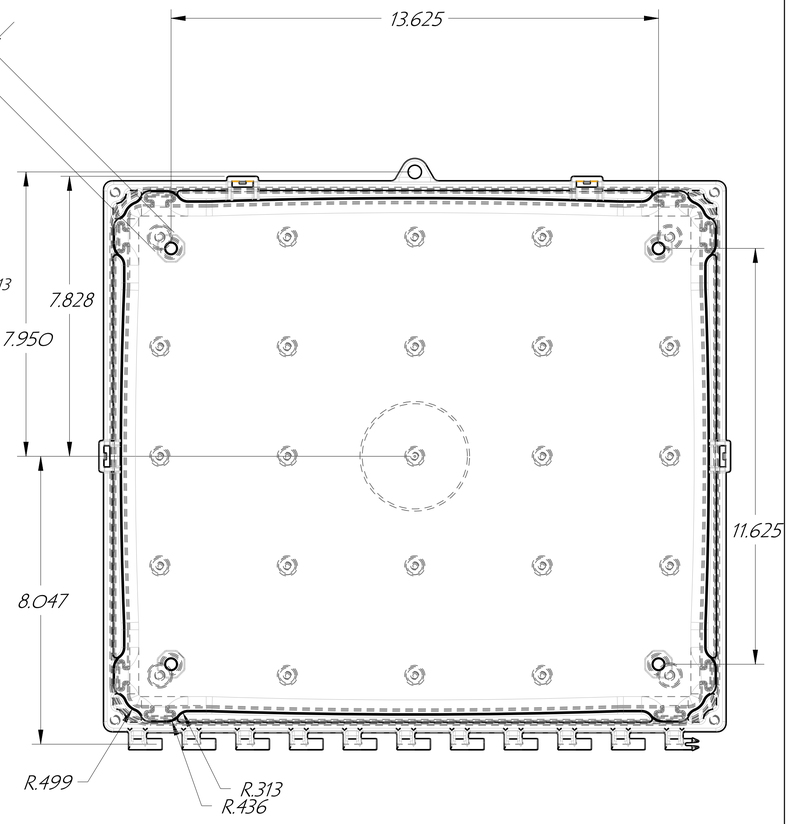

SECTION F-F

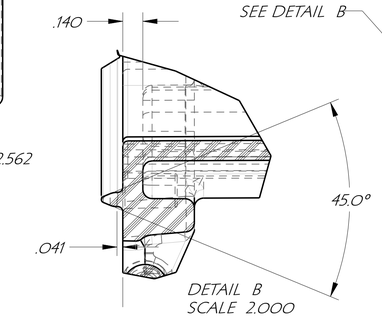

DETAIL B
SCALE 2.000

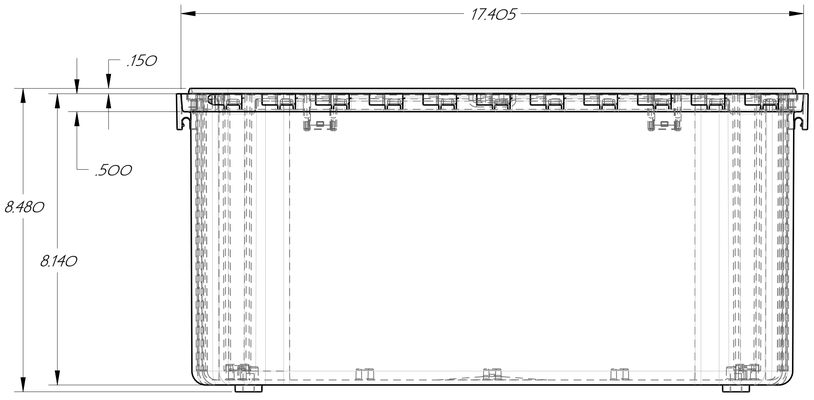

16 X 14 ENCLOSURE

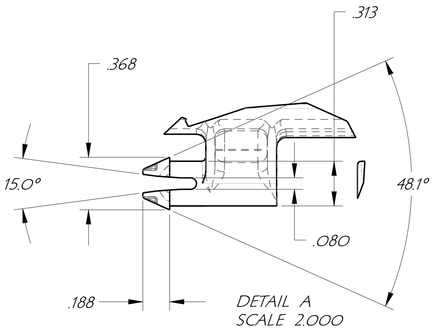

DETAIL A
SCALE 2.000

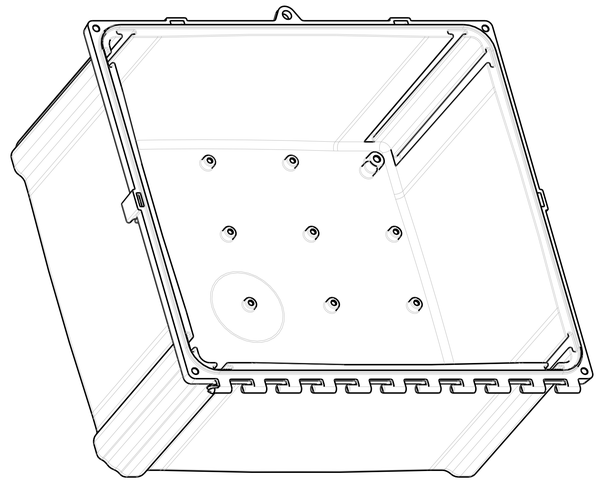

SCALE 0.375

DES. C.R.W.	DRN. C.R.W.	CHKD.			
APP.	DATE 10/16/07	SCALE			
TOLERANCES:	2 PLACE DEC. ±.010	FRAC. ±1/64	ATTABOX	CUSTOMER	
UNLESS OTHERWISE SHOWN	3 PLACE DEC. ±.005		PART NAME ENCLOSURE & LID	PART NO.	PART MAT'L POLYCARBONATE
	4 PLACE DEC. ±.0005		TOOL DESC. SINGLE CAVITY INJECTION MOLD	SHRINK .006/IN.	SHEET OF

ПРОМЭЛЕКТРОНИКА/ sales@prom-elec.com

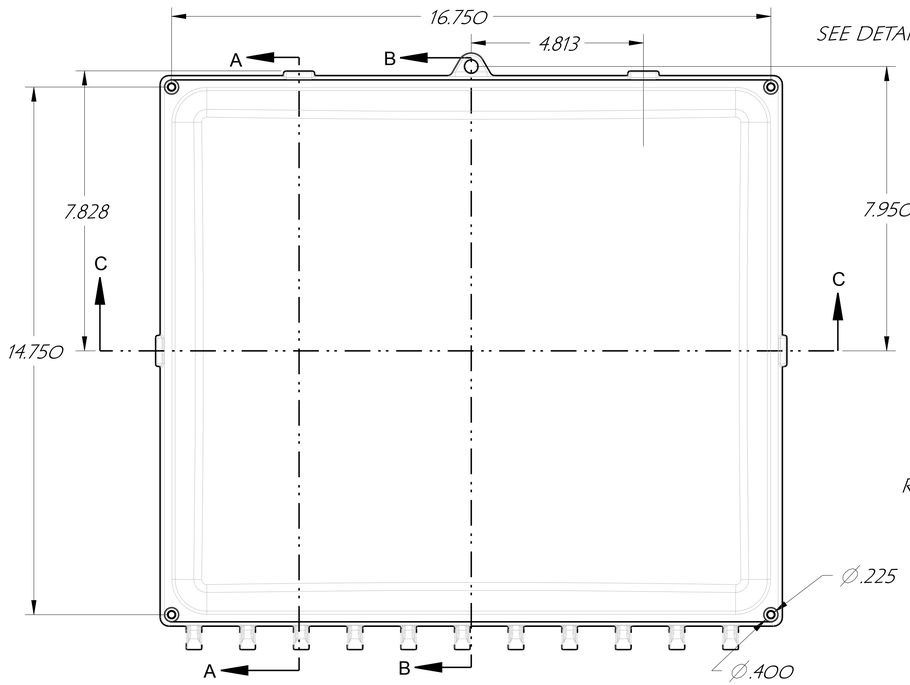

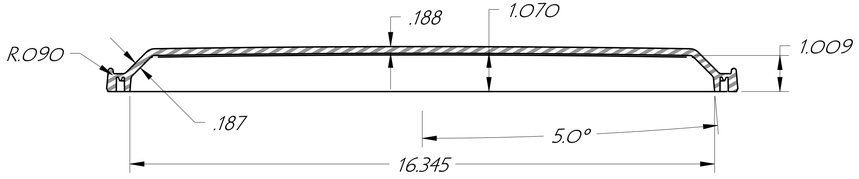

SECTION C-C

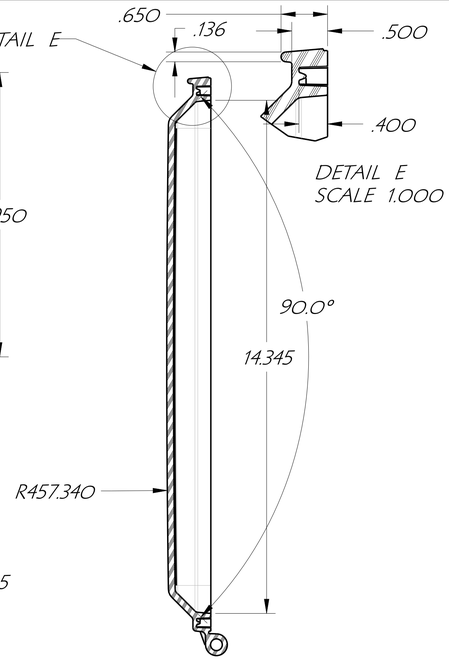

DETAIL E
SCALE 1.000

SECTION A-A

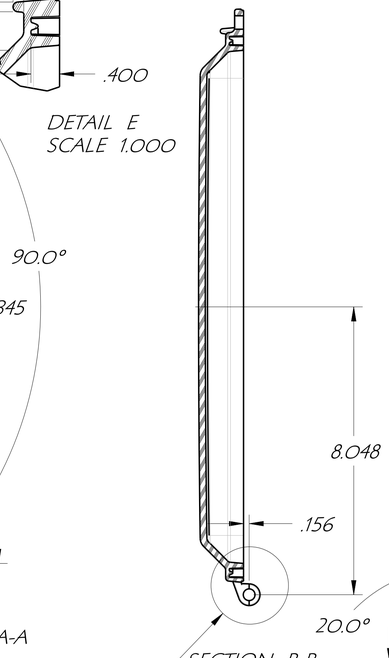

SECTION B-B

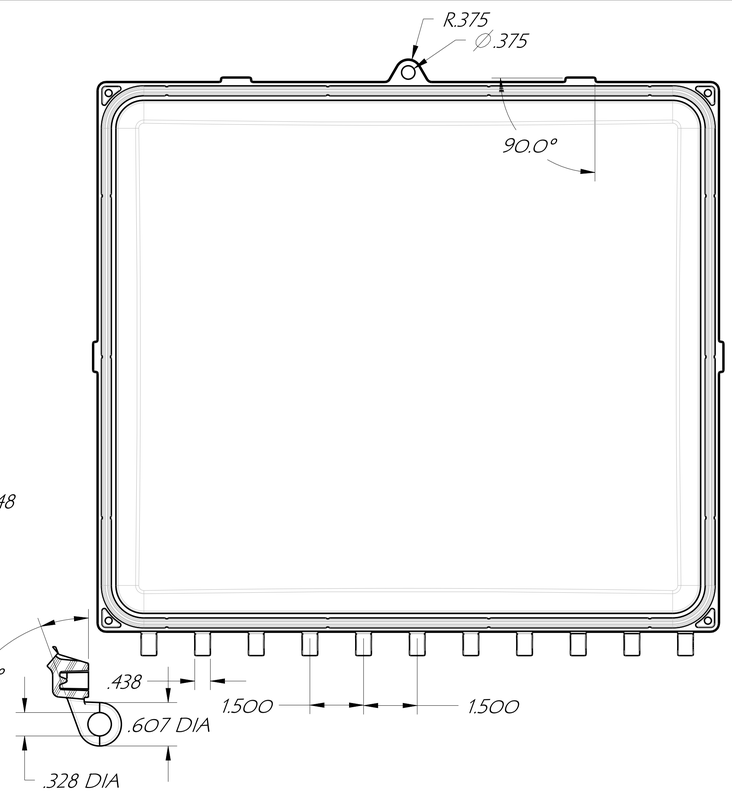

DETAIL F
SCALE 1.000

16 X 14 LID

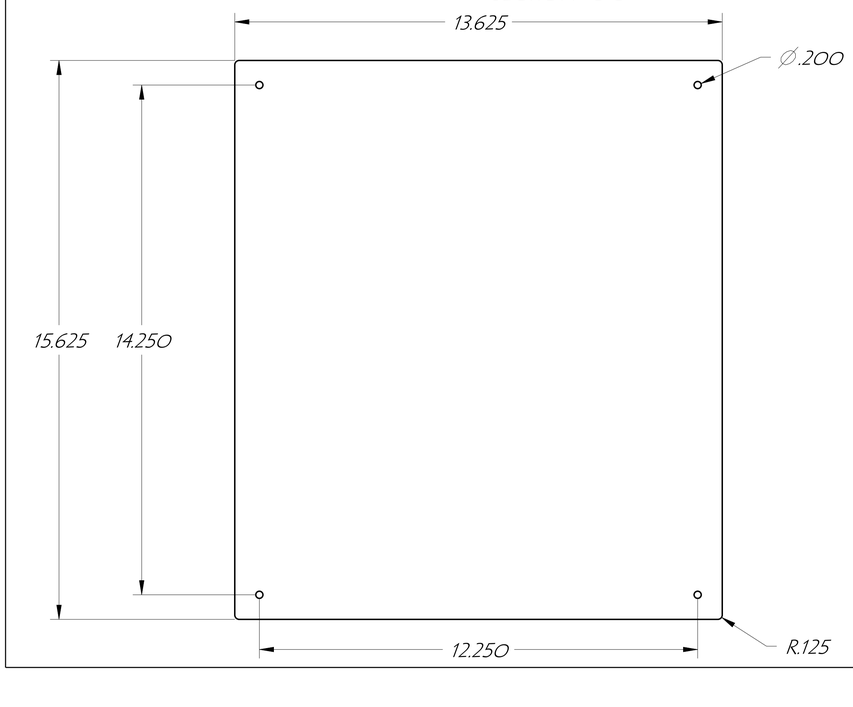

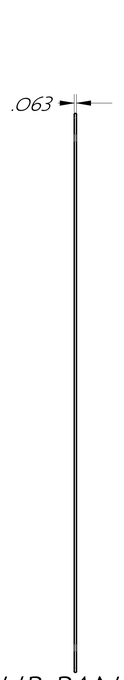

SUB PANEL OR SWING PANEL

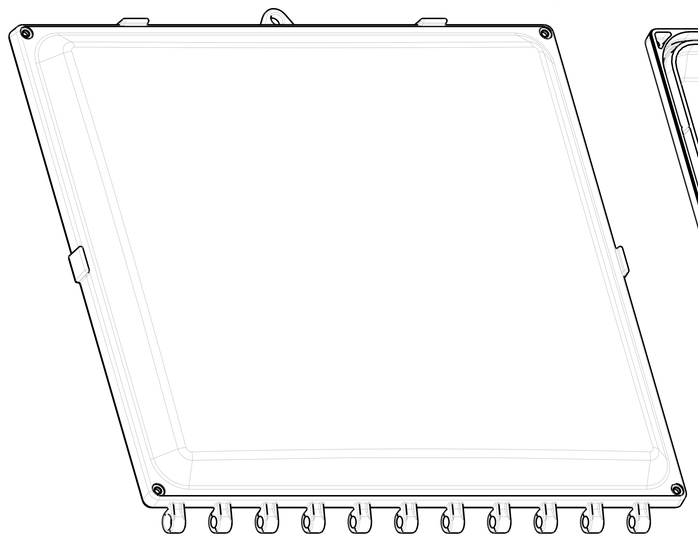

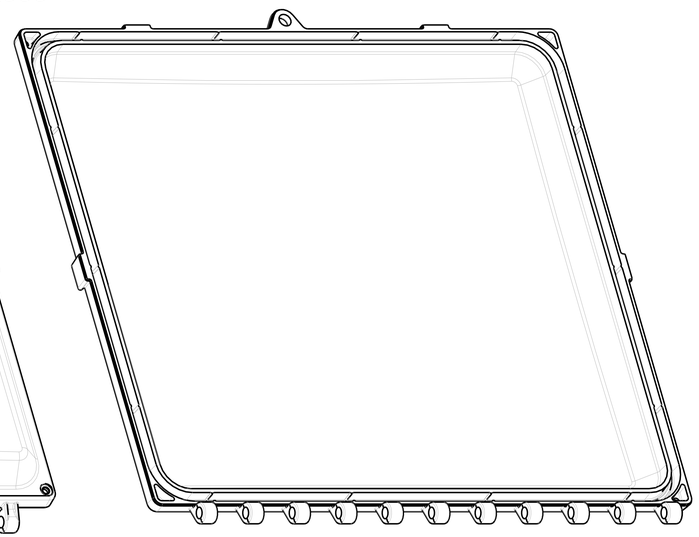

DES. C.R.W.	DRN. C.R.W.	CHKD.			
APP.	DATE 10/16/07	SCALE			
TOLERANCES:	2 PLACE DEC. ±.010	FRAC. ±1/64	ATTABOX		CUSTOMER
UNLESS OTHERWISE SHOWN	3 PLACE DEC. ±.005		PART NAME ENCLOSURE & LID	PART NO.	PART MAT'L POLYCARBONATE
	4 PLACE DEC. ±.0005		TOOL DESC. SINGLE CAVITY INJECTION MOLD	SHRINK .006/IN.	SHEET OF

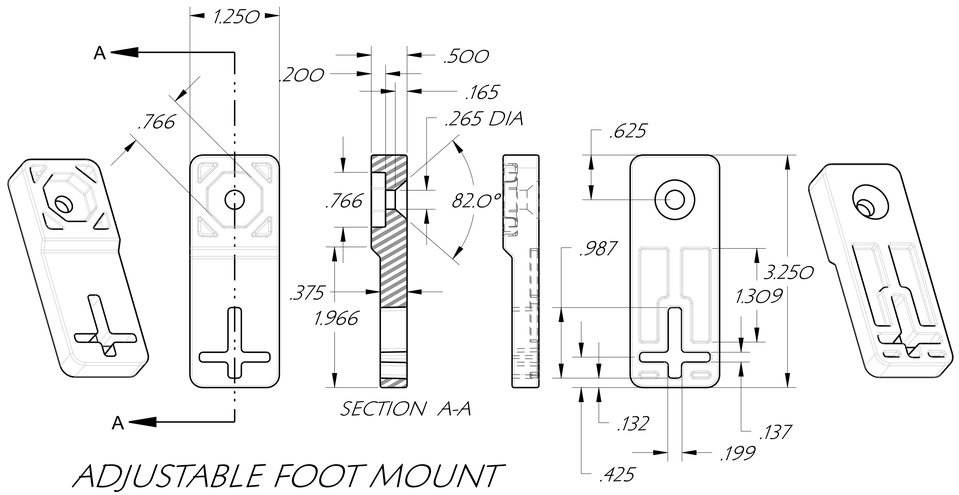

ADJUSTABLE FOOT MOUNT



LID HINGE CAP

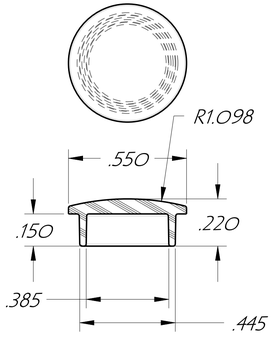

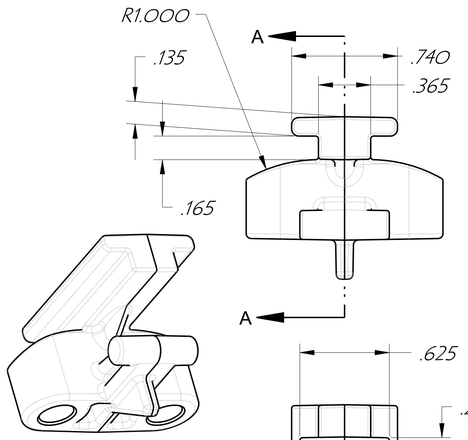

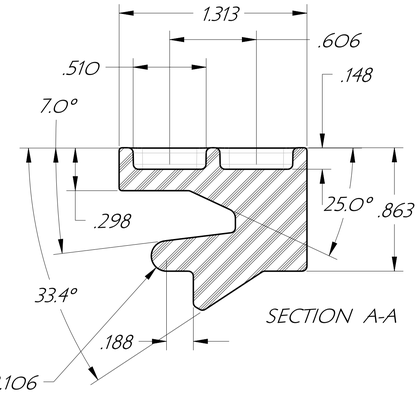

FLUSH PANEL MOUNT

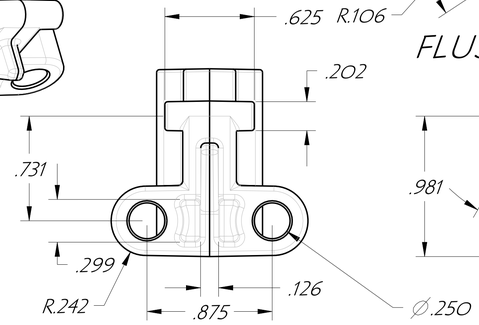

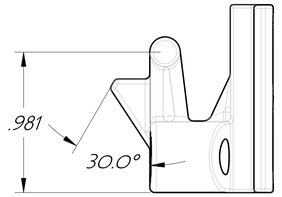

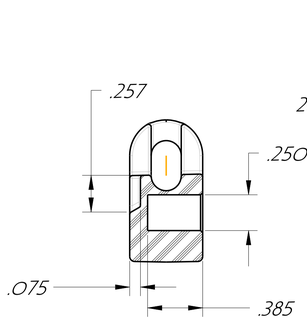

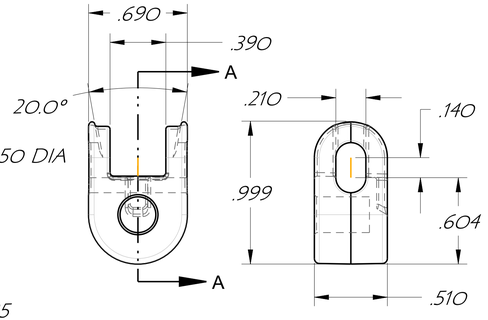

RETRACTING PANEL HINGE



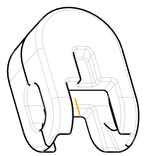

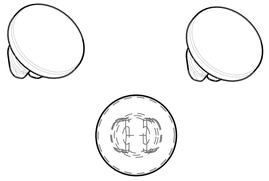

PLUG

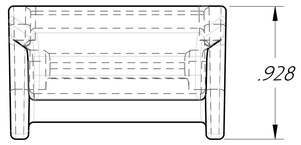

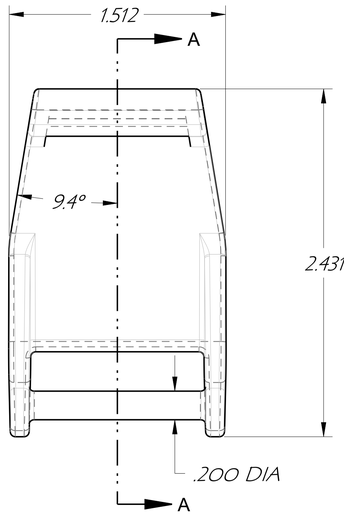

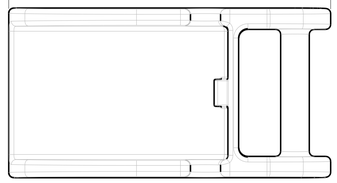

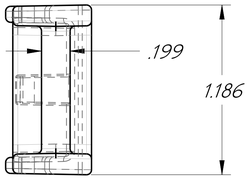

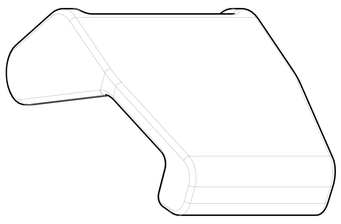

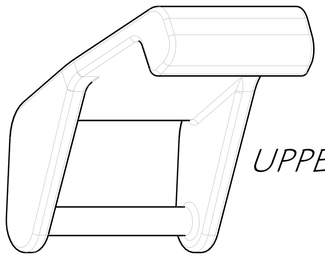

UPPER LATCH

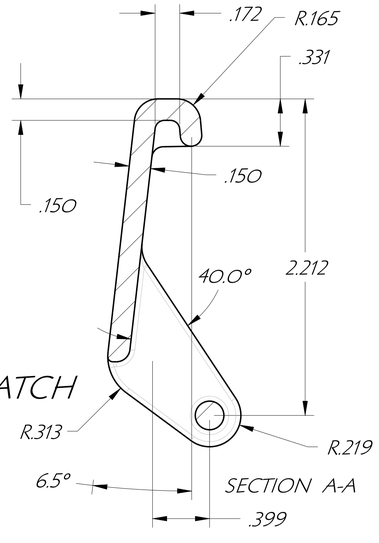

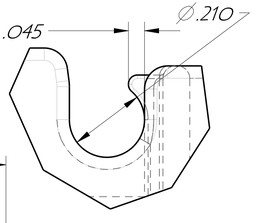

LOWER LATCH

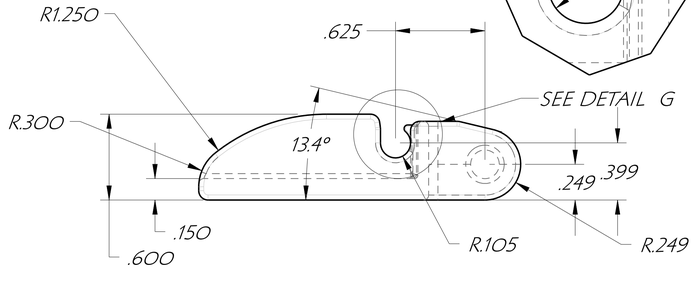

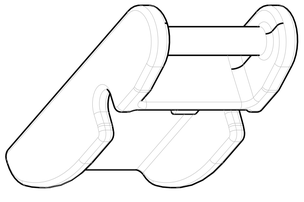

DES. C.R.W.	DRN. C.R.W.	CHKD.	ATTABOX		CUSTOMER
APP.	DATE 10/16/07	SCALE			
TOLERANCES:	2 PLACE DEC. ±.010	FRAC. ±1/64	PART NAME ENCLOSURE & LID	PART NO.	PART MAT'L POLYCARBONATE
UNLESS OTHERWISE SHOWN	3 PLACE DEC. ±.005 4 PLACE DEC. ±.0005		TOOL DESC. SINGLE CAVITY INJECTION MOLD	SHRINK .006/IN.	SHEET OF