LTF Time of Flight Laser Distance Sensor with IO-Link Product Manual

Original Instructions
p/n: 195393 Rev. L
23-Jul-26
© Banner Engineering Corp. All rights reserved. www.bannerengineering.com

ПРОМЭЛЕКТРОНИКА/ sales@prom-elec.com

Contents

Chapter 1 Product Description 4
LTF with IO-Link Models 4
LTF Overview 4
Features and Indicators 5
Display 5
Buttons and Icons 5
Specifications 6
Class 2 Laser Description and Safety Information 7
FCC Part 15 Class A for Unintentional Radiators 8
Industry Canada ICES-003(A) 8
Repeatability Performance 8
Dimensions 10

Chapter 2 Sensor Installation 11
Mount the Device 11
Wiring Diagrams 11
Connecting to RSD1 11

Chapter 3 Sensor Programming 13
Quick Menu 13
LTF Sensor Menu (MENU) 14
Remote Input 14
Locking and Unlocking the Sensor 16
Discrete Output Menu 16
Two-Point TEACH 17
Midpoint TEACH 19
Adjust Switch Point One 21
Adjust Switch Point Two 21
TEACH Switch Point 21
Adjust Switch Point 22
Mode 22
Switch Point Reference (SPtRef) 23
Switch Point TEACH Offset 24
Switch Point Hysteresis 24
Timer 25
Polarity 26
Input Menu (INPUT) 26
Input Type 26
Input Active 27
Measure Menu (MEASURE) 27
Speed 27
Display Menu (DISPLAY) 28
Units 28
Zero and Shift 29
View 30
Sleep 31
Information Menu (INFO) 31
Reset Menu (RESET) 31
Factory Default Settings 32

Chapter 4 IO-Link Interface 33

Chapter 5 Sync Master/Slave 34

Chapter 6 Additional Remote TEACH Procedures 35
TEACH Both Discrete Output Switch Points Together 35
TEACH Both Discrete Output Midpoints Together 36

Chapter 7 Accessories 37
Cordsets 37
Brackets 38
RSD1 Remote Display 38

© Banner Engineering Corp. All rights reserved. www.bannerengineering.com

Chapter 8 Product Support and Maintenance 40
Sensor Menu Full Map 40
Troubleshooting 41
Repairs 41
Contact Us 41
Banner Engineering Corp Limited Warranty 41

© Banner Engineering Corp. All rights reserved. www.bannerengineering.com

Chapter 1 Product Description

Laser distance sensor with dual discrete (switched) outputs and IO-Link.

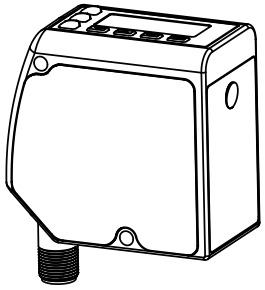

- High performance time of flight measurement
- Up to 24 m range
- Reliably detects challenging targets
- Fast set up with intuitive interface

WARNING:

- **Do not use this device for personnel protection**
- Using this device for personnel protection could result in serious injury or death.
- This device does not include the self-checking redundant circuitry necessary to allow its use in personnel safety applications. A device failure or malfunction can cause either an energized (on) or de-energized (off) output condition.

LTF with IO-Link Models

Family	Range (m)	Output	Laser Class	Sensing Mode	Connector
LTF	12	K	C2	LD	Q
	12 = 12 m **24** = 24 m	**K** = (2) NPN/PNP discrete with I/O Link	**C2** = Class 2	**LD** = Laser diffuse	**Q** = Rotatable M12 QD **QP** = PVC 150 mm cable with M12 QD

QD models require mating cordset

LTF Overview

The LTF Time of Flight Laser Distance Sensor with IO-Link is designed for precise, long-distance measurements. A 2-line LCD shows the real-time distance measurement, in either millimeters or inches, when the sensor is in Run mode.

See "Factory Default Settings" on page 32 for a list of sensor default settings.

Models with current or voltage analog outputs are available.

© Banner Engineering Corp. All rights reserved.
www.bannerengineering.com

Features and Indicators

Features

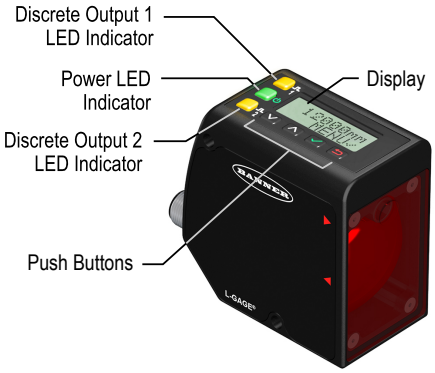

Three LED indicators provide ongoing indication of the sensing status.

Power LED Indicator

Solid Green = Normal operation, power On and laser On
Flashing Green (1 Hz) = Power On and laser Off (laser enable mode)

Discrete Output LED Indicators

Solid Amber = Discrete Output is On
Off = Discrete Output is Off

Display

Display shown in Run Mode



The display is a 2-line, 8-character LCD. The main screen is the Run mode screen, which shows the real-time distance measurement.

Buttons and Icons

Use the sensor buttons **Down**, **Up**, **Enter**, and **Escape** to program the sensor and to access sensor information.

Down and Up Buttons

Press **Down** and **Up** to:

- Access the Quick Menu from Run mode
- Navigate the menu systems
- Change programming settings
- Change individual digit values in distance based settings

When navigating the menu systems, the menu items loop.

Enter Button

Press **Enter** to:

- Access the Sensor Menu from Run mode
- Access the submenus
- Move right one digit in distance based settings
- Save changes

In the Sensor Menu, a checkmark ⋰ in the lower right corner of the display indicates that pressing **Enter** accesses a submenu.

Press **Enter** to save changes. New values flash rapidly and the sensor returns to the parent menu.

Continued on page 6

© Banner Engineering Corp. All rights reserved.
www.bannerengineering.com

Continued from page 5

Escape Button

Press **Escape** to:

- Leave the current menu and return to the parent menu
- Return to Run mode from the Quick Menu

IMPORTANT: Pressing **Escape** discards any unsaved programming changes.

In the Sensor Menu, a return arrow in the upper left corner of the display indicates that pressing **Escape** returns to the parent menu.

Press and hold **Escape** for 2 seconds to return to Run mode from any menu or remote teach.

A lock symbol displays in the upper left corner of the display to indicate when the sensor is locked.

Specifications

Supply Voltage

12 V DC to 30 V DC

Use only with a suitable Class 2 power supply (UL) or SELV power supply (CE)

Power and Current Consumption (Exclusive of Load)

Normal Run Mode: < 2.1 W

Current consumption < 85 mA at 24 V DC

Supply Protection Circuitry

Protected against reverse polarity and transient overvoltages

Construction

Die-cast zinc housing; acrylic window

Maximum Torque

2.6 N·m (23.0 in-lbs)

Sensing Beam

Visible red, 660 nm

Sensing Range – LTF12

90% White Target: 50 mm to 12000 mm

18% Gray Target: 50 mm to 11000 mm

6% Black Target: 50 mm to 7000 mm

Sensing Range – LTF24

90% White Target: 50 mm to 24000 mm

18% Gray Target: 50 mm to 18000 mm

6% Black Target: 50 mm to 11000 mm

Ambient Light Immunity

> 40000 lux

Delay at Power Up

2 seconds

Measurement Output Rate

0.5 ms

Output Configuration

User configurable to dual discrete NPN or dual discrete PNP; the NPN/PNP polarity menus change both outputs

Output Ratings

Discrete Output: 100 mA maximum (protected against continuous overload and short circuit)

OFF-state leakage current (PNP): < 10 µA at 30 V

OFF-state leakage current (NPN): < 200 µA at 30 V

Output saturation voltage (PNP outputs): < 3 V at 100 mA

Output saturation voltage (NPN outputs): < 1.6 V at 100 mA

Remote Input

Allowable Input Voltage Range: 0 to Vcc

Active Low (internal weak pullup—sinking current): High State > 4.3 V at 740 µA maximum; Low State < 1.3 V at 800 µA maximum

Active High (internal weak pulldown—sourcing current): High State > 4.3 V at 1.7 mA maximum; Low State < 1.3 V at 1.6 mA maximum

IO-Link Interface

Supports Smart Sensor Profile: Yes

Baud Rate: 38400 bps

Process Data Widths: 32 bits

IODD files: Provides all programming options of the display, plus additional functionality. See p/n 199517 for IO-Link reference information.

Minimum Window Size

10 mm

Boresighting

100 mm radius at 12000 mm

Temperature Effect

50 mm to 12000 mm: ±0.25 mm/°C (typical)

>12000 mm: ±0.5 mm/°C (typical)

Resolution

LTF12: < 0.3 mm to 3 mm

LTF24: < 0.3 mm to 4 mm

Resolution measured as twice repeatability with white target at slow response speed at 20 °C. See repeatability curves for more detail.

Beam Spot Size

6.5 mm at 50 mm

10 mm at 7500 mm

12.5 mm at 12000 mm

35 mm at 24000 mm

Beam spot size is calculated as 1.6 times the D4σ measured diameter

Response Time

Fast: 1.5 ms

Standard: 8 ms

Medium: 32 ms

Slow: 256 ms

© Banner Engineering Corp. All rights reserved.

Storage Conditions
–30 °C to +65 °C (–22 °F to +149 °F)

Operating Conditions
–20 °C to +55 °C (–4 °F to +131°F)
90% at +55 °C maximum relative humidity (non-condensing)

Shock
MIL-STD-202G, Method 213B, Condition I (100G 6x along X, Y, and Z axes, 18 shocks), with device operating

Advanced Capabilities
PULSE® PRO I/O

Certifications
Banner Engineering BV
Park Lane, Culliganlaan 2F bus 3
1831 Diegem, BELGIUM

Turck Banner LTD Blenheim House
Blenheim Court
Wickford, Essex SS11 8YT
GREAT BRITAIN

c UL us LISTED Industrial Control Equipment 3TJJ

Linearity/Accuracy

Reflectance	LTF12		LTF24		
	±10 mm	±25 mm	±25 mm	±50 mm	±100 mm
6% Black Card	4 m	7 m	7 m	8 m	11 m
18% Gray Card	7 m	11 m	11 m	13 m	18 m
90% White Card	12 m	-	24 m	-	-

Repeatability
See "Repeatability Performance" on page 8

Environmental Rating
IP67

Vibration
MIL-STD-202G, Method 201A (Vibration: 10 Hz to 55 Hz, 0.06 inch (1.52 mm) double amplitude, 2 hours each along X, Y and Z axes), with device operating

Application Note
For optimum performance, allow 15 minutes for the sensor to warm up

Required Overcurrent Protection

WARNING: Electrical connections must be made by qualified personnel in accordance with local and national electrical codes and regulations.

Overcurrent protection is required to be provided by end product application per the supplied table.

Overcurrent protection may be provided with external fusing or via Current Limiting, Class 2 Power Supply.

Supply wiring leads < 24 AWG shall not be spliced.

For additional product support, go to www.bannerengineering.com.

Supply Wiring (AWG)	Required Overcurrent Protection (A)	Supply Wiring (AWG)	Required Overcurrent Protection (A)
20	5.0	26	1.0
22	3.0	28	0.8
24	2.0	30	0.5

Class 2 Laser Description and Safety Information



Laser light. Do not stare into the beam.

Complies with 21 CFR 1040.10 and 1040.11 except for deviations pursuant to Laser Notice No. 56, dated May 8, 2019.

CLASS 2
LASER PRODUCT

CAUTION:
- **Never stare directly into the sensor lens.**
- Laser light can damage your eyes.
- Avoid placing any mirror-like object in the beam. Never use a mirror as a retroreflective target.

CAUTION:
- **Return defective units to the manufacturer.**
- Use of controls or adjustments or performance of procedures other than those specified herein may result in hazardous radiation exposure.
- Do not attempt to disassemble this sensor for repair. A defective unit must be returned to the manufacturer.

Class 2 lasers are lasers that emit visible radiation in the wavelength range from 400 nm to 700 nm, where eye protection is normally afforded by aversion responses, including the blink reflex. This reaction may be expected to provide adequate

© Banner Engineering Corp. All rights reserved.
www.bannerengineering.com

protection under reasonably foreseeable conditions of operation, including the use of optical instruments for intrabeam viewing.

Complies with IEC 60825-1:2014 and EN 60825-1:2014+A11:2021.

Class 2 Laser Safety Notes. Low-power lasers are, by definition, incapable of causing eye injury within the duration of a blink (aversion response) of 0.25 seconds. They also must emit only visible wavelengths (400 nm to 700 nm). Therefore, an ocular hazard may exist only if individuals overcome their natural aversion to bright light and stare directly into the laser beam.

Class 2 Laser Characteristics

Output power: ≤ 0.91 mW
Laser wavelength: 660 nm

FCC Part 15 Class A for Unintentional Radiators

This equipment has been tested and found to comply with the limits for a Class A digital device, pursuant to Part 15 of the FCC Rules. These limits are designed to provide reasonable protection against harmful interference when the equipment is operated in a commercial environment. This equipment generates, uses, and can radiate radio frequency energy and, if not installed and used in accordance with the instruction manual, may cause harmful interference to radio communications. Operation of this equipment in a residential area is likely to cause harmful interference in which case the user will be required to correct the interference at his own expense.

(Part 15.21) Any changes or modifications not expressly approved by the party responsible for compliance could void the user's authority to operate this equipment.

Industry Canada ICES-003(A)

This device complies with CAN ICES-3 (A)/NMB-3(A). Operation is subject to the following two conditions: 1) This device may not cause harmful interference; and 2) This device must accept any interference received, including interference that may cause undesired operation.

Cet appareil est conforme à la norme NMB-3(A). Le fonctionnement est soumis aux deux conditions suivantes : (1) ce dispositif ne peut pas occasionner d'interférences, et (2) il doit tolérer toute interférence, y compris celles susceptibles de provoquer un fonctionnement non souhaité du dispositif.

Repeatability Performance

LTF12 Models

Speed: Slow (256 ms)

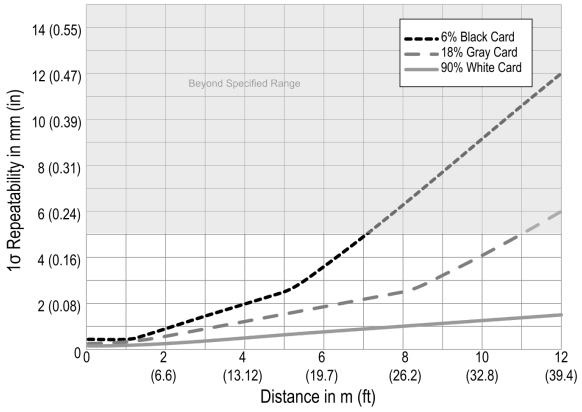

Speed: Medium (32 ms)

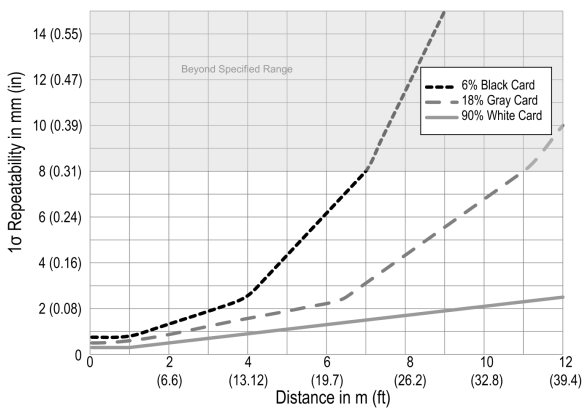

Continued on page 9

© Banner Engineering Corp. All rights reserved.
www.bannerengineering.com

Continued from page 8

LTF12 Models

Speed: Standard (8 ms)

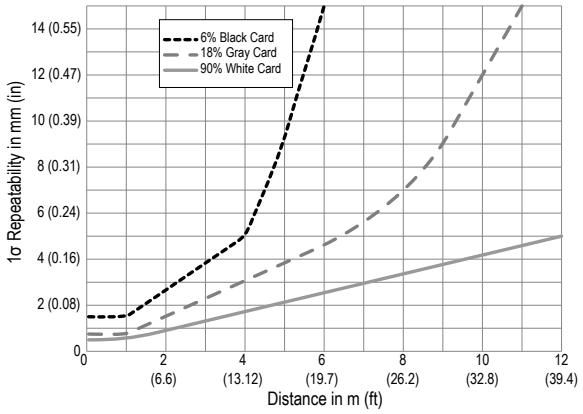

Speed: Fast (1.5 ms)

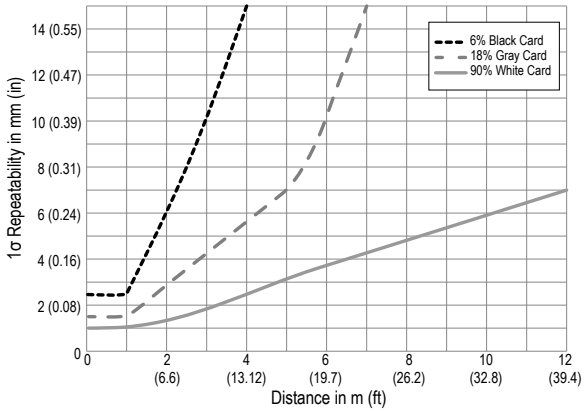

LTF24 Models

Speed: Slow (256 ms)

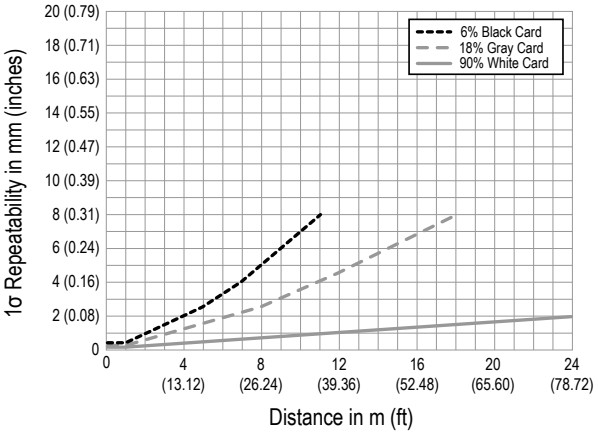

Speed: Medium (32 ms)

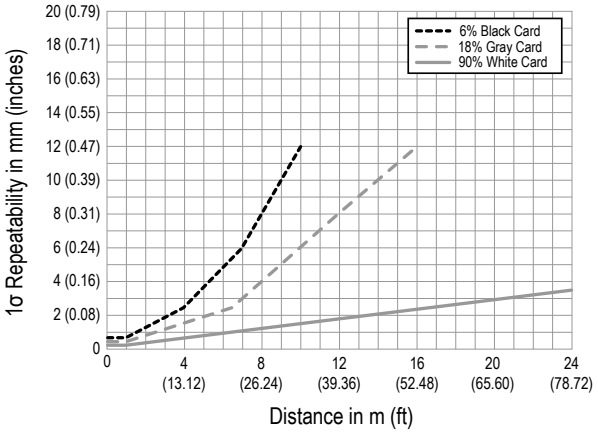

Speed: Standard (8 ms)

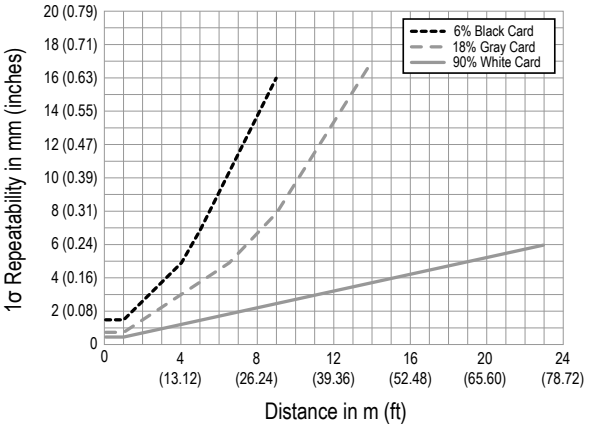

Speed: Fast (1.5 ms)

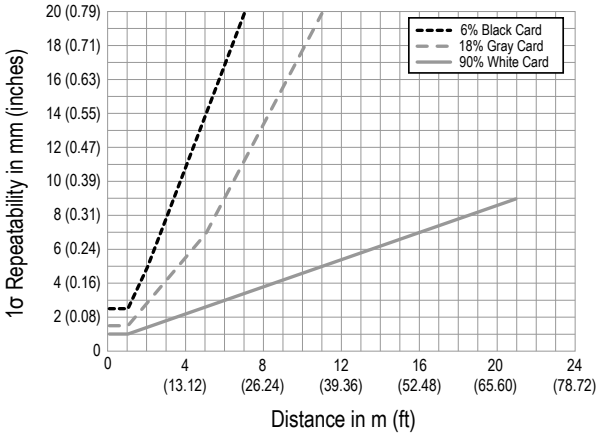

© Banner Engineering Corp. All rights reserved.
www.bannerengineering.com

Dimensions

All measurements are listed in millimeters [inches], unless noted otherwise. The measurements provided are subject to change.

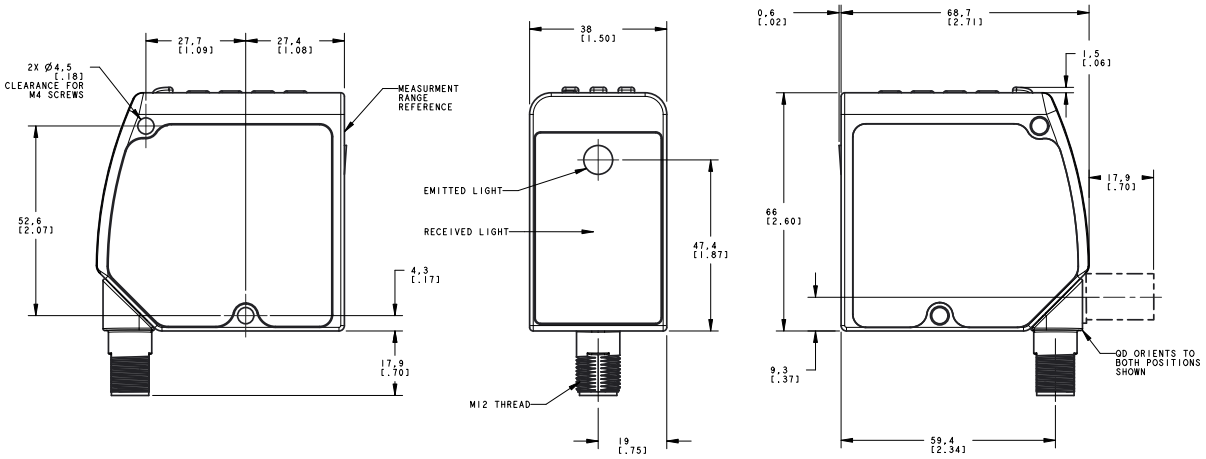

© Banner Engineering Corp. All rights reserved.
www.bannerengineering.com

Chapter 2 Sensor Installation

NOTE: Handle the sensor with care during installation and operation. Sensor windows soiled by fingerprints, dust, water, oil, etc. may create stray light that may degrade the peak performance of the sensor. Blow the window clear using filtered, compressed air, then clean as necessary using 70% isopropyl alcohol and cotton swabs or water and a soft cloth.

Mount the Device

1. If a bracket is needed, mount the device onto the bracket.
2. Mount the device (or the device and the bracket) to the machine or equipment at the desired location. Do not tighten the mounting screws at this time.
3. Check the device alignment.
4. Tighten the mounting screws to secure the device (or the device and the bracket) in the aligned position.

Wiring Diagrams

IO-Link Models

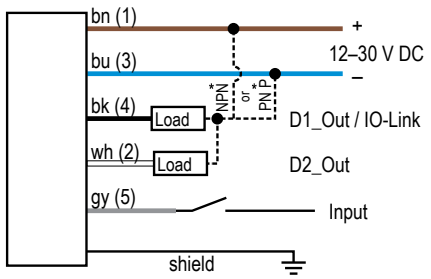

* User-configurable PNP/NPN setting

Key

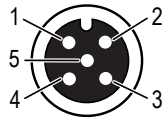

1 = Brown
2 = White
3 = Blue
4 = Black
5 = Gray

Connecting to RSD1

The following diagram depicts the connection of the LTF to the optional RSD1 accessory.

LTF to RSD1

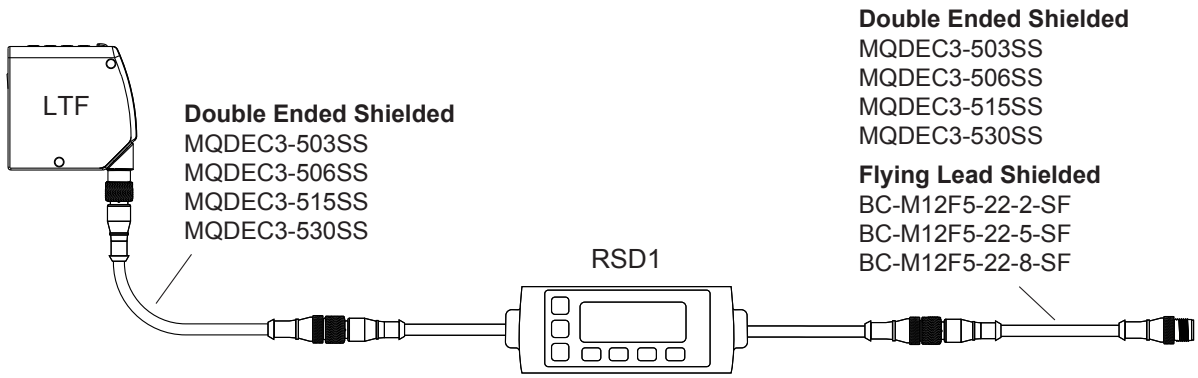

© Banner Engineering Corp. All rights reserved.
www.bannerengineering.com

Use these cordsets to connect the RSD1 to the LTF sensor or to other devices, such as PLC inputs, IO-Link masters, or control systems.

5-Pin Male Threaded and 5-Pin Female Quick Disconnect M12 Cordset with Shield—Double Ended

Model	Length "L1"	Style	Pinout (Male)	Pinout (Female)
MQDEC3-503SS	0.91 m (2.99 ft)	Female Straight/Male Straight	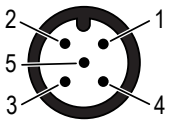	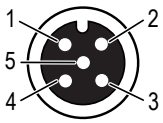
MQDEC3-506SS	1.83 m (6 ft)			
MQDEC3-515SS	4.58 m (15 ft)			
MQDEC3-530SS	9.2 m (30.2 ft)			
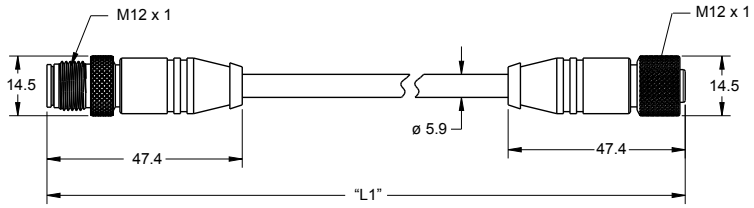			1 = Brown 2 = White 3 = Blue	4 = Black 5 = Gray

5-pin Single-Ended M12 Female Shielded Cordsets (datasheet p/n 236184)

Model	Length	Dimensions (mm)	Pinout (Female)	
BC-M12F5-22-1-SF	1 m (3.28 ft)	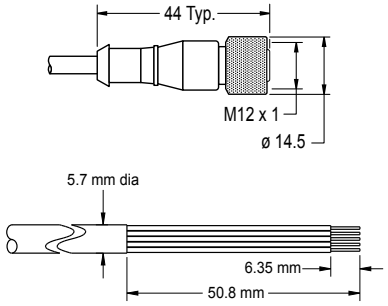	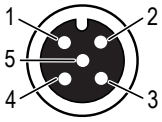	1 = Brown 2 = White 3 = Blue 4 = Black 5 = Gray
BC-M12F5-22-2-SF	2 m (6.56 ft)			
BC-M12F5-22-5-SF	5 m (16.4 ft)			
BC-M12F5-22-8-SF	8 m (26.25 ft)			
BC-M12F5-22-10-SF	10 m (30.81 ft)			
BC-M12F5-22-15-SF	15 m (49.2 ft)			

5-pin Single-Ended M12 Female Right-Angle Shielded Cordsets (datasheet p/n 236184)

Model	Length	Dimensions (mm)	Pinout (Female)	
BC-M12F5A-22-1-SF	1 m (3.28 ft)	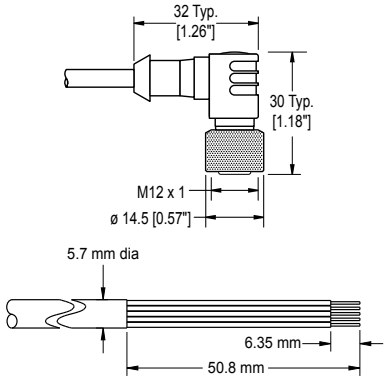	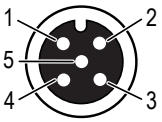	1 = Brown 2 = White 3 = Blue 4 = Black 5 = Gray
BC-M12F5A-22-2-SF	2 m (6.56 ft)			
BC-M12F5A-22-5-SF	5 m (16.4 ft)			
BC-M12F5A-22-8-SF	8 m (26.25 ft)			
BC-M12F5A-22-10-SF	10 m (30.81 ft)			
BC-M12F5A-22-15-SF	15 m (49.2 ft)			

© Banner Engineering Corp. All rights reserved.
www.bannerengineering.com

Chapter 3 Sensor Programming

Program the sensor using the buttons on the sensor or the remote input (limited programming options).

From Run mode, use the buttons to access the Quick Menu and the Sensor Menu. See "Quick Menu" on page 13 and "LTF Sensor Menu (MENU)" on page 14 for more information on the options available from each menu. For TEACH options, follow the TEACH instructions.

In addition to programming the sensor, use the remote input to disable the buttons for security, preventing unauthorized or accidental programming changes. See "Remote Input" on page 14 for more information.

Accessing the menus

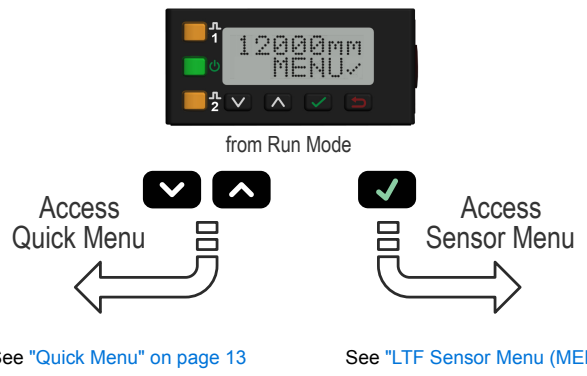

Quick Menu

The sensor includes a Quick Menu with easy access to view and change the discrete output switch points. Access the Quick Menu by pressing **Down** or **Up** from Run mode. When in the Quick Menu, the current distance measurement displays on the first line and the menu name and the discrete output switch points alternate on the second line of the display. Press **Enter** to access the switch points. Press **Down** and **Up** to change each digit. Press **Enter** to move right one digit. After reviewing each digit, press **Enter** again to save the new value and return to the Quick Menu. Press **Cancel** to ignore any changes made if only some digits have been changed.

Quick Menu Map (Window Mode)

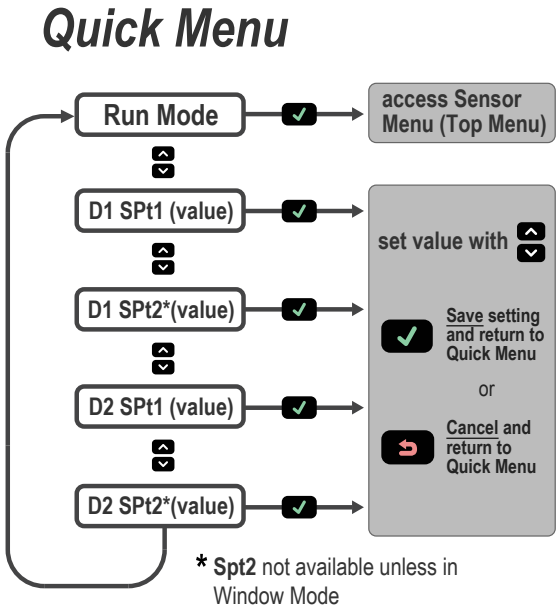

© Banner Engineering Corp. All rights reserved.
www.bannerengineering.com

LTF Sensor Menu (MENU)

Access the Sensor Menu by pressing **Enter** from Run mode. The Sensor Menu is also accessible from the Quick Menu: navigate to **MENU** and press **Enter**. The Sensor Menu includes several submenus that provide access to view and change sensor settings and to view sensor information.

Remote Input

Use the remote input to program the sensor remotely. The remove input is disabled by default. Activate remote input using the buttons to navigate to the Input Type menu option.

The remote input provides limited programming options and is Active Low by default. For Active Low, connect the gray input wire to ground (0 V DC), with a remote switch connected between the wire and ground. To use the Active High function, configure the sensor for Active High using the buttons on the sensor, then connect the gray input wire to V+ (12 to 30 V DC). Pulse the remote input according to the diagram and the instructions provided in this manual.

The length of the individual programming pulses is equal to the value **T: 0.04 seconds ≤ T ≤ 0.8 seconds**.

Exit remote programming modes by holding the remote input low for > 2 seconds, or waiting for the automatic 60-second timeout, or by pressing and holding **Escape** for 2 seconds. The sensor returns to Run mode without saving any new settings.

© Banner Engineering Corp. All rights reserved.

Remote Input Map

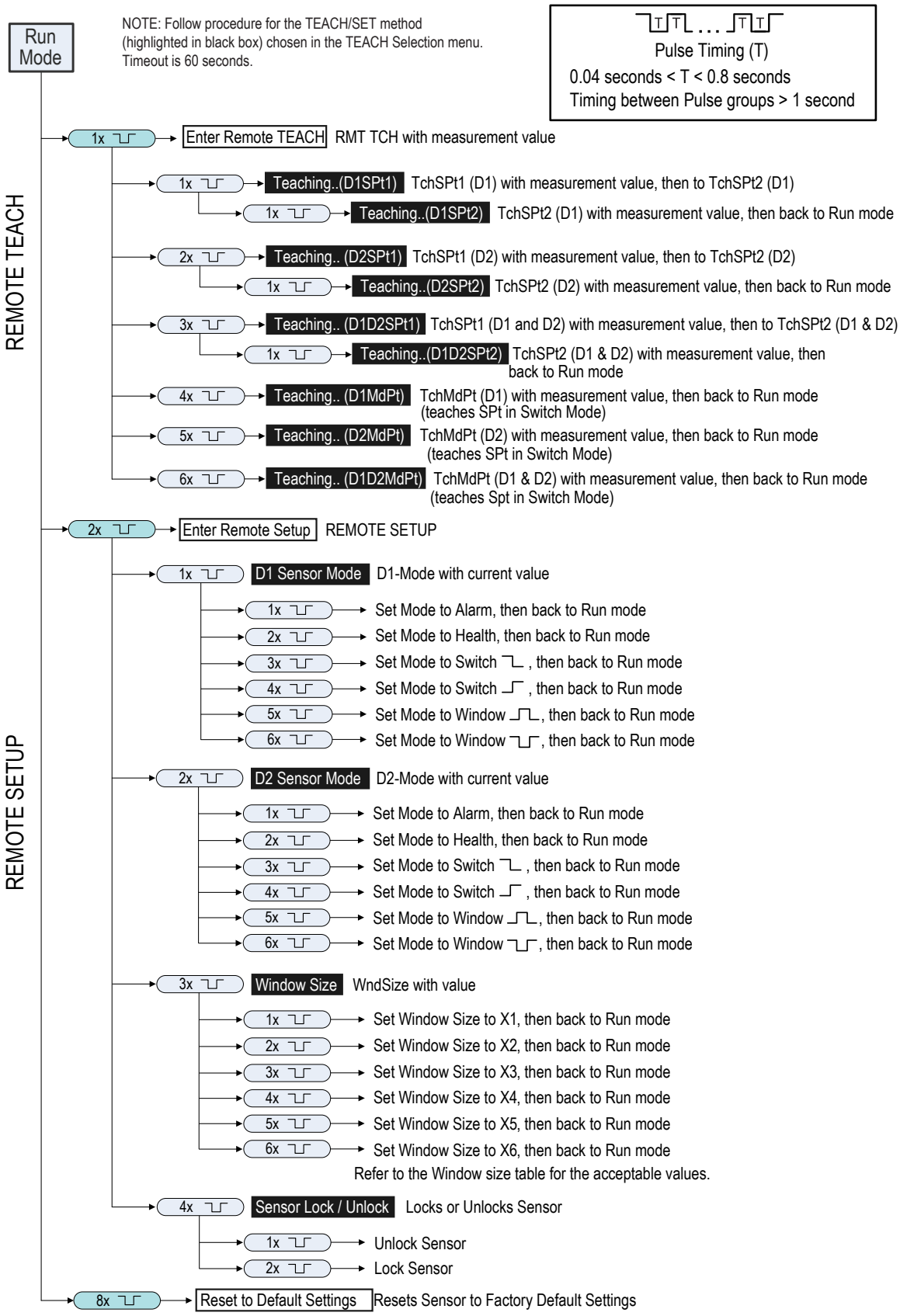

© Banner Engineering Corp. All rights reserved.
www.bannerengineering.com

Remote TEACH window sizes

Variable	Remote TEACH Window Size (mm)	
	LTF12	LTF24
X1	10	10
X2	20	20
X3	100	100
X4	500	500
X5	2000	2000
X6	11950	23950

Locking and Unlocking the Sensor

Use the lock and unlock feature to prevent unauthorized or accidental programming changes. A lock symbol displays in the upper left corner of the display to indicate when the sensor is locked. When locked, the menus are available to view settings, but the values cannot be changed. The remote input is also disabled, except for the unlock function.

Button Instructions--To lock or unlock the sensor using the buttons, press and hold **Down** and **Escape** simultaneously for 3 seconds.

Remote Input Instructions

1. Access the setup mode.

Action		Result
Double-pulse the remote input.	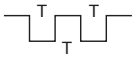	"**REMOTE SETUP**" displays.

2. Access the lock/unlock function.

Action		Result
Four-pulse the remote input.		"**LOCK**" and the current status (unlocked or locked) display.

3. Lock or unlock the sensor.

Action		Result
Unlock : Single-pulse the remote line.		"**Unlocked**" flashes and the sensor returns to Run mode. The sensor is unlocked.
Lock: Double-pulse the remote input.	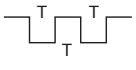	"**Locked**" flashes and the sensor returns to Run mode. The sensor is locked and the lock symbol displays in the upper left corner.

Discrete Output Menu

Use this menu to view or change

- Setpoints
- Midpoint
- Mode
- Timers
- Polarity

© Banner Engineering Corp. All rights reserved.
www.bannerengineering.com

Discrete Output Menu Maps

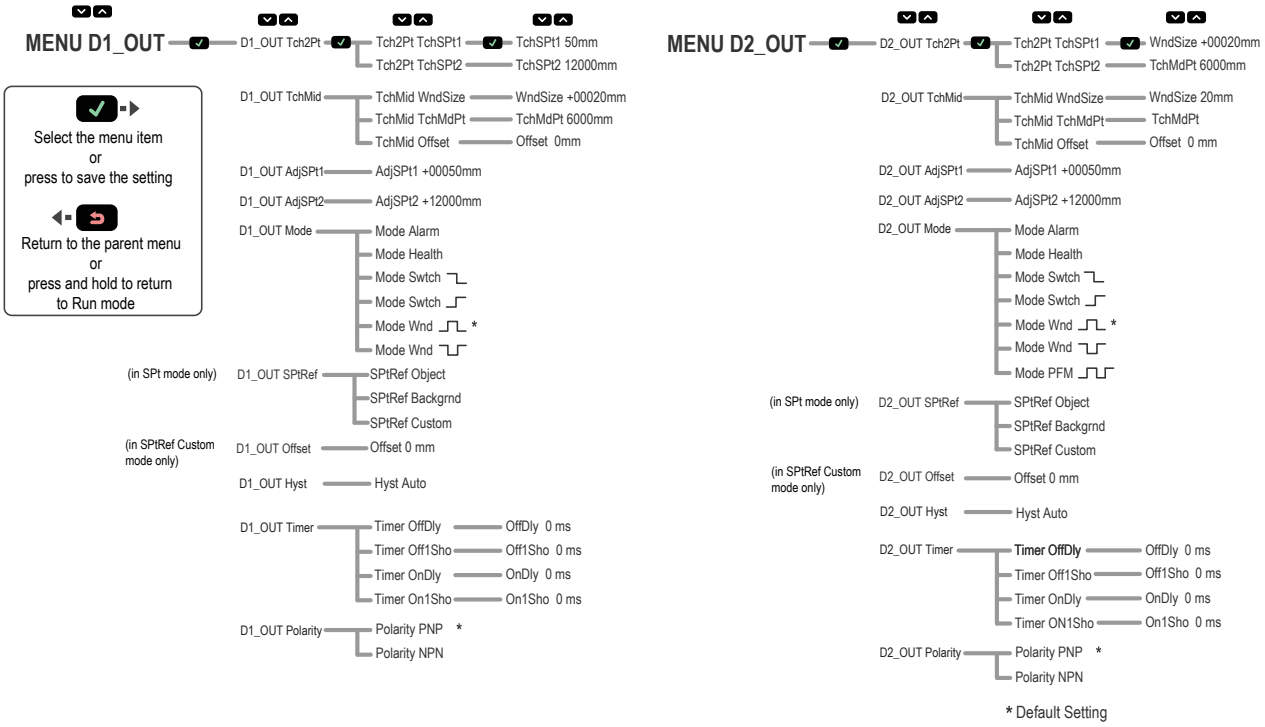

Two-Point TEACH

The TchSpt1 and TchSPt2 options teach the desired switch points. When using the buttons, the switch points can be taught independently. Both values must be taught when using the remote input. The same TEACH menus exist for both the D1_OUT and D2_OUT, but the switch points are set independently.

> **NOTE:** When in Switch mode, see "TEACH Switch Point" on page 21.

Navigate: MENU › Dx_OUT › Tch2Pt › TchSPt1 and navigate: **MENU › Dx_OUT › Tch2Pt › TchSPt2**

Remote Input: Available

Button Instructions

1. Present the target.

Action	Result
Present the target. The target must be within the sensor's range..	The target's distance measurement value displays.

2. Access the TEACH mode and TEACH the sensor.

Action	Result
Navigate: **MENU › Dx_OUT › Tch2Pt › TchSPt1** OR Navigate: **MENU › Dx_OUT › Tch2Pt › TchSPt2**	The selected TEACH mode and "**Teaching**" display while the sensor is being taught. **TEACH Accepted** The new value is shown on the second line of the display and flashes before it is saved and the sensor returns to the parent menu. **TEACH Not Accepted** "**FAIL**" and a warning message display, and the sensor returns to the parent menu.

© Banner Engineering Corp. All rights reserved.
www.bannerengineering.com

3. Repeat steps 1 to 2 for the other switch point, if desired.

Remote Input Instructions

1. Access the TEACH mode.

Action		Result
Single-pulse the remote input.		"**RMT TCH**" and the current switch point value displays.

2. Present the target.

Action	Result
Present the switch point one target.	"**RMT TCH**" and the target's measurement value display.

3. TEACH the sensor.

Action		Result
Double-pulse the remote input.	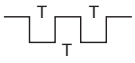	"**TchSPt1 Teaching**" displays while the sensor is being taught. **TEACH Accepted** The new value displays on the second line of the display, flashes, and the sensor goes to "**TchSPt2**" and the current measurement value. **TEACH Not Accepted** "**FAIL**" flashes, the sensor returns to step 2, and "**RMT TCH**" displays.

4. Present the target.

Action	Result
Present the switch point two target.	"**TchSPt2**" and the target's measurement value display.

5. TEACH the sensor.

Action		Result
Single-pulse the remote input.		"**TchSPt2 Teaching**" displays while the sensor is being taught. **TEACH Accepted** The new value displays on the second line of the display, flashes, and the sensor returns to Run mode. **TEACH Not Accepted** "**FAIL**" flashes, the sensor returns to step 2, and "**RMT TCH**" displays.

© Banner Engineering Corp. All rights reserved.
www.bannerengineering.com

Midpoint TEACH

The Midpoint TEACH uses both the window size and the TEACH midpoint to determine the actual measurement window. For example, a window of 200 mm with a midpoint of 600 mm places the measurement window from 500 mm to 700 mm.

Window and Midpoint Example

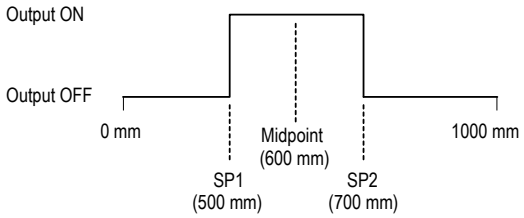

To use Midpoint TEACH:

1. Set the window size.
2. Set the measurement window using "TEACH Midpoint" on page 19.

Window Size

The **D_OUT › TchMid › WndSize** option sets the window size that the Midpoint TEACH uses to set the setpoint one and setpoint two thresholds.

The taught surface must be inside the defined sensing range, and at least one setpoint (with offset applied, if any) must be located within the sensing range.

Parameters	LTF12	LTF24
Window Size Minimum	10 mm	10 mm
Window Size Maximum	11950 mm	23950 mm
Range	50 mm to 12000 mm	50 mm to 24000 mm
Default Window Size	20 mm	20 mm

Remote Input: Available

1. Access the setup mode.

Method	Action		Result
Push Button			"**WndSize**" and the current window size value display.
Remote Input	a. Double-pulse the remote input to enter setup mode. b. Three-pulse the remote input to enter window size mode.	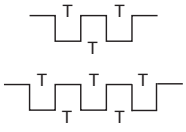	a. "**REMOTE SETUP**" displays. b. "**WndSize**" and the current value display.

2. Set the window size.

Method	Action	Result
Push Button	a. Use **Down** and **Up** to set the desired window size—the value changes in increments of 2. b. Press **Enter** to save the new value.	a. "**WndSize**" and the new value display. b. The new value flashes and returns to "**TchMid WndSize**".
Remote Input (Sets A_OUT and D_OUT window Size)	Pulse the remote input 1 to 6 times to select the desired window size. 1 pulse: 10 mm 2 pulses: 20 mm 3 pulses: 100 mm 4 pulses: 500 mm 5 pulses: 2000 mm 6 pulses: 11950 mm for the LTF12; 23950 mm for the LTF24	The new value flashes and the sensor returns to Run mode.

TEACH Midpoint

The TchMdPt option sets the midpoint that determines the actual measurement window.

© Banner Engineering Corp. All rights reserved.
www.bannerengineering.com

Navigate: MENU › Dx_OUT › TchMid › TchMdPt

Remote Input: Available

Button Instructions

1. Present the target.

Action	Result
Present the target.	The target's distance measurement value displays.

2. Access the TEACH midpoint mode and TEACH the sensor.

Action	Result
Navigate: **MENU › Dx_OUT › TchMid › TchMdPt**	"**TchMdPt Teaching**" displays while the sensor is being taught. TEACH Accepted The new value is shown on the second line of the display and flashes before it is saved and the sensor returns to "**TchMid TchMdPt**". TEACH Not Accepted "**FAIL**" and a warning message display, and the sensor returns to "**TchMid TchMdPt**".

Remote Input Instructions

1. Access the TEACH mode.

Action		Result
Single-pulse the remote input.		"**RMT TCH**" and the current measurement value display.

2. Present the target.

Action	Result
Present the target.	"**RMT TCH**" and the target's measurement value display.

3. TEACH the sensor.

Action		Result
Five-pulse the remote input.	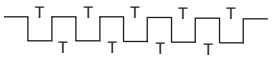	"**TchMdpt Teaching**" displays while the sensor is being taught. TEACH Accepted The new value displays on the second line of the display, flashes, and the sensor returns to Run mode. TEACH Not Accepted "**FAIL**" and a warning message display, the sensor returns to step 2, and "**RMT TCH**" displays.

© Banner Engineering Corp. All rights reserved.
www.bannerengineering.com

Window TEACH Offset

Use the **D_OUT › TchMid › Offset** menu to set an offset from the taught distance used during a Midpoint TEACH. By default, the value is 0 mm because the window is centered around the taught distance. A positive offset value always shifts the window towards the sensor.

Adjust Switch Point One

The AdjSPt1 option manually adjusts the value of the switch point one threshold for the Discrete Output when the sensor is in Window mode. The value is adjustable within the sensor's range. It is required to maintain the minimum window size between switch points. This menu is not available when the sensor is in Switch, Alarm, or Health mode.

Remote Input: Not available

Default: 50 mm

Adjust Switch Point Two

The AdjSPt2 option manually adjusts the value of the switch point two threshold for the Discrete Output when the sensor is in Window mode. The value is adjustable with the sensor's range. It is required to maintain the minimum window size between switch points. This menu is not available when the sensor is in Switch, Alarm, or Health mode.

Remote Input: Not available

Default: 12000 mm for LTF12; 24000 mm for LTF24

TEACH Switch Point

The TchSPt option teaches the distance at which the switch point threshold is placed when the Discrete Output is in Switch mode. This menu is not available when the sensor is in Window, Alarm, or Health mode.

Navigate: **MENU › Dx_OUT › TchSPt**

Remote Input: Available

Button Instructions

1. Present the target.

Action	Result
Present the target. The target must be within the sensor's range.	The target's distance measurement value displays.

2. Access the switch point TEACH mode and TEACH the sensor.

Action	Result
Navigate: **MENU › Dx_OUT › TchSPt**	"**TchSPt Teaching**" displays while the sensor is being taught. TEACH Accepted The new value is shown on the second line of the display and flashes before it is saved and the sensor returns to "**Dx_OUT TchSPt**". TEACH Not Accepted "**FAIL**" and a warning message display, and the sensor returns to "**Dx_OUT TchSPt**".

Remote Input Instructions

1. Verify the sensor is in Switch mode.
2. Access the TEACH mode.

© Banner Engineering Corp. All rights reserved.
www.bannerengineering.com

Action		Result
Single-pulse the remote input.		"**RMT TCH**" and the current measurement value display.

3. Present the target.

Action	Result
Present the target.	"**RMT TCH**" and the target's measurement value display.

4. TEACH the sensor.

Action		Result
Five-pulse the remote input.	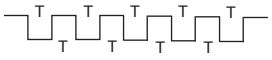	"**TchSPt Teaching**" displays while the sensor is being taught. **TEACH Accepted** The new value displays on the second line of the display, flashes, and the sensor returns to Run mode. **TEACH Not Accepted** "**FAIL**" flashes, the sensor returns to step 3, and "**RMT TCH**" displays.

Adjust Switch Point

The AdjSPt option manually adjusts the value of the switch point threshold for the discrete output when the sensor is in Switch mode. The value is adjustable within the sensor's range. This menu is not available when the sensor is in Window, Alarm, or Health mode.

Remote Input: Not available

Default: 50 mm

Mode

The Mode option sets the output to the desired mode.

Navigate:**MENU › Dx_OUT › Mode**

Remote Input: Available

Default: Wnd ⎍ mode

The following table describes the sensor modes.

Mode	Description
Alarm	**Alarm Mode:** The Discrete Output is Off while a target is detected by the sensor at any distance. When a loss of signal occurs, the Discrete Output is On. This mode has no associated thresholds.
Health	**Health Mode:** The Discrete Output is On while a target is detected by the sensor at any distance. When a loss of signal occurs, the Discrete Output is Off. This mode has no associated thresholds.
Switch ⎍	**Switch Mode:** The Discrete Output is On while a target is detected nearer than the switch point threshold. When a target is detected farther than the switch point threshold or the signal is lost, the Discrete Output is Off.
Switch ⎍	**Switch Mode:** The Discrete Output is Off while a target is detected nearer than the switch point threshold. When a target is detected farther than the switch point threshold or the signal is lost, the Discrete Output is On.

Continued on page 23

© Banner Engineering Corp. All rights reserved.

Continued from page 22

Mode	Description
Wnd	**Window Mode:** The Discrete Output is On while a target is detected between the SPt1 and SPt2 thresholds. (Default) When a target is detected outside the SPt1 and SPt2 thresholds or the signal is lost, the Discrete Output is Off.
Wnd	**Window Mode:** The Discrete Output is Off while a target is detected between the SPt1 and SPt2 thresholds. When a target is detected outside the SPt1 and SPt2 thresholds or the signal is lost, the Discrete Output is On.
PFM	The discrete is pulsed at a frequency between 100 Hz and 600 Hz and is scaled proportional to the sensor's D2_OUT Measurement span. Targets outside of the measurement span or a loss of signal pulse at 50 Hz.

Remote Input Instructions

1. Access the setup mode.

Action		Result
Double-pulse the remote input.	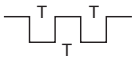	"**REMOTE SETUP**" displays.

2. View the current mode.

Action		Result
Double-pulse the remote input.	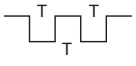	The current mode displays.

3. Program the sensor.

Action	Result
Pulse the remote input 1 to 6 times to select the desired mode.	The selected mode flashes and the sensor returns to Run mode.

Pulses		Mode
1		Alarm
2	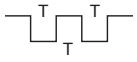	Health
3	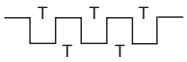	Swtch
4	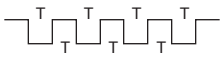	Swtch
5	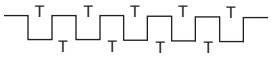	Wnd
6		Wnd

Switch Point Reference (SPtRef)

The SPtRef menu only displays for a discrete output when it is set to switch mode. This setting cannot be changed with remote teach.

- **Object** (default). Object mode automatically optimizes the switching threshold just past the taught distance, farther away from the sensor's face.

© Banner Engineering Corp. All rights reserved.
www.bannerengineering.com

- **Background**. Background mode automatically optimizes the switching threshold just in front of the taught distance, closer to the sensor's face.
- **Custom**. Custom mode allows the user to define the location of the switching threshold relative to a taught distance using the Offset menu that appears only after selecting Custom Switch Point Reference.

In **Object** or **Background**, the distance between the taught surface and the switching threshold varies depending on measurement stability. Use object mode when teaching an object if a change in state is required when the object is no longer present. Use background mode when teaching background so that the output state changes when a new object is in front of the background.

Navigate: **MENU › D_OUT › SPtRef**

Remote Input: Not available

Default: Object

Switch Point TEACH Offset

Use this menu to set an offset from the taught distance after a switch point TEACH, if SPtRef is set to Custom.

By default, the value is 0 mm. A positive offset value always shifts the threshold towards the sensor.

Navigate: MENU › Dx_OUT › TchMd › Offset

Remote Input: Not available

Default: 0 mm

Switch Point Hysteresis

With the default setting of AUTO, the hysteresis value applied at each threshold is automatically calculated and set based on target, distance and measurement repeatability, with a 10 mm minimum setting.

By default, the hysteresis is applied away from the sensor. Changing the SPt Ref setting from Object to Background changes the direction of the hysteresis.

How hysteresis affects the sensor output based on the discrete output switchpoint mode and the setpoint reference mode

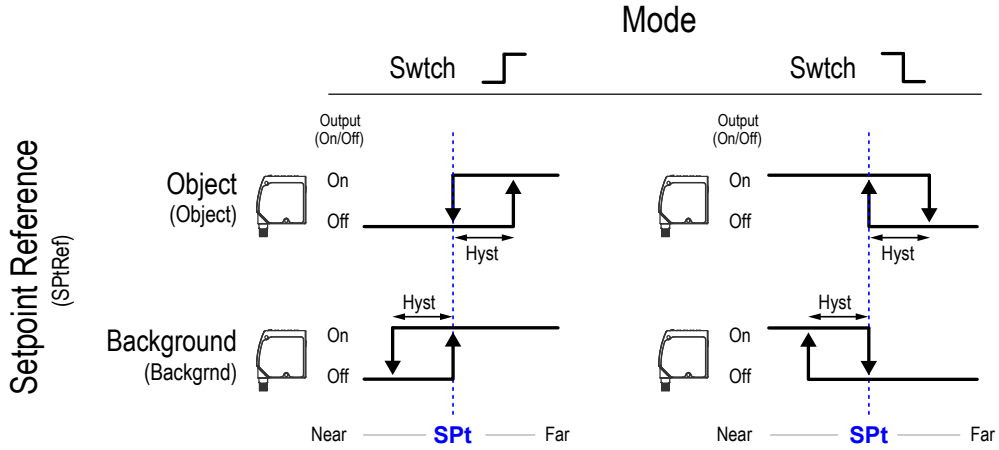

© Banner Engineering Corp. All rights reserved.
www.bannerengineering.com

How hysteresis affects the two discrete output window modes

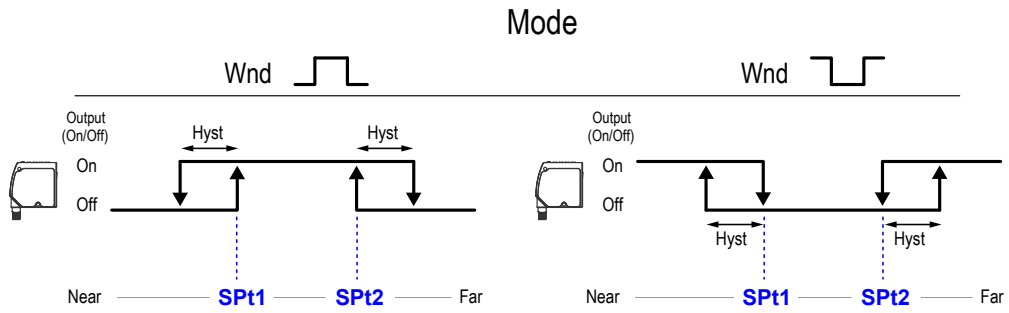

How hysteresis affects the output on/off points when if the sensor is configured with mode = Swtch_|- and SPtRef configured as Backgrnd

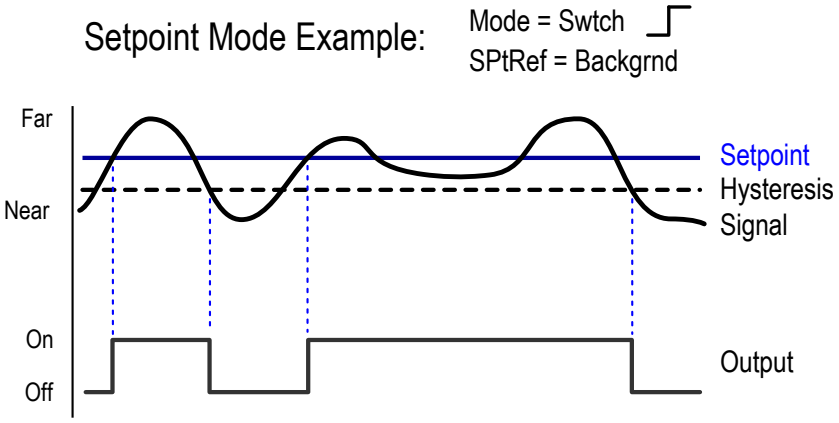

Press the up button to manually select a constant hysteresis value between 2 mm and 12000 mm.

Navigate: **MENU › D_OUT › Hyst**

Remote Input: Not available

Default: Auto

Timer

The Timer option sets the delays and timers. On/Off Delays and On/Off One-Shot timers can be programmed between 1 to 9999 ms (a value of 0 disables the delay/timer). The following figure defines how the delays/timers affect the output behavior.

Navigate: MENU › Dx_OUT › Timer

Remote Input: not available

Default: 0 ms for all timers

© Banner Engineering Corp. All rights reserved.
www.bannerengineering.com

Delays/Timers

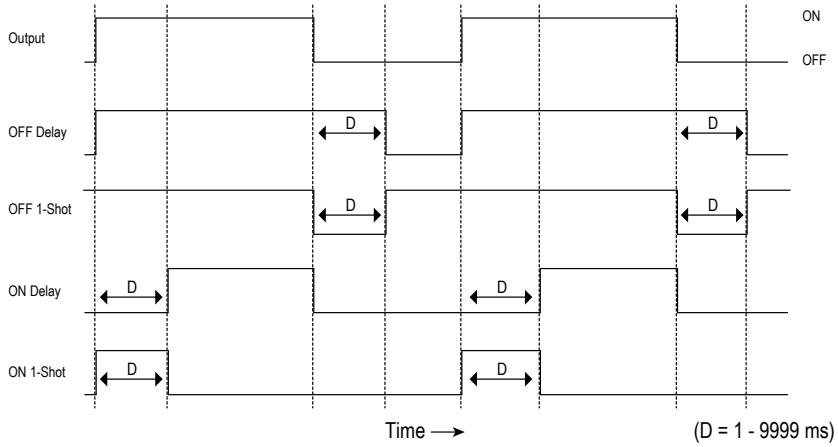

Some combinations of delays/timers are not allowed. The programming menu automatically disables invalid combinations of delays/timers. The following table shows the allowable combinations of delays/timers.

	Off Delay	Off One-Shot Timer	On Delay	On One-Shot Timer
Off Delay (OffDly)	OK	OK	OK	N/A
Off One-Shot Timer (Off1Sho)	OK	OK	N/A	N/A
On Delay (OnDly)	OK	N/A	OK	OK
On One-Shot Timer (On1Sho)	N/A	N/A	OK	OK

Polarity

The Polarity option sets the discrete output polarity to either PNP (current sourcing) or NPN (current sinking). The physical wiring of the sensor and the sensor polarity setting must match.

Remote Input: Not available

Default: PNP

Input Menu (INPUT)

Use this menu to view or change the:

- Multi-function input type

Input Menu map

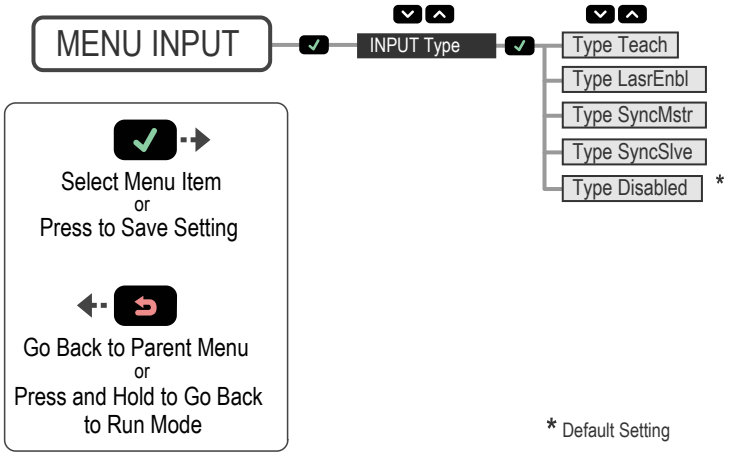

Input Type

The Type option sets the input type.

© Banner Engineering Corp. All rights reserved.
www.bannerengineering.com

Navigate: **MENU › INPUT › Type**

Remote Input: Not available

Default: Disabled

Input Type	Description
Teach	The remote input is used to TEACH and program the sensor. (Default)
LasrEnbl	The remote input is used to control when the laser emitter is On/Off.
SyncMstr	The remote input is used as the Master Sync output to an attached Slave sensor (see "Sync Master/ Slave" on page 34).
SyncSlve	The remote input is used as the Slave Sync input from an attached Master sensor (see "Sync Master/ Slave" on page 34).
Disabled	The remote input is disabled.

Input Active

The Active option sets the active state of the remote input. Use the Active options to change the active input to Low or High.

Navigate: **MENU › INPUT › Active**

Remote Input: Not available

Default: Low

Input Active	Description
Low	The remote input detects low (0 V) inputs and high-to-low transitions. (Default)
High	The remote input detects high (V+) inputs and low-to-high transitions.

Measure Menu (MEASURE)

Use this menu to view or change the:

- Speed

Measure Menu Map

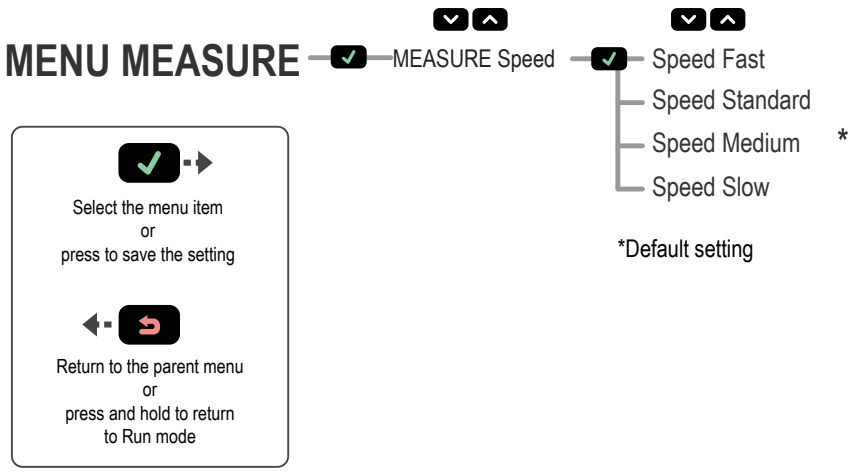

Speed

The Speed option sets the speed at which the measurement is calculated. This process uses averaging in the digital processing of the signal to calculate the measurement. A slower speed increases the response time of the sensor but improves the repeatability. Refer to the repeatability specifications for each speed.

© Banner Engineering Corp. All rights reserved.
www.bannerengineering.com

Navigate: **MENU › MEASURE › Speed**

Remote Input: Not available

Default: Medium

Speed	Response Time *	Lateral Entry
Fast	1.5 ms	5.5 ms
Standard	8 ms	16 ms
Medium	32 ms	48 ms
Slow	256 ms	288 ms

* Response time triples when using Master/Slave mode.

Lateral Entry Example

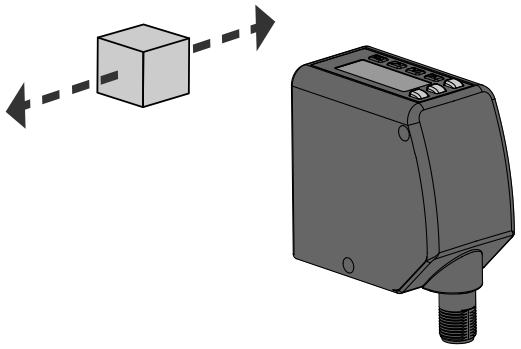

Display Menu (DISPLAY)

Use this menu to view or change the:

- Display units
- Display orientation
- Sleep mode settings

Display Menu Map

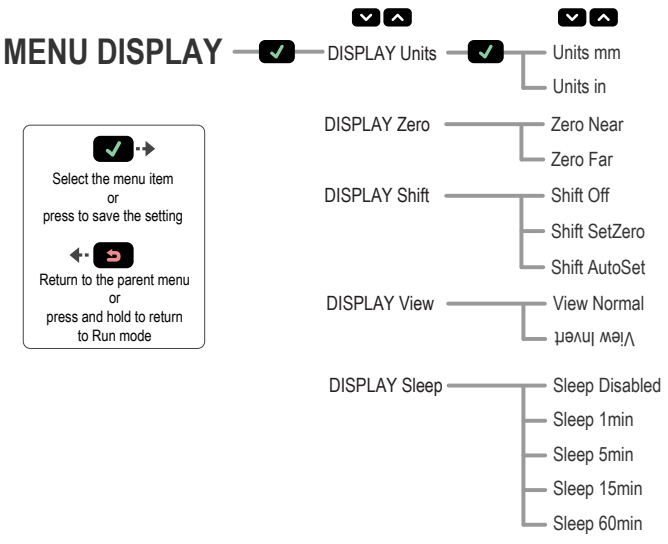

Units

The Units option sets the displayed units to millimeters (mm) or inches (").

© Banner Engineering Corp. All rights reserved.
www.bannerengineering.com

Navigate: **MENU › DISPLAY › Units**

Remote Input: Not available

Default: mm

Zero and Shift

Use the **Display Zero** menu to select the zero-reference location. The default is 0 = the face of the sensor.

- Near—0 = the face of the sensor; the measurement increases further from the sensor
- Far—0 = maximum range; the measurement increases closer to the sensor

Use the **Display Shift** menu to select whether the sensor shifts the zero-reference location based on the last TEACH process. The default is Off (0).

- Off—0 = the face of the sensor or the maximum range, depending on the zero setting
- SetZero—Sets the current distance as its new zero reference location. This process is independent of teaching analog or discrete set points.
- AutoSet—Shifts the zero-reference location at the taught distance during any analog or discrete setting teach.

This figure illustrates three examples of how changes to the zero and shift settings affect what distance readout is shown on the display when in 2-pt TEACH mode. Changes to the zero setting affect the direction in which the distance increases. Turning the shift setting on sets the taught location as the reference point for any distance measurement.

© Banner Engineering Corp. All rights reserved.

Example Zero and Shift settings

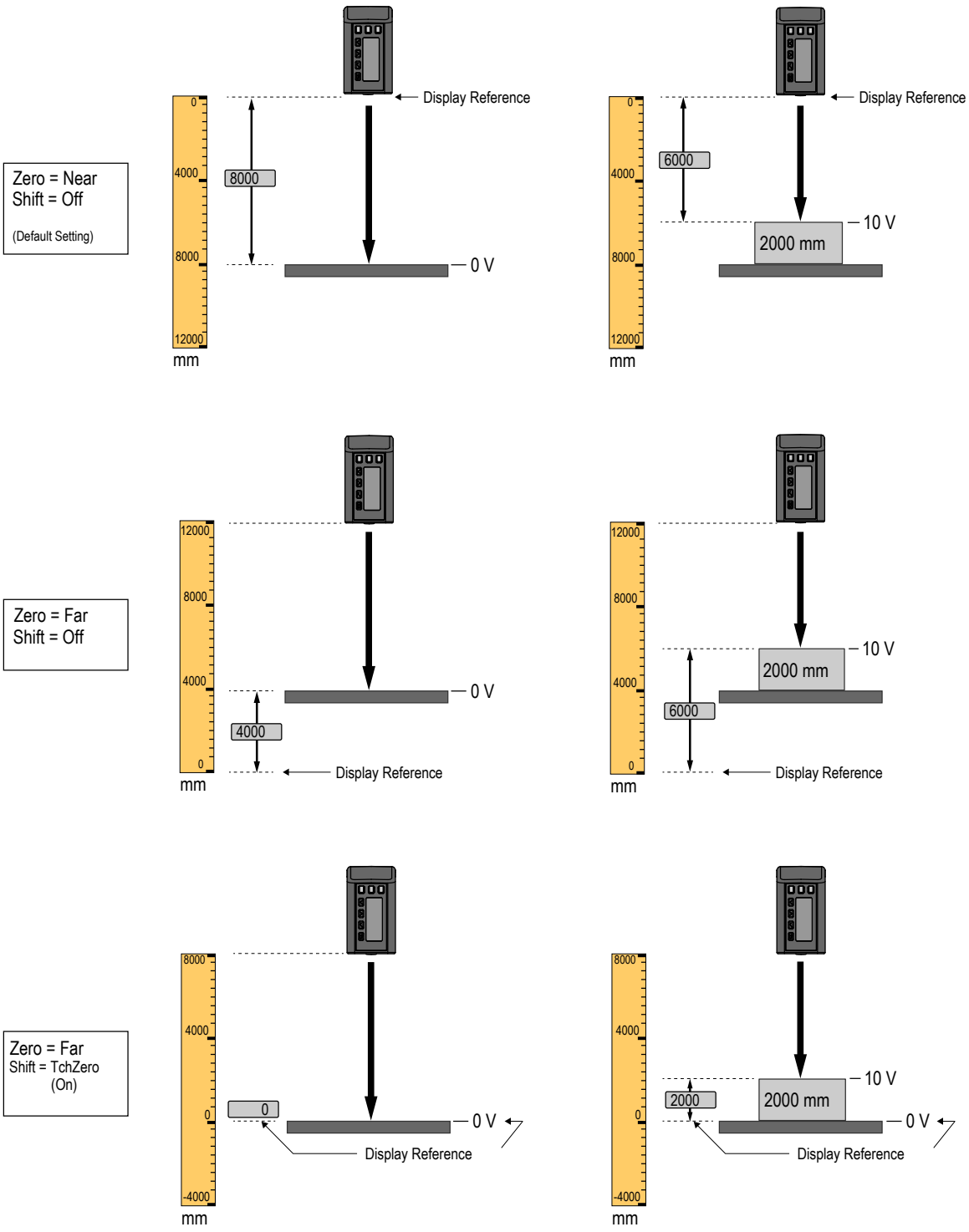

View

The View option sets the display orientation of the sensor. Invert the display for applications where the device is mounted upside down. This rotates the display 180°. The Down and Up buttons do not change when the display is inverted.

Navigate: **MENU › DISPLAY › View**

Remote Input: Not available

© Banner Engineering Corp. All rights reserved.
www.bannerengineering.com

Default: Normal

Normal Display Orientation



Inverted Display Orientation



Sleep

The Sleep option sets when the display is put to sleep. Four timing options are available: 1, 5, 15, or 60 minutes. Sleep mode is disabled by default. Sleep occurs in Run mode and any menu. To wake the sensor and return to the last viewed mode or menu, press any button.

Navigate: **MENU › DISPLAY › Sleep**

Remote Input: Not available

Default: Disabled

Information Menu (INFO)

Use this menu to view model, part number (P/N), serial number (S/N), and firmware version (Version) information. Select one of these options to view specific information for your sensor. This information is read-only.

Navigate: **MENU › INFO**

Remote Input: Not available

Information Menu Map

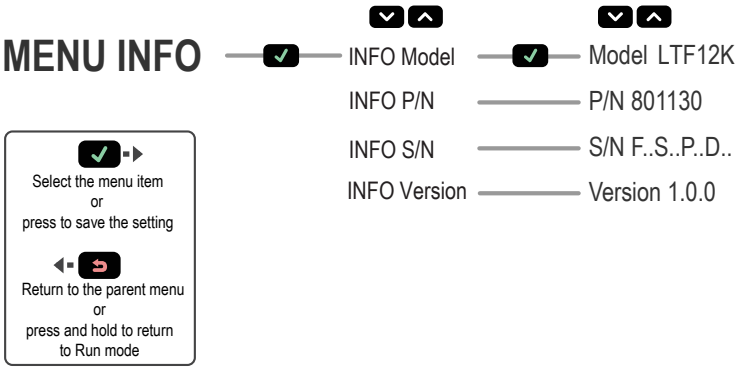

Reset Menu (RESET)

Use this menu to restore the sensor to the factory default settings.

Navigate: **MENU › RESET.** Select Yes to apply the factory defaults; select No to return to the Reset option without changing any sensor settings.

Remote Input: Eight-pulse the remote input

© Banner Engineering Corp. All rights reserved.
www.bannerengineering.com

Reset Menu Map

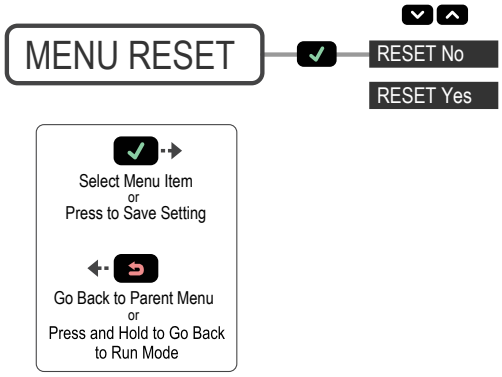

Factory Default Settings

Discrete Output Settings	LTF12	LTF24
Adjust Switch Point One	50 mm	50 mm
Adjust Switch Point Two	12000 mm	24000 mm
Mode	Wnd	Wnd
Hyst	Auto	Auto
Polarity	PNP	PNP
Timer	0 ms for all timers	0 ms for all timers
Window Size	20 mm	20 mm

Input Settings	Value
Input Active	Low
Input Type	Disabled

Measure Settings	Value
Speed	Medium

Display Settings	Value
Sleep	Disabled
Units	mm
Zero	Near
Shift	Off
View	Normal

© Banner Engineering Corp. All rights reserved.
www.bannerengineering.com

Chapter 4 IO-Link Interface

IO-Link® [1]is a point-to-point communication link between a master device and sensor. Use IO-Link to parameterize sensors and transmit process data automatically.

For the latest IO-Link protocol and specifications, see www.io-link.com.

Each IO-Link device has an IODD (IO Device Description) file that contains information about the manufacturer, article number, functionality etc. This information can be easily read and processed by the user. Each device can be unambiguously identified via the IODD as well as via an internal device ID. Download the LTF's IO-Link IODD package (p/n 200386) from Banner Engineering's website at www.bannerengineering.com.

Banner has also developed Add On Instruction (AOI) files to simplify ease-of-use between the LTF, multiple third-party vendors' IO-Link masters, and the Logix Designer software package for Rockwell Automation PLCs. Three types of AOI files for Rockwell Allen-Bradley PLCs are listed below. These files and more information can be found at www.bannerengineering.com.

Process Data AOIs—These files can be used alone, without the need for any other IO-Link AOIs. The job of a Process Data AOI is to intelligently parse out the Process Data word(s) in separate pieces of information. All that is required to make use of this AOI is an EtherNet/IP connection to the IO-Link Master and knowledge of where the Process Data registers are located for each port.

Parameter Data AOIs—These files require the use of an associated IO-Link Master AOI. The job of a Parameter Data AOI, when working in conjunction with the IO-Link Master AOI, is to provide quasi-realtime read/write access to all IO-Link parameter data in the sensor. Each Parameter Data AOI is specific to a given sensor or device.

IO-Link Master AOIs—These files require the use of one or more associated Parameter Data AOIs. The job of an IO-Link Master AOI is to translate the desired IO-Link read/write requests, made by the Parameter Data AOI, into the format a specific IO-Link Master requires. Each IO-Link Master AOI is customized for a given brand of IO-Link Master.

Add and configure the relevant Banner IO-Link Master AOI in your ladder logic program first; then add and configure Banner IO-Link Device AOIs as desired, linking them to the Master AOI as shown in the relevant AOI documentation.

[1] IO-Link® is a registered trademark of PROFIBUS Nutzerorganisation e.V.

© Banner Engineering Corp. All rights reserved.

Chapter 5 Sync Master/Slave

Two LTF sensors may be used together in a single sensing application. To eliminate crosstalk between the two sensors, configure one sensor to be the master and one to be the slave. In this mode, the sensors alternate taking measurements and the response speed triples.

1. Configure the first sensor as the master; navigate: **MENU › INPUT › Type › SyncMstr.**
2. Configure the second sensor as the slave; navigate: **MENU › INPUT › Type › SyncSlve.**
3. Connect the gray (input) wires of the two sensors together.

© Banner Engineering Corp. All rights reserved.

Chapter 6 Additional Remote TEACH Procedures

TEACH Both Discrete Output Switch Points Together

Use the following procedure to teach both Discrete Output switch points at the same time using the remote input. This feature is not available using the buttons.

1. Access the TEACH mode.

Action		Result
Single-pulse the remote input.		"**RMT TCH**" and the current measurement value display.

2. Present the target.

Action		Result
Present the switch point one target.		"**RMT TCH**"and the target's measurement value display.

3. TEACH the sensor.

Action		Result
Three-pulse the remote input.	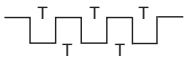	"**D1D2Spt1 Teaching**" displays while the sensor is being taught. **TEACH Accepted** The new value displays on the second line of the display, flashes, and then "**D1D2Spt2**" and the current measurement value display. **TEACH Not Accepted** "**FAIL**" flashes, the sensor returns to step 2, and "**RMT TCH**" displays.

4. Present the target.

Action		Result
Present the switch point two target.		"**D1D2Spt2**" and the target's measurement value display.

5. TEACH the sensor.

Action		Result
Single-pulse the remote input.		"**D1D2Spt2 Teaching**" displays while the sensor is being taught. **TEACH Accepted** The new value displays on the second line of the display, flashes, and the sensor returns to Run mode. **TEACH Not Accepted** "**FAIL**" flashes, the sensor returns to step 2, and "**RMT TCH**" displays.

© Banner Engineering Corp. All rights reserved.
www.bannerengineering.com

TEACH Both Discrete Output Midpoints Together

Use the following procedure to teach an identical discrete output midpoint (switch point) for both D1_OUT and D2_OUT at the same time using the remote input.This feature is not available using the buttons. Note that if the window sizes and/or offsets were set independently (using the buttons), the windows taught using the following procedure could be different.

When the Discrete Output is set to Switch Mode, the SPt TEACH is executed with SPtRef=Custom and Offset=0 mm.

1. Access the TEACH mode.

Action		Result
Single-pulse the remote input.		"**RMT TCH**" and the current measurement value display.

2. Present the target.

Action	Result
Present the midpoint (switch point) target.	"**RMT TCH**"and the target's measurement value display.

3. TEACH the sensor.

Action		Result
Six-pulse the remote input.		"**D1D2MdPt Teaching**" displays while the sensor is being taught. **TEACH Accepted** The new value displays on the second line of the display, flashes, and the sensor returns to Run mode. **TEACH Not Accepted** "**FAIL**" flashes, the sensor returns to step 2, and "**RMT TCH**" displays.

© Banner Engineering Corp. All rights reserved.

Chapter 7 Accessories

Cordsets

All measurements are listed in millimeters, unless noted otherwise. The measurements provided are subject to change.

5-pin Single-Ended M12 Female Shielded Cordsets (datasheet p/n 236184)				
Model	**Length**	**Dimensions (mm)**	**Pinout (Female)**	
BC-M12F5-22-1-SF	1 m (3.28 ft)	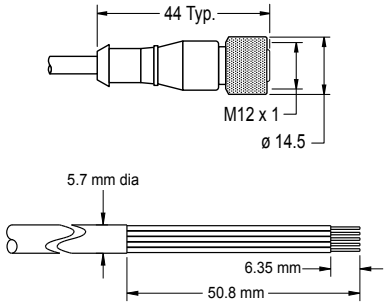	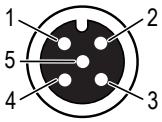	1 = Brown 2 = White 3 = Blue 4 = Black 5 = Gray
BC-M12F5-22-2-SF	2 m (6.56 ft)			
BC-M12F5-22-5-SF	5 m (16.4 ft)			
BC-M12F5-22-8-SF	8 m (26.25 ft)			
BC-M12F5-22-10-SF	10 m (30.81 ft)			
BC-M12F5-22-15-SF	15 m (49.2 ft)			

5-pin Single-Ended M12 Female Right-Angle Shielded Cordsets (datasheet p/n 236184)				
Model	**Length**	**Dimensions (mm)**	**Pinout (Female)**	
BC-M12F5A-22-1-SF	1 m (3.28 ft)	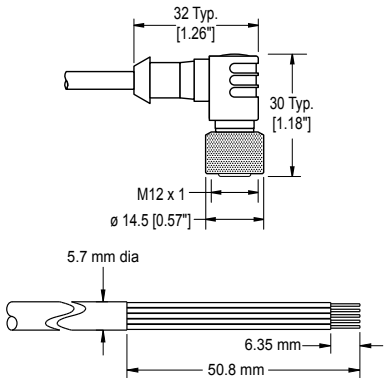	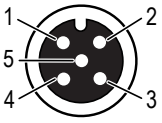	1 = Brown 2 = White 3 = Blue 4 = Black 5 = Gray
BC-M12F5A-22-2-SF	2 m (6.56 ft)			
BC-M12F5A-22-5-SF	5 m (16.4 ft)			
BC-M12F5A-22-8-SF	8 m (26.25 ft)			
BC-M12F5A-22-10-SF	10 m (30.81 ft)			
BC-M12F5A-22-15-SF	15 m (49.2 ft)			

5-Pin Male Threaded and 5-Pin Female Quick Disconnect M12 Cordset with Shield—Double Ended				
Model	**Length "L1"**	**Style**	**Pinout (Male)**	**Pinout (Female)**
MQDEC3-503SS	0.91 m (2.99 ft)	Female Straight/Male Straight		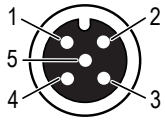
MQDEC3-506SS	1.83 m (6 ft)			
MQDEC3-515SS	4.58 m (15 ft)			
MQDEC3-530SS	9.2 m (30.2 ft)			
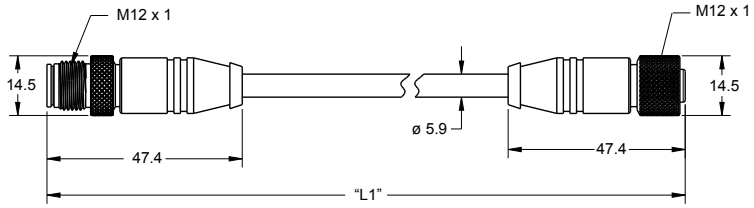			1 = Brown 2 = White 3 = Blue	4 = Black 5 = Gray

© Banner Engineering Corp. All rights reserved.
www.bannerengineering.com

Brackets

All measurements are listed in millimeters, unless noted otherwise. The measurements provided are subject to change.

SMBLTFFA

- Swivel plate bracket
- 5 mm stainless steel
- CAD Files: DXF, PDF, IGS, STP

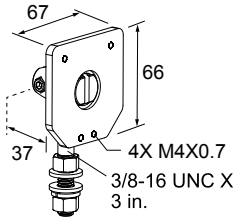

SMBLTFL

- Right-angle bracket
- 12 gauge stainless steel
- CAD Files: DXF, PDF, IGS, STP

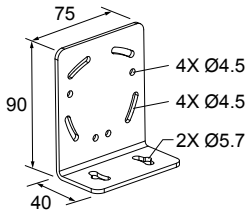

SMBLTFU

- Enclosed bracket
- 16 gauge stainless steel
- CAD Files: DXF, PDF, IGS, STP

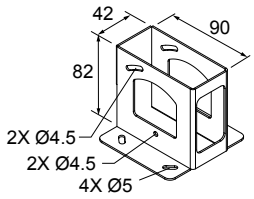

SMBAMSLTFP

- AMS mounting pattern
- 12 gauge stainless steel
- CAD Files: DXF, PDF, IGS, STP

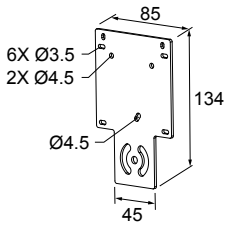

SMBAMSLTFIP

- Includes the mounting plate and two protective windows
- 90 plus degree rotation
- Window frames are black anodized aluminum; mounting plate is stainless steel
- The mounting plate, SMBAMSLTFP, can be ordered separately
- The replacement window, RWAMSLTF, can be ordered separately
- CAD Files: DXF, PDF, IGS, STP

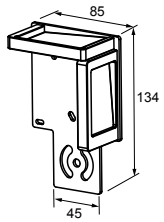

RSD1 Remote Display

Use the optional RSD1 for remote monitoring and configuring compatible devices.

Refer to the RSD1 instruction manual (p/n 199621) or quick start guide (p/n 199622) for more information. See "Accessories" on page 37 for the required cordsets.

© Banner Engineering Corp. All rights reserved.
www.bannerengineering.com

RSD1 Remote Display				
Model	**Output A and B**	**Dimensions**	**Male**	**Wiring**
RSD1QP	Configurable	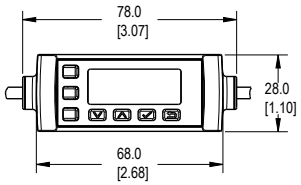		1. Brown 2. White 3. Blue 4. Black 5. Gray

© Banner Engineering Corp. All rights reserved.
www.bannerengineering.com

Chapter 8 Product Support and Maintenance

Sensor Menu Full Map

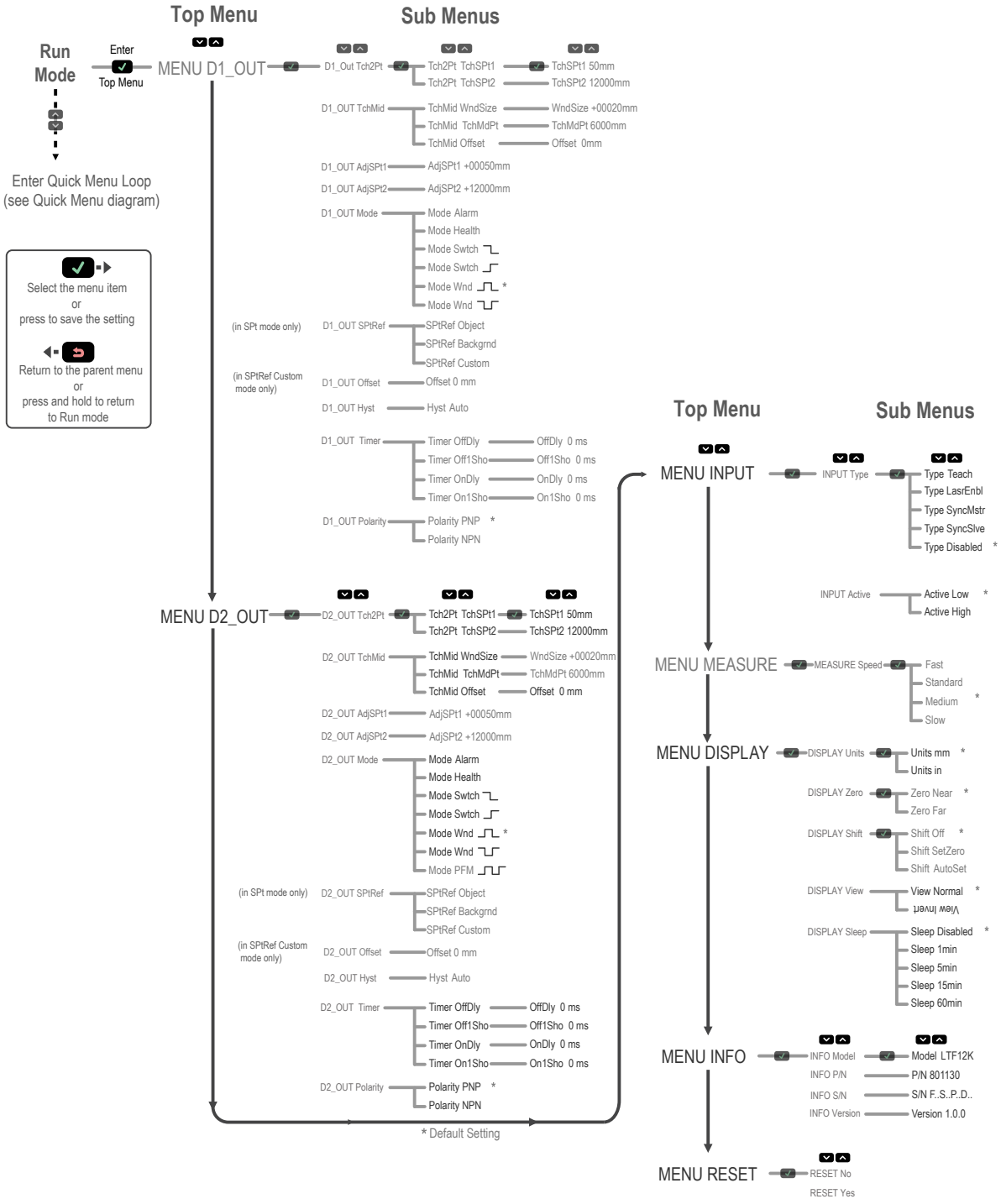

© Banner Engineering Corp. All rights reserved.
www.bannerengineering.com

Troubleshooting

Message/Indicator	Description	Resolution
Fail/Out of Range	The TEACH failed, the target is out of range. The target might have moved out of range after the TEACH process began.	TEACH the target within the measurement range.
Fail/OfSt Out of Range	The TEACH failed. The target is in range but the offset value caused the setpoint(s) to be out of range.	Adjust the offset value or target distance to keep the setpoint(s) within the measurement range.
MIN Wnd xx mm (xx in)	The adjusted or taught window size is too small; the minimum window size is displayed.	The sensor automatically adjusts the window size to maintain the minimum window size and completes the adjust or TEACH operation.
xxxx < NEAR	The threshold (xxxx) is less than the minimum sensing range. xxxx could be 4mA Pt (0V Pt), 20mA Pt (10V Pt) or SPt1.	The desired window size is maintained, but the usable portion of the window is restricted to be within the defined sensing range.
xxxx > FAR	The threshold (xxxx) is greater than the maximum sensing range. xxxx could be 4mA Pt (0V Pt), 20mA Pt (10V Pt) or SPt2.	The desired window size is maintained, but the usable portion of the window is restricted to be within the defined sensing range.
OutRnge	The target is out of range, too dark, or the sensor is not measuring.	Move the target within the measurement range.
< NEAR	During RUN mode the target is detected, but is inside the NEAR measuring range.	The sensor can reliably detect targets up to the face of the sensor, and the Discrete Output state is valid. The Analog Output cannot be used to measure distances inside the NEAR measuring range.
Power LED is flashing green	The sensor input is set to laser enable and the input is not active.	See "Input Type" on page 26.
All LEDs are flashing	The laser shuts off, the Power LED flashes green, the Output LEDs flash amber at 1 Hz, and the display is blank. The sensor has experienced a fault.	Contact Banner Engineering to resolve.
Type Sync Slave	The slave mode sensor does not see the master's pulse.	Make sure that the master mode sensor is configured and functioning properly. Check the input wire connection between the master and slave.

Repairs

Contact Banner Engineering for troubleshooting of this device. **Do not attempt any repairs to this Banner device; it contains no field-replaceable parts or components.** If the device, device part, or device component is determined to be defective by a Banner Applications Engineer, they will advise you of Banner's RMA (Return Merchandise Authorization) procedure.

> **IMPORTANT:** If instructed to return the device, pack it with care. Damage that occurs in return shipping is not covered by warranty.

Contact Us

Banner Engineering Corp. | 9714 Tenth Avenue North | Plymouth, MN 55441, USA | Phone: + 1 888 373 6767

For worldwide locations and local representatives, visit www.bannerengineering.com.

Banner Engineering Corp Limited Warranty

Banner Engineering Corp. warrants its products to be free from defects in material and workmanship for one year following the date of shipment. Banner Engineering Corp. will repair or replace, free of charge, any product of its manufacture which, at the time it is returned to the factory, is found to have been defective during the warranty period. This warranty does not cover damage or liability for misuse, abuse, or the improper application or installation of the Banner product.

THIS LIMITED WARRANTY IS EXCLUSIVE AND IN LIEU OF ALL OTHER WARRANTIES WHETHER EXPRESS OR IMPLIED (INCLUDING, WITHOUT LIMITATION, ANY WARRANTY OF MERCHANTABILITY OR FITNESS FOR A PARTICULAR PURPOSE), AND WHETHER ARISING UNDER COURSE OF PERFORMANCE, COURSE OF DEALING OR TRADE USAGE.

© Banner Engineering Corp. All rights reserved.
www.bannerengineering.com

This Warranty is exclusive and limited to repair or, at the discretion of Banner Engineering Corp., replacement. **IN NO EVENT SHALL BANNER ENGINEERING CORP. BE LIABLE TO BUYER OR ANY OTHER PERSON OR ENTITY FOR ANY EXTRA COSTS, EXPENSES, LOSSES, LOSS OF PROFITS, OR ANY INCIDENTAL, CONSEQUENTIAL OR SPECIAL DAMAGES RESULTING FROM ANY PRODUCT DEFECT OR FROM THE USE OR INABILITY TO USE THE PRODUCT, WHETHER ARISING IN CONTRACT OR WARRANTY, STATUTE, TORT, STRICT LIABILITY, NEGLIGENCE, OR OTHERWISE.**

Banner Engineering Corp. reserves the right to change, modify or improve the design of the product without assuming any obligations or liabilities relating to any product previously manufactured by Banner Engineering Corp. Any misuse, abuse, or improper application or installation of this product or use of the product for personal protection applications when the product is identified as not intended for such purposes will void the product warranty. Any modifications to this product without prior express approval by Banner Engineering Corp will void the product warranties. All specifications published in this document are subject to change; Banner reserves the right to modify product specifications or update documentation at any time. Specifications and product information in English supersede that which is provided in any other language. For the most recent version of any documentation, refer to: www.bannerengineering.com.

For patent information, see www.bannerengineering.com/patents.

© Banner Engineering Corp. All rights reserved.

LinkedIn

X

Facebook

Instagram



© 2026. All rights reserved.