MODEL NO.	"TL"	"PL"	"L"	"D"	P/N
ITETAI.51S	38.1 [1.5]	25.4 [1.0]	304.8 [12]	2.3 [.09]	22881
ITETAI.52S	38.1 [1.5]	25.4 [1.0]	609.6 [24]	2.3 [.09]	22834
ITETA.759S	38.1 [1.5]	25.4 [1.0]	2743.2 [108]	1.17 [.046]	00000
ITETAI.53SMI.5	38.1 [1.5]	38.1 [1.5]	914.4 [36]	2.3 [.09]	22724
ITETA.53S	38.1 [1.5]	25.4 [1.0]	914.4 [36]	0.81 [.032]	22700
ITETAI5S	38.1 [1.5]	25.4 [1.0]	1524 [60]	1.5 [.06]	22395
ITETAI.51.5S	38.1 [1.5]	25.4 [1.0]	457.2 [18]	2.3 [.09]	22343
ITETAI.53SM.5.	38.1 [1.5]	12.7 [.50]	914.4 [36]	2.3 [.09]	22067
ITETA.753S	38.1 [1.5]	25.4 [1.0]	914.4 [36]	1.17 [.046]	21815
ITETAI3S	38.1 [1.5]	25.4 [1.0]	914.4 [36]	1.5 [.06]	21745
ITETAI.56S	38.1 [1.5]	25.4 [1.0]	1828.8 [72]	2.3 [.09]	21517
ITETAI.53S	38.1 [1.5]	25.4 [1.0]	914.4 [36]	2.3 [.09]	21495

MODEL NO.	"TL"	"PL"	"L"	"D"	P/N
ITETAI.53SMSTMPL	19.1 [.75]	57.2 [2.25]	914.4 [36]	2.3 [.09]	23162
ITETAI.53SM600	38.1 [1.5]	25.4 [1.0]	914.4 [36]	2.3 [.09]	59266
ITETAI.57S	38.1 [1.5]	25.4 [1.0]	2133.6 [84]	2.3 [.09]	23010

NOTES:

1. 'M600' SUFFIX INDICATES THAT FIBERS ARE POTTED ON ANGLED END WITH EPOXY THAT OPERATES IN MAX. TEMPERATURE OF 600°F.

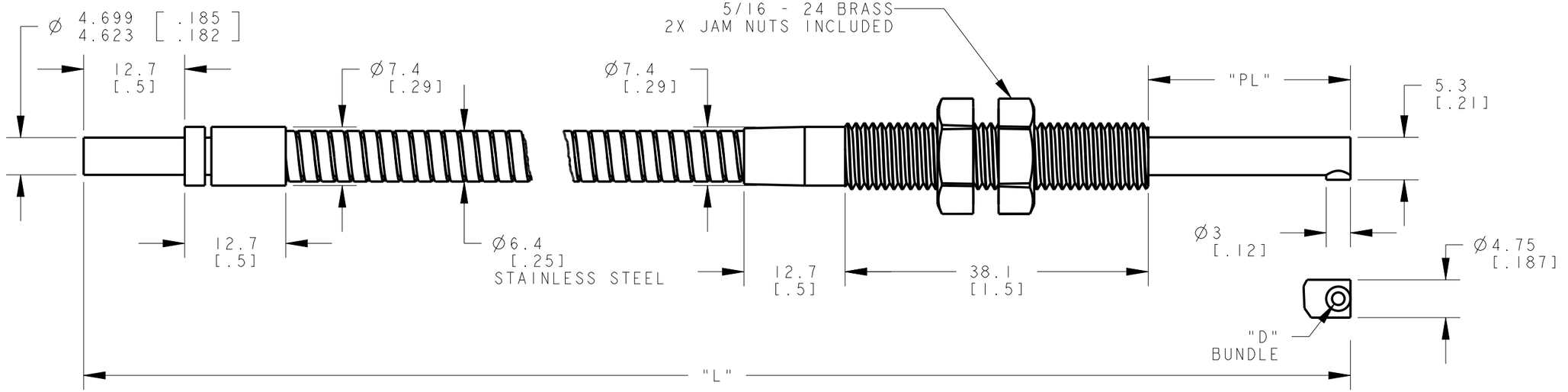

NOTES:
1. ALL DIMENSIONS ARE MILLIMETERS [INCHES] UNLESS OTHERWISE NOTED.
2. REFER TO "www.bannerengineering.com" FOR ADDITIONAL DATA AND SPECIFICATIONS.

This drawing is the property of BANNER ENGINEERING CORP. Any use or reproduction, in any form, without prior written permission of Banner is prohibited.
© Banner Engineering Corp.

THIRD ANGLE PROJECTION

BANNER ENGINEERING CORP.
www.bannerengineering.com

TITLE

ITETAI.5 SERIES SS TERMINATED

SIZE	DRAWING NO.	REV.
B	161913	A

SCALE 7:4 | SHEET 1 OF 2

CREO

ПРОМЭЛЕКТРОНИКА/ sales@prom-elec.com

MODEL NO.	"TL"	"PL"	"L"	"D"	P/N
ITETAI.530SM600	38.1 [1.5]	25.4 [1.0]	9144 [360]	2.3 [.09]	00000
ITETAI.53SMT2MPL	50.8 [2.0]	44.5 [1.75]	914.4 [36]	2.3 [.09]	23984
ITETAI.53SM.75	38.1 [1.5]	19.1 [.75]	914.4 [36]	2.3 [.09]	00000
ITETAI1S	38.1 [1.5]	25.4 [1.0]	381 [12]	1.57 [.062]	24127
ITETA.756S	38.1 [1.5]	25.4 [1]	1828.8 [72]	1.17 [.046]	24408
ITETAI.53SM3	38.1 [1.5]	76.2 [3.0]	914.4 [36]	1.57 [.062]	00000
ITETAI8S	38.1 [1.5]	25.4 [1]	24380.4 [96]	1.57 [.062]	24665
ITETAI.59S	38.1 [1.5]	25.4 [1]	2743.2 [108]	2.3 [.09]	83022
ITETAI3SM600	38.1 [1.5]	25.4 [1]	914.4 [36]	1.57 [.062]	24747
ITETAI10S	38.1 [1.5]	25.4 [1]	3048 [120]	1.57 [.062]	00000
ITETAI6SM600	38.1 [1.5]	25.4 [1]	1828.8 [72]	1.57 [.062]	24834
ITETAI.5SM600	38.1 [1.5]	25.4 [1]	152.4 [6]	1.57 [.062]	00000
ITETA.751S	38.1 [1.5]	25.4 [1.0]	381 [12]	1.17 [.046]	00000
ITETA.758S	38.1 [1.5]	25.4 [1.0]	24380.4 [96]	1.17 [.046]	64461
ITETA.753SM600	38.1 [1.5]	25.4 [1.0]	914.4 [36]	1.17 [.046]	78748
ITETA.755SM600	38.1 [1.5]	25.4 [1.0]	1524 [60]	1.17 [.046]	68604
ITETAI.510S	38.1 [1.5]	25.4 [1.0]	3048 [120]	2.3 [.09]	71188
ITETA.754S	38.1 [1.5]	25.4 [1.0]	1219.2 [48]	1.17 [.046]	72305
ITETAI.58.5S	38.1 [1.5]	25.4 [1.0]	2590.8 [102]	2.3 [.09]	75897
ITETA.753SM.5	38.1 [1.5]	12.7 [.50]	914.4 [36]	1.17 [.046]	00000
ITETAI.53SM5	38.1 [1.5]	127 [5.0]	914.4 [36]	2.3 [.09]	00000
ITETAI.54SM.25	38.1 [1.5]	6.35 [.25]	1219.2 [48]	2.3 [.09]	81396
ITETAI.53SMT2	50.8 [2.0]	25.4 [1.0]	914.4 [36]	2.3 [.09]	00000
ITETAI.5S	38.1 [1.5]	25.4 [1.0]	152.4 [6]	1.5 [.06]	00000
ITETAI2S	38.1 [1.5]	25.4 [1.0]	609.6 [24]	1.5 [.06]	00000
ITETAI.55S	38.1 [1.5]	25.4 [1.0]	1524 [60]	2.3 [.09]	62294
ITETAI6S	38.1 [1.5]	25.4 [1.0]	1828.8 [72]	1.5 [.06]	24425

MODEL NO.	"TL"	"PL"	"L"	"D"	P/N
ITETAI4S	38.1 [1.5]	25.4 [1.0]	1219.2 [48]	1.5 [.06]	23882
ITETAI.56SM600	38.1 [1.5]	25.4 [1.0]	1828.8 [72]	2.3 [.09]	23658
ITETAI.54S	38.1 [1.5]	25.4 [1.0]	1219.2 [48]	2.3 [.09]	23626
ITETAI.515S	38.1 [1.5]	25.4 [1.0]	4572 [180]	2.3 [.09]	70794
ITETA.755S	38.1 [1.5]	25.4 [1.0]	1524 [60]	1.17 [.046]	23410
ITETA.753SMT.5	12.7 [.50]	25.4 [1.0]	914.4 [36]	1.17 [.046]	23246

NOTES:

1. 'M600' SUFFIX INDICATES THAT FIBERS ARE POTTED ON ANGLED END WITH EPOXY THAT OPERATES IN MAX. TEMPERATURE OF 600°F.

NOTES:
1. ALL DIMENSIONS ARE MILLIMETERS [INCHES] UNLESS OTHERWISE NOTED.
2. REFER TO "www.bannerengineering.com" FOR ADDITIONAL DATA AND SPECIFICATIONS.

This drawing is the property of BANNER ENGINEERING CORP. Any use or reproduction, in any form, without prior written permission of Banner is prohibited.
© Banner Engineering Corp.

THIRD ANGLE PROJECTION

BANNER ENGINEERING CORP.
www.bannerengineering.com

TITLE

ITETAI.5 SERIES SS TERMINATED

SIZE	DRAWING NO.	REV.
B	161913	A
SCALE 7:4		SHEET 2 OF 2

CREO