MODEL NO.	"L"	P/N
PBP46UHF	2000 [79]	51788
PBP415UHF	5000 [197]	61196

*SUFFIX 'HF' DENOTES HIGH-FLEX FIBER CABLE-VERY SMALL BEND RADIUS PERMISSIBLE BEFORE TRANSMISSION LOSS. PROBE LENGTHS < 18mm[.7 in] ARE NOT BENDABLE.

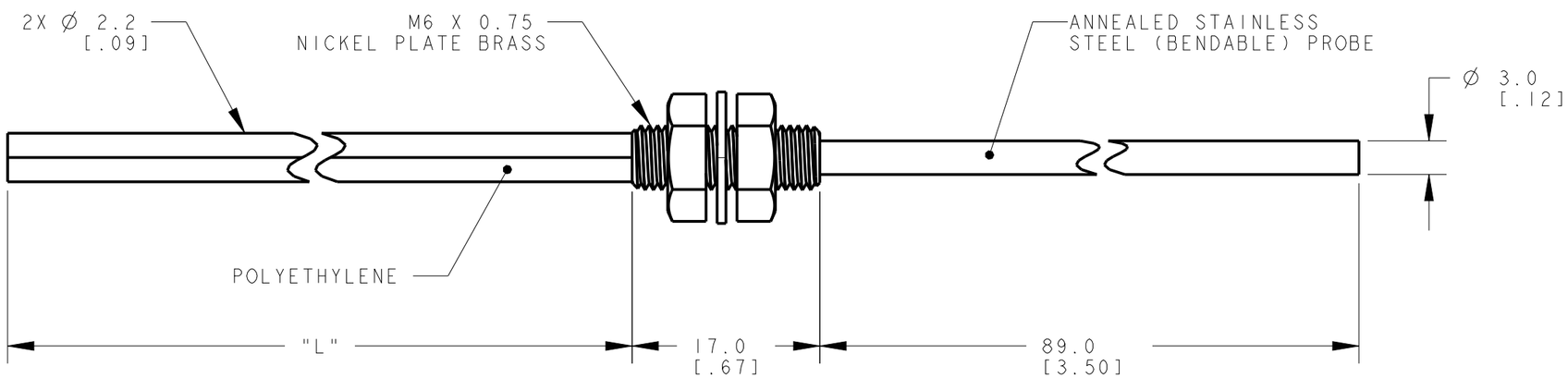

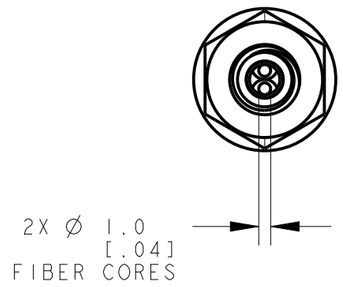

NOTES:
1. ALL DIMENSIONS ARE MILLIMETERS [INCHES] UNLESS OTHERWISE NOTED.
2. REFER TO "www.bannerengineering.com" FOR ADDITIONAL DATA AND SPECIFICATIONS.

This drawing is the property of BANNER ENGINEERING CORP. Any use or reproduction, in any form, without prior written permission of Banner is prohibited.
© 2015 Banner Engineering Corp.

THIRD ANGLE PROJECTION

BANNER ENGINEERING CORP.
www.bannerengineering.com

TITLE

PBP4 HF SERIES UNTERMINATED

SIZE	DRAWING NO.	REV.
B	192794	A
SCALE 2:1	SHEET 1 OF 1	

CREO

ПРОМЭЛЕКТРОНИКА/ sales@prom-elec.com