Glass Fibers

more sensors, more solutions

Datasheet

Glass fiber optic assemblies are rugged and perform reliably in extreme temperatures and corrosive or vacuum chamber environments. Glass fiber optic assemblies can transmit both visible and infrared light and can be custom designed to meet application requirements.

- Powerful and rugged
- Carry infrared light to provide a longer range
- Withstand temperatures of up to 249 °C (480 °F) and harsh chemicals

Glass Fiber Models

Diffuse Mode—Bifurcated Fiber Models				
Model	**Length**	**Bundle Diameter**	**Tip**	
BT13S	914 mm (36 in)	1.6 mm (0.062 in)	Bifurcated fiber with a 5/16-24 UNF threaded tip; stainless steel monocoil sheathing	
BAT23S	914 mm (36 in)	3.2 mm (0.125 in)	Bifurcated fiber with a right angle 5/16-24 UNF threaded tip; stainless steel monocoil sheathing	
BT23S	914 mm (36 in)	3.2 mm (0.125 in)	Bifurcated fiber with a 5/16-24 UNF threaded tip; stainless steel monocoil sheathing	
BTA23S	914 mm (36 in)	3.2 mm (0.125 in)	Bifurcated fiber with a 5/16-24 UNF thread and an angled tip; stainless steel monocoil sheathing	
BT26S	1.8 m (72 in)	3.2 mm (0.125 in)	Bifurcated fiber with a 5/16-24 UNF threaded tip; stainless steel monocoil sheathing	

Opposed Mode—Individual Fiber Models				
Model	**Length**	**Bundle Diameter**	**Tip**	
IA13S	914 mm (36 in)	1.6 mm (0.062 in)	Right angled probe tip; stainless steel monocoil sheathing	
IA23S	914 mm (36 in)	3.2 mm (0.125 in)	Right angled probe tip; stainless steel monocoil sheathing	
IAT23S	914 mm (36 in)	3.2 mm (0.125 in)	Right angled 5/16-24 UNF threaded tip; stainless steel monocoil sheathing	
IT23S	914 mm (36 in)	3.2 mm (0.125 in)	5/16-24 UNF threaded tip; stainless steel monocoil sheathing	

Original Document
214505 Rev. B

23 March 2020

214505

ПРОМЭЛЕКТРОНИКА/ sales@prom-elec.com

Opposed Mode—Individual Fiber Models				
Model	**Length**	**Bundle Diameter**	**Tip**	
ITA23S	914 mm (36 in)	3.2 mm (0.125 in)	Right angled 5/16-24 UNF threaded tip; stainless steel monocoil sheathing	
IT26S	1.8 m (72 in)	3.2 mm (0.125 in)	5/16-24 UNF threaded tip; stainless steel monocoil sheathing	
IAT26S	1.8 m (72 in)	3.2 mm (0.125 in)	Right angled 5/16-24 UNF threaded tip; stainless steel monocoil sheathing	
ITETA1.53S	914 mm (36 in)	2.29 mm (0.09 in)	5/16 × 24 threaded tip with a side exit 4.75 mm probe; stainless steel monocoil sheathing	

Opposed Mode—Individual Fiber Models; Vantage Line				
Model	**Length**	**Bundle Diameter**	**Tip**	
IAT43ST5TA-VL	914 mm (36 in)	1 mm (0.039 in)	Threaded right-angle M4 with M2.5 Tip; stainless steel monocoil sheathing and terminated for plastic fiber sensors	

Installation Instructions

Installing the Fibers in a DF-Gx Sensor

Follow these steps to install glass or plastic fibers.

1. Open the dust cover.
2. Move the fiber clamp forward to unlock it.
3. Insert the fiber(s) into the fiber port(s) until they stop.
4. Move the fiber clamp backward to lock the fiber(s).
5. Close the dust cover.

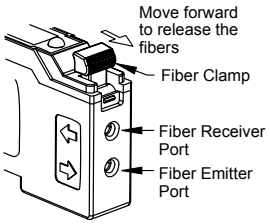

Note: For optimum performance of IR models, if applicable, glass fibers must be used.

Installing the Glass Fibers in MINI-BEAMs

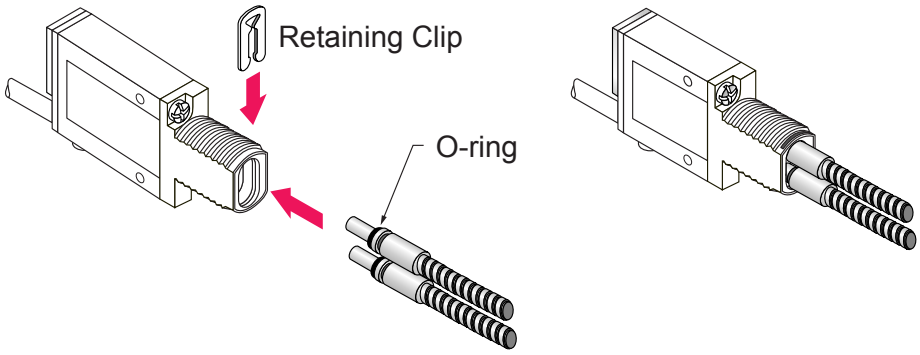

1. Install the O-ring (supplied with the fiber) on each fiber end, as shown in the drawing.
2. While pressing the fiber ends firmly into the ports on the sensor front, slide the U-shaped retaining clip (supplied with the sensor) into the slot in the sensor's barrel, until it snaps into place.

Installing Glass Fibers

1. Gently seat an o-ring onto each sensor end of the fiber.

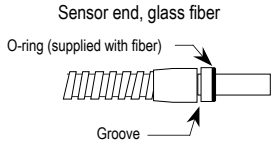

2. Slide the sensor ends into the fiber ports as far as they will go.
3. Push firmly on the fiber ends to compress the o-ring, and while holding the sensor ends snugly in place, slide the fiber retaining clip into the slot.
4. Press the retaining clip in until it snaps into the groove.

Specifications

Sensing Range
Refer to the specific fiber optic to be used

Construction
Optical glass fiber, stainless steel or PVC, brass, molded thermoplastics, and optical-grade epoxy
Optical fiber is F2 core, EN1 clad, approx. 50 µm diameter per strand.
Flexible steel interlock sheathing is 302 stainless

Operating Conditions
Fiber assemblies with stainless-steel (SS) sheathing and metal end tips: –140 °C to +249 °C (–220 °F to +480 °F)
Fiber assemblies with PVC sheathing and/or plastic end tips: –40 °C to +105 °C (–40 °F to +221 °F)

Bend Radius
Inside bend radius must be 12 mm or greater for PVC covered fiber optic assemblies, and 25 mm or greater for stainless steel armored cable covered fibers

Length Dimension Tolerance
Overall assembly length: ±12 mm per 300 mm of length
Shrink junction dimensions: ±12 mm

Implied Dimensional Tolerances
All dimensions are in millimeters: x = ±2.5 mm, x.x = ±0.25 mm and x.xx = ±0.12 mm, unless specified

Application Notes and Warnings

The ends of glass fiber optic assemblies are optically ground and polished. Care taken in this manufacturing process accounts for the light coupling efficiency of the fiber optic assembly. As a result, glass fiber assemblies cannot be shortened, spliced or otherwise modified.

Use caution when applying fiber optics in hazardous locations. Although fiber optic assemblies are by themselves, intrinsically safe, the sensor and associated electronics must be LOCATED IN A SAFE ENVIRONMENT. This sensor is approved for use inside hazardous areas when used with an appropriate intrinsic barrier. Also, see NAMUR sensor models Q45AD9F and MIAD9F. Fiber optics do not necessarily provide a hermetic seal between a hazardous environment and the safe environment.

In applications where glass fibers need to insulate the control from high voltage, specify silicone rubber, Teflon®[1], or high-density polyethylene sheathing with no reinforcing wire in the cable. It is the responsibility of the user to test each fiber optic assembly for insulation capacity.

Do not subject the fibers to sharp bends, pinching, repeated flexing, or high levels of radiation.

When ordering fiber lengths in excess of 1 m, take into account light signal reduction of 5 percent per 300 mm of additional length.

Banner Engineering Corp. Limited Warranty

Banner Engineering Corp. warrants its products to be free from defects in material and workmanship for one year following the date of shipment. Banner Engineering Corp. will repair or replace, free of charge, any product of its manufacture which, at the time it is returned to the factory, is found to have been defective during the warranty period. This warranty does not cover damage or liability for misuse, abuse, or the improper application or installation of the Banner product.

THIS LIMITED WARRANTY IS EXCLUSIVE AND IN LIEU OF ALL OTHER WARRANTIES WHETHER EXPRESS OR IMPLIED (INCLUDING, WITHOUT LIMITATION, ANY WARRANTY OF MERCHANTABILITY OR FITNESS FOR A PARTICULAR PURPOSE), AND WHETHER ARISING UNDER COURSE OF PERFORMANCE, COURSE OF DEALING OR TRADE USAGE.

This Warranty is exclusive and limited to repair or, at the discretion of Banner Engineering Corp., replacement. **IN NO EVENT SHALL BANNER ENGINEERING CORP. BE LIABLE TO BUYER OR ANY OTHER PERSON OR ENTITY FOR ANY EXTRA COSTS, EXPENSES, LOSSES, LOSS OF PROFITS, OR ANY INCIDENTAL, CONSEQUENTIAL OR SPECIAL DAMAGES RESULTING FROM ANY PRODUCT DEFECT OR FROM THE USE OR INABILITY TO USE THE PRODUCT, WHETHER ARISING IN CONTRACT OR WARRANTY, STATUTE, TORT, STRICT LIABILITY, NEGLIGENCE, OR OTHERWISE.**

Banner Engineering Corp. reserves the right to change, modify or improve the design of the product without assuming any obligations or liabilities relating to any product previously manufactured by Banner Engineering Corp. Any misuse, abuse, or improper application or installation of this product or use of the product for personal protection applications when the product is identified as not intended for such purposes will void the product warranty. Any modifications to this product without prior express approval by Banner Engineering Corp will void the product warranties. All specifications published in this document are subject to change; Banner reserves the right to modify product specifications or update documentation at any time. Specifications and product information in English supersede that which is provided in any other language. For the most recent version of any documentation, refer to: www.bannerengineering.com.

For patent information, see www.bannerengineering.com/patents.

[1] Teflon® is a registered trademark of Dupont™.

© Banner Engineering Corp. All rights reserved