Quick Start Guide

30 mm Programmable Multicolor RGB Optical Sensor and Indicator

This guide is designed to help you set up and install the K30 Pro Optical Sensor. For complete information on programming, performance, troubleshooting, dimensions, and accessories, please refer to the Instruction Manual at www.bannerengineering.com. Search for part number 231384 to view the Instruction Manual. Use of this document assumes familiarity with pertinent industry standards and practices.

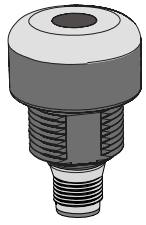

- Programmable using Banner's Pro Editor software and Pro Converter Cable
- Up to 7 colors in one device (14 colors using Pro Editor)
- Devices are completely self-contained—no controller needed
- Teachable modes with color feedback for ease of use
- Touchless activation removes the need for physical force to activate
- Rated IP65
- 10 V DC to 30 V DC operation
- Resistant to ambient light, EMI, and RFI interference
- Sensing and indication in one device

WARNING:

- **Do not use this device for personnel protection**
- Using this device for personnel protection could result in serious injury or death.
- This device does not include the self-checking redundant circuitry necessary to allow its use in personnel safety applications. A device failure or malfunction can cause either an energized (on) or de-energized (off) output condition.

Models

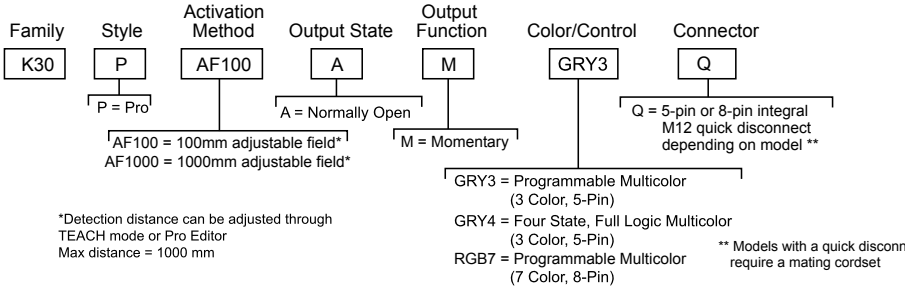

Overview

The K30 Pro Optical Sensor is an adjustable field optical sensor that can detect a wide variety of materials and objects.

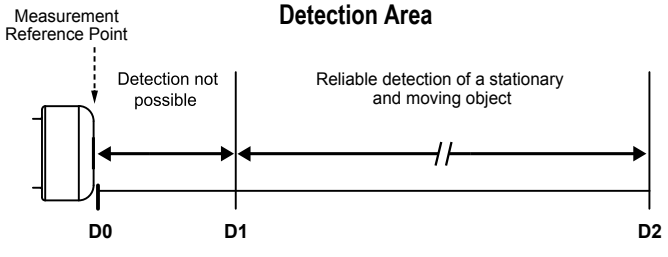

Model	D0 (mm)	Switch Point D1 (mm)	Switch Point D2 (mm)
K30PAF1000	0	20	1000

Original Instructions
July 17, 2023

© Banner Engineering Corp.

p/n: 232898 Rev. C

ПРОМЭЛЕКТРОНИКА/ sales@prom-elec.com

Wiring Diagrams

GRY3 Models

NPN

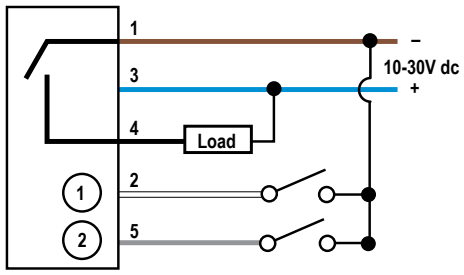

PNP

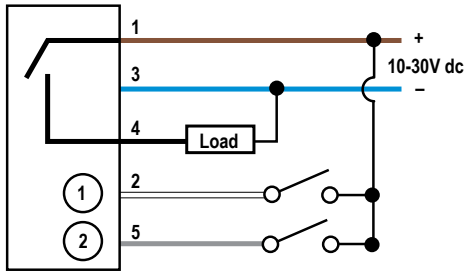

Pin 1 = Brown
Pin 2 = White
Pin 3 = Blue
Pin 4 = Black
Pin 5 = Gray (Remote Input)

GRY3 Multicolor Color/Function Definition

	Green	Yellow	Red
Input 1	X	X	
Input 2		X	X

GRY4 Models

NPN

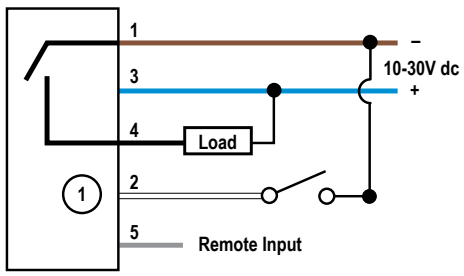

PNP

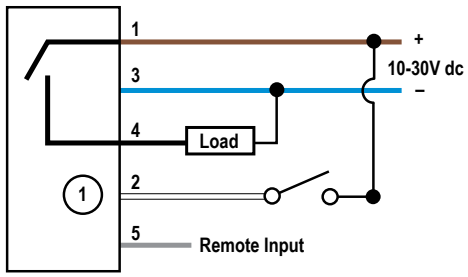

Pin 1 = Brown
Pin 2 = White
Pin 3 = Blue
Pin 4 = Black
Pin 5 = Gray (Remote Input)

GRY4 Four State Full Logic

	No Detection	Detection
No Input	State 1: Indicator Off	State 3: Indicator Red
Input 1	State 2: Indicator Green	State 4: Indicator Yellow

RGB7 Models

NPN

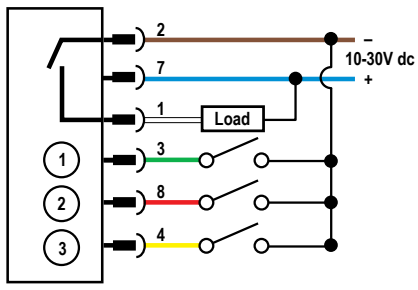

PNP

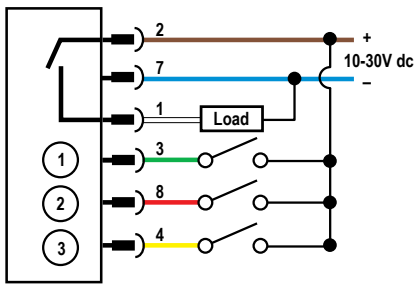

Pin 1 = White
Pin 2 = Brown
Pin 3 = Green
Pin 4 = Yellow (Remote Input)
Pin 5 = Not used
Pin 6 = Not used
Pin 7 = Blue
Pin 8 = Red

RGB Multicolor Color/Function Definition

	Red	Yellow	Green	Cyan	Blue	Magenta	White
Input 1	X	X				X	X
Input 2		X	X	X			X

Continued on page 3

© Banner Engineering Corp.

Continued from page 2

	Red	Yellow	Green	Cyan	Blue	Magenta	White
Input 3				X	X	X	X

Configuring a Sensor

The K30 Pro Optical Sensor has three Teach modes. These modes are indicated with a Teach Status color.

The Signal Level color flashes in between the Teach Status color. The color of the Signal Level depends on the signal strength of the target:
Green: Best signal, accepts Teach
Yellow: Acceptable signal, can accept Teach
Red: Poor signal, rejects Teach

Remote Input

Use the remote input to program the sensor remotely.

The remote input provides limited programming options and is Active High in PNP mode (V+ to brown wire), or Active Low in NPN mode (V+ to blue wire). For Active High, pulse the gray or yellow input wire to V+ (10 V DC to 30 V DC). For Active Low, pulse the gray or yellow input wire to ground (0 V DC).

The remote input wire is enabled by default. Pulse the remote input wire 7 times or use the Banner Pro Editor software to enable or disable the feature. When the remote input feature is enabled, pulse the remote input according to the diagram and the instructions provided in this manual. Remote teach can also be performed using the button on the Pro Converter Cable.

The length of the individual programming pulses is equal to the value T: **0.04 seconds ≤ T ≤ 0.8 seconds**.

Exit remote programming modes by cycling power or by waiting for 30 seconds.

> **NOTE:** If a factory reset is performed through the Banner Pro Editor Software, the remote input wire becomes enabled (factory default setting). If the sensor is returned to factory defaults by using the remote input wire, the input wire remains enabled and the rest of the settings are restored to factory defaults.

Remote Teach

Use the following procedure to teach the Set Point.

1. Pulse the remote input:
   - 3x - Object Teach: The indicator alternates between a blue Teach Status color and the Signal Level color.
   - 4x - Background Teach: The indicator alternates between a magenta Teach Status color and the Signal Level color.
   - 5x - Window Teach: The indicator alternates between a cyan Teach Status color and the Signal Level color.
2. Present the Set Point.
3. Teach the Set Point.

Action		Result
Single pulse the remote input.		**Teach Accepted** The indicator stops flashing and the device returns to operation. **Teach Not Accepted** The Signal Level color turns red during the teach procedure, and then the indicator stops flashing. Retry teaching the set point.

© Banner Engineering Corp.

Remote Input Map

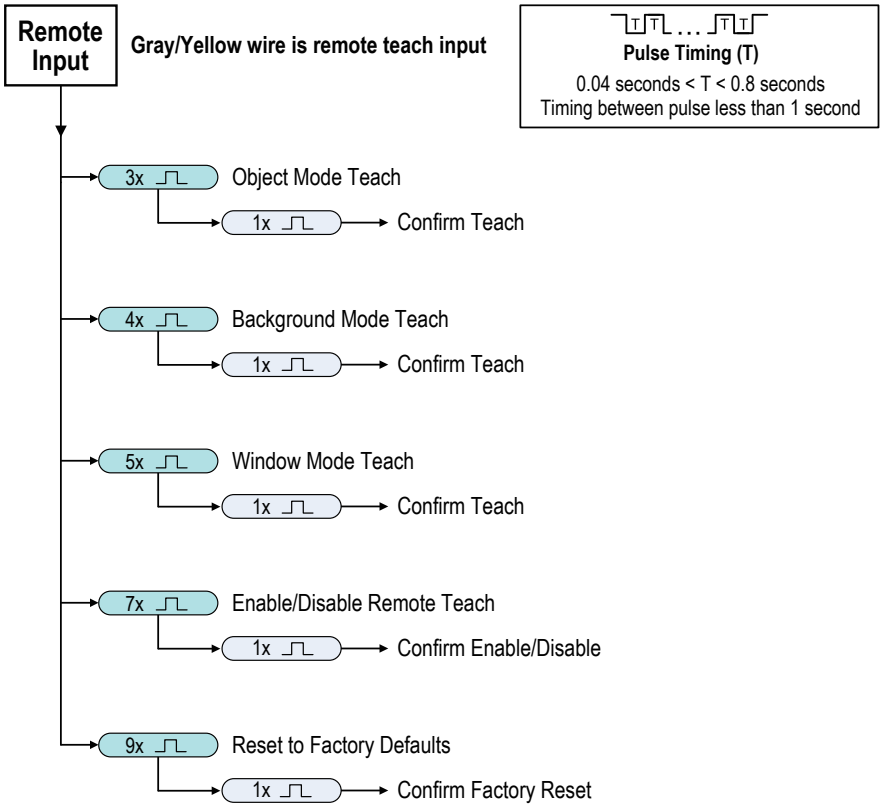

Specifications

Supply Voltage (Vcc)
10 V DC to 30 V DC

Supply Current
110 mA maximum current at 30 V DC (exclusive of load)
30 mA typical current at 24 V DC (exclusive of load)

Supply Protection Circuitry
Protected against output short-circuit

Leakage Current Immunity
400 µA

Range
The sensor can detect an object at the following ranges, depending on the material and size of the target: 20 mm to 1000 mm

Output Ratings
Maximum Load: 150 mA
ON-State Saturation Voltage:
< 2 V DC at 10 mA
< 2.5 V DC at 150 mA
OFF-State Leakage Current: < 10 µA at 30 V DC

Remote Input
Allowable Input Voltage Range: 0 to Vsupply
Active High (internal weak pull-down): High state > (Vsupply - 2.25 V) at 2 mA maximum
Active Low (internal weak pull-up): Low state < 2.25 V at 2 mA maximum

Mounting
M22 × 1.5 threaded base, maximum torque 4.5 N·m (40 in·lbf)

Construction
Base, Dome, and Nut: Polycarbonate

Connections
Integral 5-pin or 8-pin M12 male quick-disconnect connector
Models with a quick disconnect require a mating cordset

NOTE: A shielded cable is required if the sensor is mounted outdoors or if the cable is longer than 30 m (98.4 ft).

Vibration and Mechanical Shock
All models meet MIL-STD-202F, Method 201A (Vibration: 10 Hz to 60 Hz maximum, 0.06 inch (1.52 mm) double amplitude, 10G acceleration) requirements. Method 213B conditions H&I.Shock: 75G with device operating; 100G for non-operation

Operating Temperature
–20 °C to +50 °C (–4 °F to +122 °F)

Storage Temperature
–40 °C to +70 °C (–40 °F to +158 °F)

Sensing Beam
Infrared, 940 nm

Delay at Power-up
< 1 s

Response Time
Switching frequency: 4 Hz
Discrete output response: 120 ms

© Banner Engineering Corp.

Repeatability

5 mm from 20 to 300 mm

8 mm from 300 mm to 600 mm

14 mm from 600 mm to 1000 mm

Temperature Effect

<±5 mm from –20 °C to +50 °C (–4 °F to +122 °F)

Application Note

For the most accurate measurements, allow 5 minutes for the sensor to warm up

Environmental Rating

IP65

Pro Editor Configuration

Connection to Pro Editor software enables control of:

- **Animation:** Steady, Flash, Two Color Flash, 50/50, 50/50 Rotate, Chase, Intensity Sweep, Color Sweep, Wave, Double Wave
- **Color:** Green, Red, Yellow, Blue, White, Cyan, Magenta, Amber, Rose, Lime Green, Orange, Sky Blue, Violet, Spring Green
- **Intensity:** Low, Medium, High
- **Speed:** Slow, Standard, Fast
- **Output State:** Normally Open, Normally Closed, Momentary, Latching, On Delay, Off Delay
- **Logic Type:** Three State Advanced Control (F2 Mode), Seven State Advanced Control (F2 Mode), Four State Full Logic (Custom)

Pro Converter Cable required to interface between PC and indicator, see accessories

Required Overcurrent Protection

WARNING: Electrical connections must be made by qualified personnel in accordance with local and national electrical codes and regulations.

Overcurrent protection is required to be provided by end product application per the supplied table.

Overcurrent protection may be provided with external fusing or via Current Limiting, Class 2 Power Supply.

Supply wiring leads < 24 AWG shall not be spliced.

For additional product support, go to www.bannerengineering.com.

Supply Wiring (AWG)	Required Overcurrent Protection (A)	Supply Wiring (AWG)	Required Overcurrent Protection (A)
20	5.0	26	1.0
22	3.0	28	0.8
24	1.0	30	0.5

Certifications

Banner Engineering BV
Park Lane, Culliganlaan 2F bus 3
1831 Diegem, BELGIUM

Turck Banner LTD Blenheim House
Blenheim Court
Wickford, Essex SS11 8YT
GREAT BRITAIN

FCC Part 15 Class B

This equipment has been tested and found to comply with the limits for a Class B digital device, pursuant to part 15 of the FCC Rules. These limits are designed to provide reasonable protection against harmful interference in a residential installation. This equipment generates, uses and can radiate radio frequency energy and, if not installed and used in accordance with the instructions, may cause harmful interference to radio communications. However, there is no guarantee that interference will not occur in a particular installation. If this equipment does cause harmful interference to radio or television reception, which can be determined by turning the equipment off and on, the user is encouraged to try to correct the interference by one or more of the following measures:

- Reorient or relocate the receiving antenna.
- Increase the separation between the equipment and receiver.
- Connect the equipment into an outlet on a circuit different from that to which the receiver is connected.
- Consult the dealer or an experienced radio/TV technician for help.

Industry Canada ICES-003(B)

This device complies with CAN ICES-3 (B)/NMB-3(B). Operation is subject to the following two conditions: 1) This device may not cause harmful interference; and 2) This device must accept any interference received, including interference that may cause undesired operation.

Cet appareil est conforme à la norme NMB-3(B). Le fonctionnement est soumis aux deux conditions suivantes : (1) ce dispositif ne peut pas occasionner d'interférences, et (2) il doit tolérer toute interférence, y compris celles susceptibles de provoquer un fonctionnement non souhaité du dispositif.

© Banner Engineering Corp.

Dimensions

All measurements are listed in millimeters [inches], unless noted otherwise.

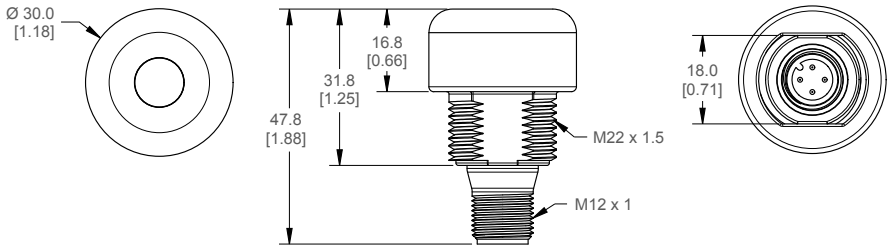

Beam Pattern

Typical beam pattern, in millimeters

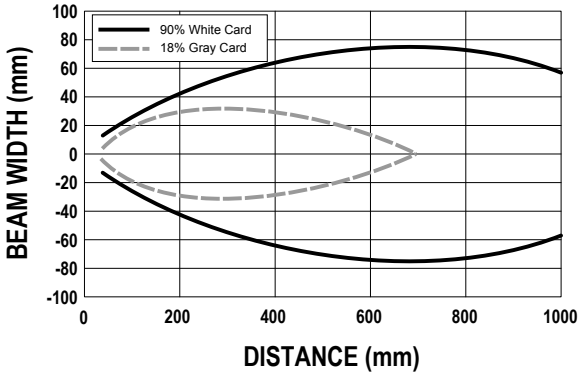

Banner Engineering Corp Limited Warranty

Banner Engineering Corp. warrants its products to be free from defects in material and workmanship for one year following the date of shipment. Banner Engineering Corp. will repair or replace, free of charge, any product of its manufacture which, at the time it is returned to the factory, is found to have been defective during the warranty period. This warranty does not cover damage or liability for misuse, abuse, or the improper application or installation of the Banner product.

THIS LIMITED WARRANTY IS EXCLUSIVE AND IN LIEU OF ALL OTHER WARRANTIES WHETHER EXPRESS OR IMPLIED (INCLUDING, WITHOUT LIMITATION, ANY WARRANTY OF MERCHANTABILITY OR FITNESS FOR A PARTICULAR PURPOSE), AND WHETHER ARISING UNDER COURSE OF PERFORMANCE, COURSE OF DEALING OR TRADE USAGE.

This Warranty is exclusive and limited to repair or, at the discretion of Banner Engineering Corp., replacement. **IN NO EVENT SHALL BANNER ENGINEERING CORP. BE LIABLE TO BUYER OR ANY OTHER PERSON OR ENTITY FOR ANY EXTRA COSTS, EXPENSES, LOSSES, LOSS OF PROFITS, OR ANY INCIDENTAL, CONSEQUENTIAL OR SPECIAL DAMAGES RESULTING FROM ANY PRODUCT DEFECT OR FROM THE USE OR INABILITY TO USE THE PRODUCT, WHETHER ARISING IN CONTRACT OR WARRANTY, STATUTE, TORT, STRICT LIABILITY, NEGLIGENCE, OR OTHERWISE.**

Banner Engineering Corp. reserves the right to change, modify or improve the design of the product without assuming any obligations or liabilities relating to any product previously manufactured by Banner Engineering Corp. Any misuse, abuse, or improper application or installation of this product or use of the product for personal protection applications when the product is identified as not intended for such purposes will void the product warranty. Any modifications to this product without prior express approval by Banner Engineering Corp will void the product warranties. All specifications published in this document are subject to change; Banner reserves the right to modify product specifications or update documentation at any time. Specifications and product information in English supersede that which is provided in any other language. For the most recent version of any documentation, refer to: www.bannerengineering.com.

For patent information, see www.bannerengineering.com/patents.

© Banner Engineering Corp.