BP12 Series Fibers

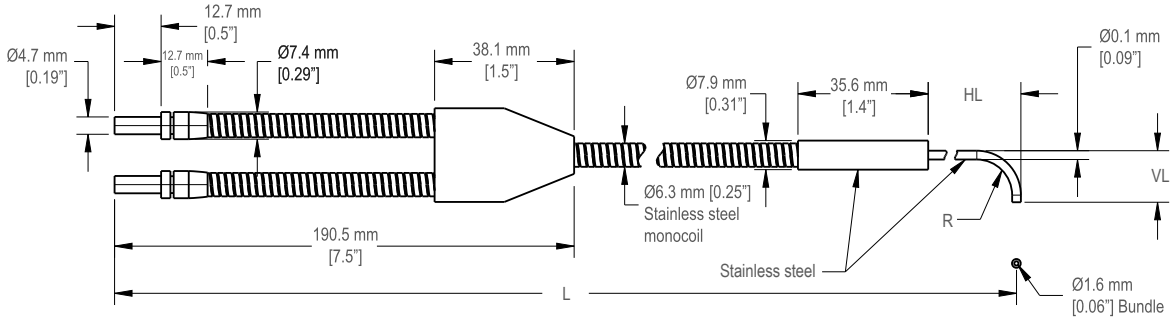

Model	CAD Files	D	L	HL	VL	R
BP12SMA1X.25	CAD files: DXF, PDF, IGS, STP	0.062	609.6 mm (24")	25.4 mm (1")	3.4 mm (0.25")	3.1 mm (0.12")

BP13 Series Fibers

BP13P Fiber

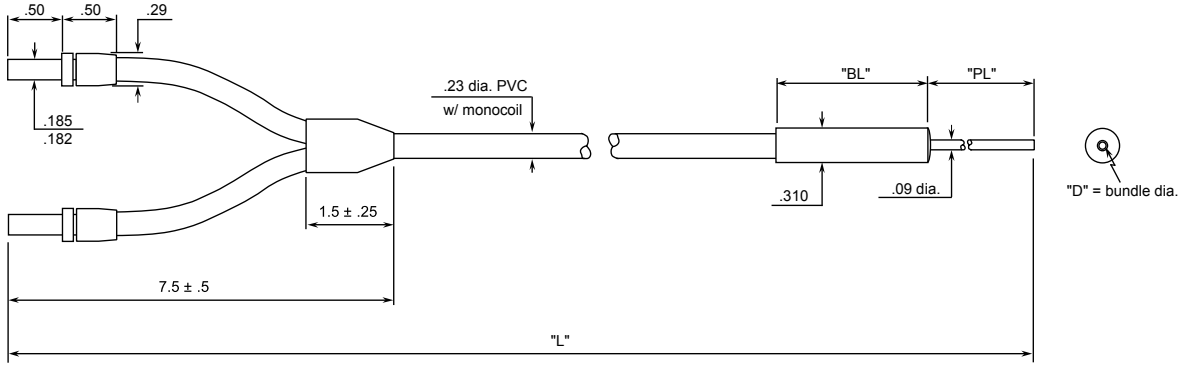

Model	CAD Files	L (in)	D (in)	PL (in)	BL (in)
BP13P	CAD files: PDF	36	0.062	3	1.4

BP13PMA1.25X1.35 Fiber

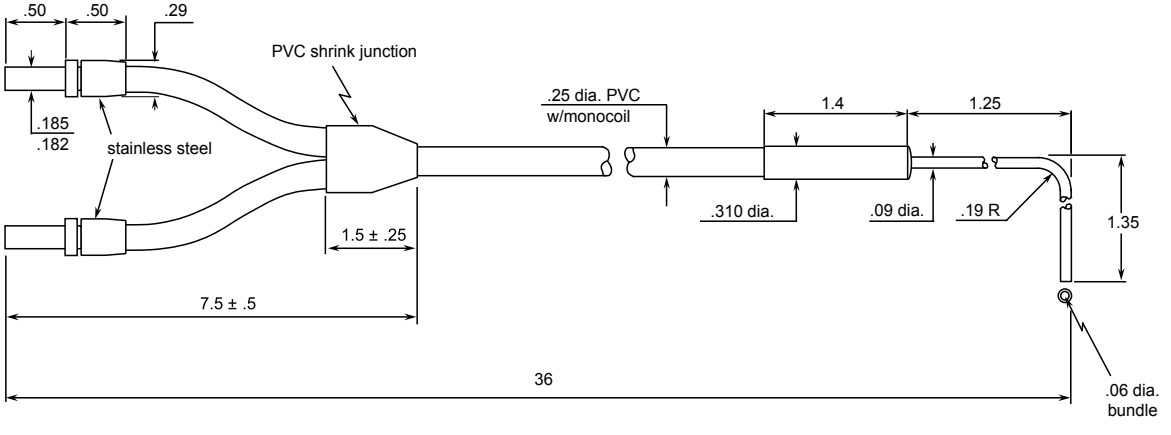

© Banner Engineering Corp. All rights reserved.
www.bannerengineering.com

b_51965622
p/n: b_51965622 Rev. A

ПРОМЭЛЕКТРОНИКА/ sales@prom-elec.com

BP1xS Fibers

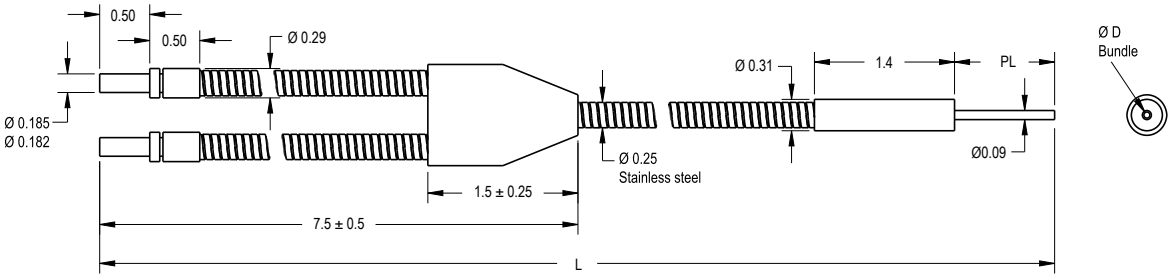

Model	CAD Files	D (in)	L (in)	PL (in)
BP13S	CAD files: PDF	0.06	36	3
BP13SM1		0.06	36	1

© Banner Engineering Corp. All rights reserved.
www.bannerengineering.com