MODEL NO.	"L"	P/N
PBAT46UHFTA-VL	2000	88142
PBAT43UHFTA-VL	1000	88141

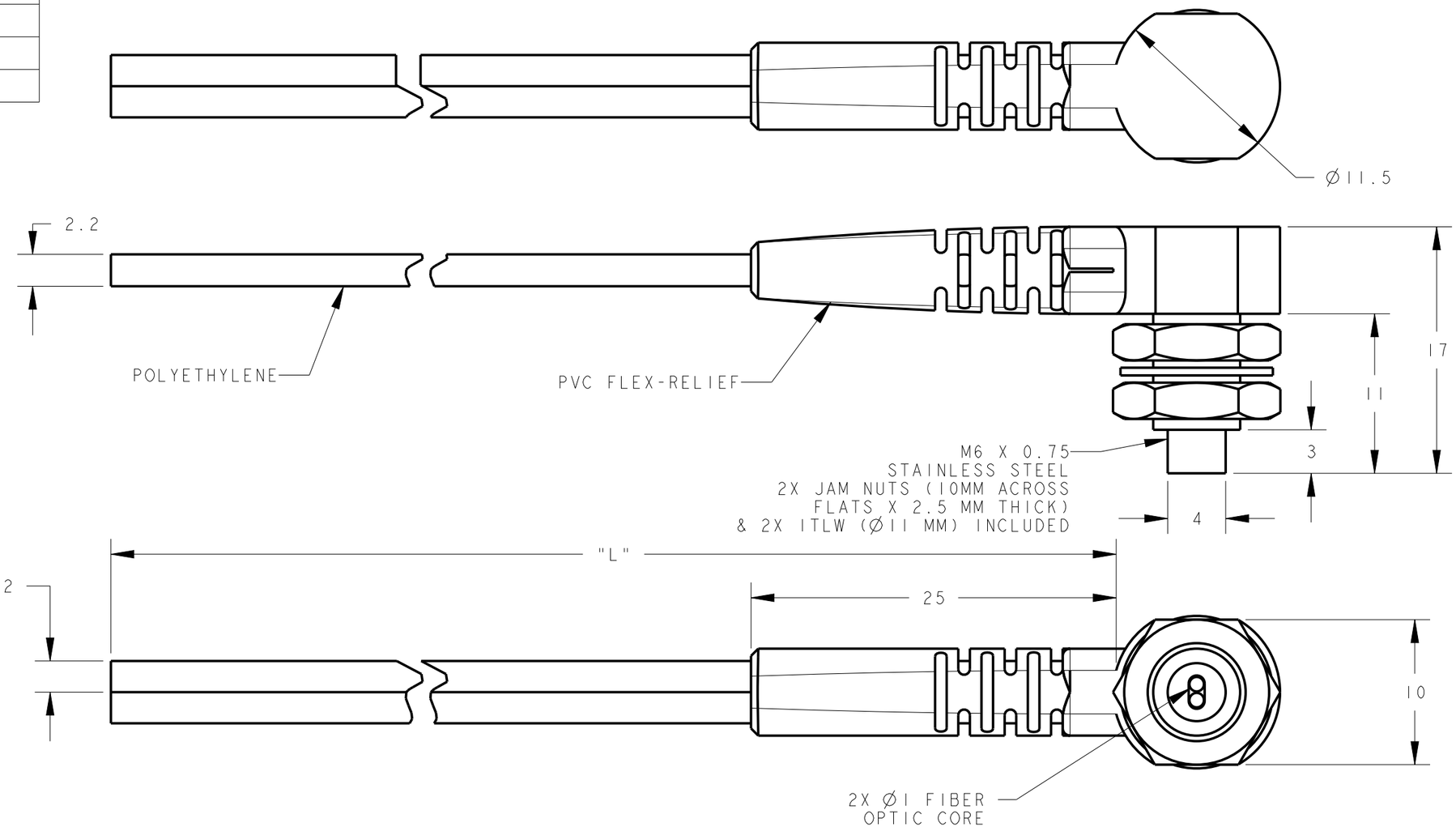

NOTES:

1. OPERATING TEMPERATURE -55°C ~ +70°C.
2. MINIMUM BEND RADIUS R2.

This drawing is the property of BANNER ENGINEERING CORP. Any use or reproduction, in any form, without prior written permission of Banner is prohibited.
© 2015 Banner Engineering Corp.

THIRD ANGLE PROJECTION

BANNER ENGINEERING CORP.
www.bannerengineering.com

TITLE

PBAT4 VALUE LINE SERIES UNTERMINATED

SIZE	DRAWING NO.	REV.
B	178359	B
SCALE 3:1	SHEET 1 OF 1	

CREO

NOTES:
1. ALL DIMENSIONS ARE MILLIMETERS [INCHES] UNLESS OTHERWISE NOTED.
2. REFER TO "www.bannerengineering.com" FOR ADDITIONAL DATA AND SPECIFICATIONS.

ПРОМЭЛЕКТРОНИКА/ sales@prom-elec.com