PGP Features

Pressure sensors convert the process pressure of a liquid or a gas to an electrical output that can be used in a control system. These sensors interface directly to the process using a threaded pipe fitting. They are suitable for measuring the pressure of gas, vapors, or liquids.

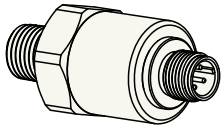

Ceramic model

- PGPS models have a stainless cell, ideal for measuring liquid pressure
- PGPC models have a ceramic cell, suitable for measuring compressed air/gas

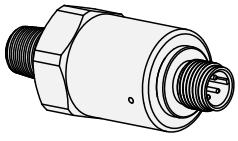

Stainless model

PGP Models

Series	Measuring Range	-	Process Connection	-	Output	-	Electrical Connector
PGPS	150PSIG	-	C	-	I	-	Q
PGPS - Stainless Steel Cell PGPC - Ceramic Cell[1]	15PSIG 50PSIG 100PSIG 150PSIG 200PSIG 3000PSIG 5000PSIG		C - 1/4" Male NPT		I - 4-20 mA; 2-wire		Q - M12 4-pin male quick disconnect connector

PGP Wiring

4-pin M12 Male QD	Pin	Description
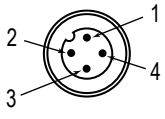	1	Supply +
	2	Output
	3	Not used/no connection
	4	Not used/no connection

Specifications

PGPC Ceramic Model Specifications

Supply Voltage
9 to 30 V DC

Output
4 to 20mA, 2-wire Loop Power

Connections
Electrical: M12x1 4-pin Male
Process: 1/4"-18 Male NPT

Ambient Temperature
–20 °C to +70 °C (–4 °F to +158 °F)

Compensated Temperature
–20 °C to +70 °C (–4 °F to +158 °F)

Storage Temperature
–20 °C to +70 °C (–4 °F to +158 °F)

Enclosure Rating
IP65

Accuracy
±1% of Full Scale

Zero/Span Tolerance
±1% of Full Scale

Long Term Stability
±1%/year

Permissible Over-pressure
1.5x Full Scale

Burst Pressure
2x Full Scale

Construction
Housing: #304SS, Copper, Aluminium
Wetted Parts: #316L Stainless Steel, Ceramic

[1] For compressed air, 150PSIG range only

© Banner Engineering Corp.

ПРОМЭЛЕКТРОНИКА/ sales@prom-elec.com

Certifications

Banner Engineering BV
Park Lane, Culliganlaan 2F bus 3
1831 Diegem, BELGIUM

Turck Banner LTD Blenheim House
Blenheim Court
Wickford, Essex SS11 8YT
GREAT BRITAIN

PGPS Stainless Steel Model Specifications

Supply Voltage
9 to 30 V DC

Output
4 to 20mA, 2-wire Loop Power

Connections
Electrical: M12x1 4-pin Male
Process: 1/4"-18 Male NPT

Ambient Temperature
–40 °C to +85 °C (–40 °F to +185 °F)

Compensated Temperature
–10 °C to +70 °C (+14 °F to +158 °F)

Storage Temperature
–45 °C to +85 °C (–49 °F to +185 °F)

Enclosure Rating
IP67

Accuracy
±0.5% of Full Scale

Zero/Span Tolerance
±0.5% of Full Scale

Long Term Stability
±0.5%/year

Permissible Over-pressure
2.5x Full Scale

Burst Pressure
4x Full Scale

Construction
Housing: #304SS, Copper, Aluminium
Wetted Parts: #316L Stainless Steel

Certifications

Banner Engineering BV
Park Lane, Culliganlaan 2F bus 3
1831 Diegem, BELGIUM

Turck Banner LTD Blenheim House
Blenheim Court
Wickford, Essex SS11 8YT
GREAT BRITAIN

PGPC Dimensions

All measurements are listed in millimeters [inches], unless noted otherwise.

Ceramic model

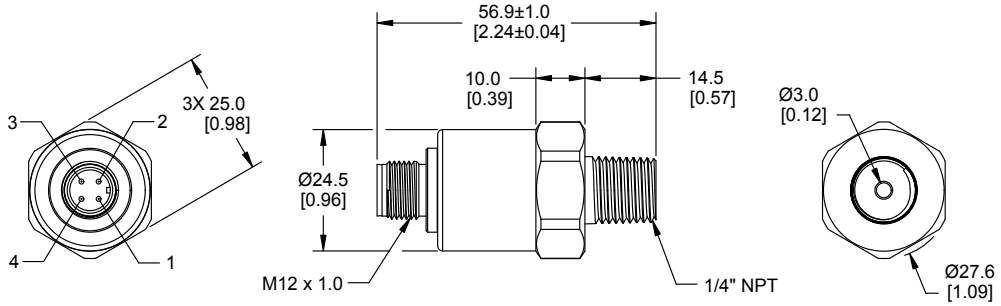

PGPS Dimensions

All measurements are listed in millimeters [inches], unless noted otherwise.

Stainless steel model

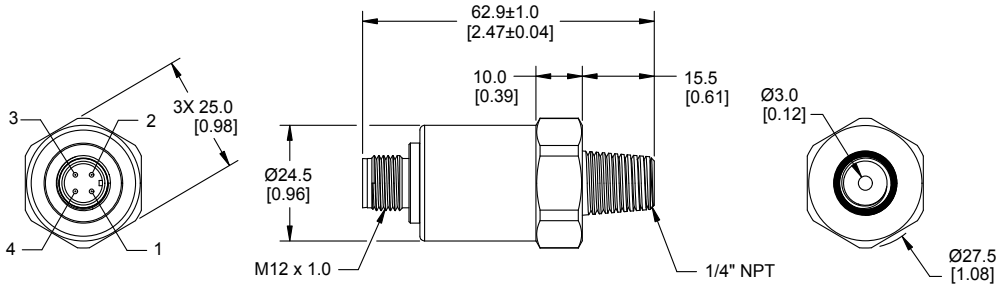

© Banner Engineering Corp. All rights reserved.

Banner Engineering Corp Limited Warranty

Banner Engineering Corp. warrants its products to be free from defects in material and workmanship for one year following the date of shipment. Banner Engineering Corp. will repair or replace, free of charge, any product of its manufacture which, at the time it is returned to the factory, is found to have been defective during the warranty period. This warranty does not cover damage or liability for misuse, abuse, or the improper application or installation of the Banner product.

THIS LIMITED WARRANTY IS EXCLUSIVE AND IN LIEU OF ALL OTHER WARRANTIES WHETHER EXPRESS OR IMPLIED (INCLUDING, WITHOUT LIMITATION, ANY WARRANTY OF MERCHANTABILITY OR FITNESS FOR A PARTICULAR PURPOSE), AND WHETHER ARISING UNDER COURSE OF PERFORMANCE, COURSE OF DEALING OR TRADE USAGE.

This Warranty is exclusive and limited to repair or, at the discretion of Banner Engineering Corp., replacement. **IN NO EVENT SHALL BANNER ENGINEERING CORP. BE LIABLE TO BUYER OR ANY OTHER PERSON OR ENTITY FOR ANY EXTRA COSTS, EXPENSES, LOSSES, LOSS OF PROFITS, OR ANY INCIDENTAL, CONSEQUENTIAL OR SPECIAL DAMAGES RESULTING FROM ANY PRODUCT DEFECT OR FROM THE USE OR INABILITY TO USE THE PRODUCT, WHETHER ARISING IN CONTRACT OR WARRANTY, STATUTE, TORT, STRICT LIABILITY, NEGLIGENCE, OR OTHERWISE.**

Banner Engineering Corp. reserves the right to change, modify or improve the design of the product without assuming any obligations or liabilities relating to any product previously manufactured by Banner Engineering Corp. Any misuse, abuse, or improper application or installation of this product or use of the product for personal protection applications when the product is identified as not intended for such purposes will void the product warranty. Any modifications to this product without prior express approval by Banner Engineering Corp will void the product warranties. All specifications published in this document are subject to change; Banner reserves the right to modify product specifications or update documentation at any time. Specifications and product information in English supersede that which is provided in any other language. For the most recent version of any documentation, refer to: www.bannerengineering.com.

For patent information, see www.bannerengineering.com/patents.

Document title: PGPS and PGPC Series Pressure Sensor
Part number: 235592
Revision: A
Original Instructions
© Banner Engineering Corp. All rights reserved.

235592

© Banner Engineering Corp. All rights reserved.