K100 Programmable Display Beacon with IO-Link Product Manual

Original Instructions
p/n: 248445 Rev. A
02-Sep-25
© Banner Engineering Corp. All rights reserved. www.bannerengineering.com

ПРОМЭЛЕКТРОНИКА/ sales@prom-elec.com

Contents

Chapter 1 Features 3
Models 3

Chapter 2 Wiring 4

Chapter 3 IO-Link Process Data Out (Master to Device) 5

Chapter 4 Specifications 11
FCC Part 15 Class B for Unintentional Radiators 12
Industry Canada ICES-003(B) 12
Dimensions 13

Chapter 5 Accessories 14
Cordsets 14
Brackets 14
Elevated Mount System 15

Chapter 6 Product Support and Maintenance 16
UTF-8 Encoding Table and Unicode Characters 16
Clean with Mild Detergent and Warm Water 20
Repairs 20
Contact Us 21
Banner Engineering Corp Limited Warranty 21

© Banner Engineering Corp. All rights reserved. www.bannerengineering.com

Chapter Contents

Models 3

Chapter 1 Features

The K100 Programmable Display Beacon with IO-Link provides diagnostics and indication for control engineers and OEMs who need to improve the interaction between operators and equipment to drive response speed and productivity improvements.



- Easily configurable, versatile display can be installed nearly anywhere, making it a simple yet powerful alternative to complex HMIs and other displays
- Great for displaying takt time, equipment status, assembly sequences, counts, and measurements where they are most useful
- IO-Link models integrate into many different systems and applications, especially Banner sensing, safety, and monitoring solutions
- Quick and easy configuration—simply define the desired text and call it via discrete control or process data
- Bright white LED display and multicolored beacon LEDs legible from 10 meters away inform operators about exactly what is going on so they can respond quickly and accurately
- IP66- and IP69K per ISO 20653-rated polycarbonate housing resists impact and condensation to provide clear communication in challenging and changing environmental conditions
- Wireless communication facilitates remote monitoring and control

Models

Model Key

Series	Style	Type	Voltage	Color	Control	Audible	Connector[1]
K100P	D	BL		RGB	K		Q
K100P = K100 Pro	D = Display	BL = Beacon Light	Blank = DC	RGB = Multicolor	K = IO-Link	Blank = No Audible A = Audible	Q = Integral 4-pin M12 male quick-disconnect connector

[1] Models with a quick-disconnect connector require a mating cordset.

© Banner Engineering Corp. All rights reserved.
www.bannerengineering.com

Chapter Contents

Chapter 2 Wiring

IO-Link Wiring

4-Pin Male M12 Pinout	Pinout Key and Wiring
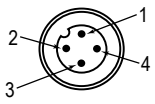	1. Brown - 12 V DC to 30 V DC 2. White - Not used 3. Blue - DC Common 4. Black - IO-Link Communication

© Banner Engineering Corp. All rights reserved.
www.bannerengineering.com

Chapter Contents

Chapter 3 IO-Link Process Data Out (Master to Device)

IO-Link® is a point-to-point communication link between a master device and a sensor and/or light. It can be used to automatically parameterize sensors or lights and to transmit process data. For the latest IO-LINK protocol and specifications, please visit www.io-link.com.

For the latest IODD files, please refer to the Banner Engineering Corp website at: www.bannerengineering.com.

Parameter Data

Use Banner's IO-Link Master to configure the Parameter Data, which can configure the device's mode, display settings, and custom configurations.

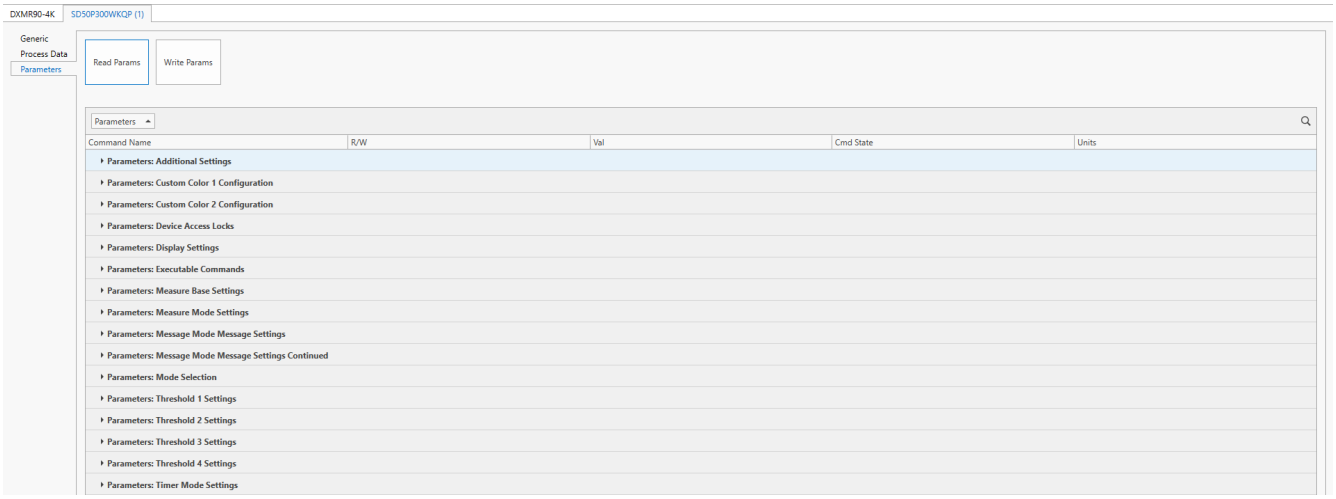

Mode

Select the mode for the device: Run Mode (default setting), Message Mode, Measure Mode, Timer Mode, or Counter Mode.

Parameters: Mode Selection		
Operating Mode Selection	rw	Timer Mode

Additional Settings

Use Additional Settings to set the Indicator Intensity, Flash Rate, Display Intensity, and Scroll Speed to custom values that are unique from the standard options.

Command Name	R/W	Val
Parameters: Additional Settings		
Additional Settings.Custom Intensity (0 - 100%)	rw	100
Additional Settings.Custom Flash Rate (0.5 - 20)	rw	1.5
Additional Settings.Custom Display Intensity (0 - 100%)	rw	100
Additional Settings.Custom Display Scroll Speed (0 - 255)	rw	15

Custom Color Configuration

Use Custom Color Configuration to control the colors of the indicator LEDs using RGB codes ranging from 0-255.

Custom 1.Red	rw	255		
Custom 1.Green	rw	255		
Custom 1.Blue	rw	255		

Device Access Locks

© Banner Engineering Corp. All rights reserved.
www.bannerengineering.com

Use Device Access Locks to lock or unlock Parameter Write Access and Data Storage Access.

Parameters: Device Access Locks		
Device Access Locks.Parameter Write Access	rw	Unlocked
Device Access Locks.Data Storage	rw	Unlocked

Display Settings

Use Display Settings to configure the color, intensity, direction, speed, scroll mode, orientation, and justification of the display text.

General Settings	Description
Display Text Color	Select either white or black display text.
Display Intensity	Define the intensity of the display text with a set of preset values or a custom value.
Display Control Direction	Select the direction the display text scrolls, using the connector as a reference.
Display Scroll Speed	Define the speed at which the display text scrolls using a set of preset values or a custom value.
Display Scroll Mode	Determine if the device scrolls the text. Auto scrolls the text for inputs longer than 16 characters.
Display Orientation	Select the orientation of the device, using the connector as a reference. The text and display rotate to match the device's orientation.
Display Justification	Select the justification of the display text between Left, Right, or Center.

Display Deadspace Enable

Select to enable a break in the text for clearer scrolling text on the display.

Display Deadspace Column Count

Select the number of deadspace columns at the end of the string.

Restore Factory Settings

Use Restore Factory Settings to clear the current configurations and reset the device to its initial settings.

Measure Base Settings

Use Measure Base Settings to configure the overall settings of the display device in Measure Mode.

Parameters: Measure Base Settings		
Measure Base Configuration.Display Override	rw	Disabled
Measure Base Configuration.Override string	rw	Base
Measure Base Configuration.Animation	rw	Off
Measure Base Configuration.Color 1	rw	Green
Measure Base Configuration.Color 1 Intensity	rw	High
Measure Base Configuration.Speed	rw	Standard
Measure Base Configuration.Pulse Pattern	rw	Normal
Measure Base Configuration.Color 2	rw	Green
Measure Base Configuration.Color 2 Intensity	rw	High
Measure Base Configuration.Audible Volume	rw	Off
Measure Base Configuration.Audible Type	rw	Continuous 1

General Settings	Description
Display Override	Determine if the device displays a string of text rather than the output values.
Override String	Determine the text that displays if Display Override is enabled.
Animation	Select the animation of the indicator LEDs from the animation table.
Color 1	Select the color of the first row of indicator LEDs.
Color 1 Intensity	Define the intensity of the first row of indicator LEDs.
Configuration Speed	Define the speed of the animation.
Pulse Pattern	Select the pulse pattern of the indicator LEDs: Normal, Strobe, Three Pulse, SOS, or Random.
Color 2	Select the color of the first row of indicator LEDs.
Color 2 Intensity	Define the intensity of the first row of indicator LEDs.

Configuration Audible Volume

Select the volume of the audible on the device.

© Banner Engineering Corp. All rights reserved.
www.bannerengineering.com

Measure Mode Settings

Use the Process Data to display the measurement values. Options include either the raw input values or the scaled values.

Parameters: Measure Mode Settings		
Measure General Configuration.Filtering	rw	Off
Measure General Configuration.Hysteresis	rw	Off
Measure General Configuration.Measure/Timer/Counter Mode Data Label	rw	
Measure General Configuration.Measure/Timer/Counter Mode Value	rw	Enabled
Measure General Configuration.Measure/Timer/Counter Mode Bar Graph	rw	Enabled
Measure General Configuration.Output Scale Value Low	rw	0
Measure General Configuration.Output Scale Value High	rw	10
Measure General Configuration.Input Scale Value Low	rw	0
Measure General Configuration.Input Scale Value High	rw	65535
Measure General Configuration.Measure/Timer/Counter Mode Value Label	rw	
Measure General Configuration.Measure/Timer/Counter Mode Display Orientation	rw	0
Measure General Configuration.Measure/Timer/Counter Mode Display Minimal Bar Graph	rw	Disabled
Measure General Configuration.Measure/Timer/Counter Mode Decimal Places	rw	1
Measure General Configuration.Measure/Timer/Counter Mode Display as Time	rw	Disabled

General Settings	Description
Filtering	The level of filtering used to minimize the effects of noise on the output.
Hysteresis	The level of lag between the measurement thresholds to minimize the flickering at switch points.
Measure/Timer/Counter Mode Data Label	Text that displays before the Measure/Timer/Counter value. This setting carries through all three modes.
Measure/Timer/Counter Mode Bar Graph	Display the bar graph across the full display. This setting carries through all three modes.
Output Scale Value Low	The low-end value of the output translated from the input frequency.
Output Scale Value High	The high-end value of the output translated from the input frequency.
Input Scale Value Low	The lowest frequency of the input range.
Input Scale Value High	The highest frequency of the input range.
Measure/Timer/Counter Mode Value Label	Text that displays after the Measure/Timer/Count value to indicate the units displayed. This can be up to three characters. This setting carries through all three modes.
Measure General Configuration.Measure/Timer/Counter Mode Display Orientation	Determine the orientation of the bar graph, using the connector as a reference.
Measure General Configuration.Measure/Timer/Counter Mode Display Minimal Bar Graph	Display the bar graph as a single line of LEDs.
Measure General Configuration.Measure/Timer/Counter Mode Decimal Places	Determine the number of decimal places displayed on the Count Value.
Measure General Configuration.Measure/Timer/Counter Mode Display as Time	Display the time in HH:MM:SS format without data labels.

Message Mode

Use Message Mode to create and save thirteen display messages.

Parameters: Message Mode Message Settings		
Message Mode Settings.Message 1	rw	Reset
Message Mode Settings.Message 2	rw	Fault
Message Mode Settings.Message 3	rw	Stop
Message Mode Settings.Message 4	rw	Start
Message Mode Settings.Message 5	rw	Chageover
Message Mode Settings.Message 6	rw	Open
Parameters: Message Mode Message Settings Continued		
Message Mode Settings Continued.Message 7	rw	Welcome
Message Mode Settings Continued.Message 8	rw	Quality
Message Mode Settings Continued.Message 9	rw	Warning
Message Mode Settings Continued.Message 10	rw	Alarm
Message Mode Settings Continued.Message 11	rw	Break
Message Mode Settings Continued.Message 12	rw	Run
Message Mode Settings Continued.Message 13	rw	Maintenance

Threshold Settings

Use Threshold Settings to configure the thresholds using in Measure Mode, Timer Mode, and Counter Mode. Four of these thresholds can be set individually.

© Banner Engineering Corp. All rights reserved.
www.bannerengineering.com

Parameters: Threshold 1 Settings		
Measure Threshold 1 Configuration.Threshold Enable	rw	Enabled
Measure Threshold 1 Configuration.Threshold Value	rw	25
Measure Threshold 1 Configuration.Threshold Comparison	rw	Less Than
Measure Threshold 1 Configuration.Threshold Override	rw	Disabled
Measure Threshold 1 Configuration.Display Override	rw	Disabled
Measure Threshold 1 Configuration.Override string	rw	Thresh 1
Measure Threshold 1 Configuration.Animation	rw	Steady
Measure Threshold 1 Configuration.Color 1	rw	Green
Measure Threshold 1 Configuration.Color 1 Intensity	rw	High
Measure Threshold 1 Configuration.Speed	rw	Standard
Measure Threshold 1 Configuration.Pulse Pattern	rw	Normal
Measure Threshold 1 Configuration.Color 2	rw	Green
Measure Threshold 1 Configuration.Color 2 Intensity	rw	High
Measure Threshold 1 Configuration.Audible Volume	rw	Off
Measure Threshold 1 Configuration.Audible Type	rw	Continuous 1

General Settings	Description
Threshold Enable	Determine if thresholds will be used to change the output at various levels.
Threshold Value	Define the percentage of the overall value that sets the threshold based on the threshold number used.
Threshold Comparison	Determine if this threshold is in use for values greater than or less than the Threshold Value.
Threshold Override	Determine the precedence of the thresholds that have overlapping criteria.

General Settings	Description
Display Override	Determine if the device displays a string of text rather than the output values.
Override String	Determine the text that displays if Display Override is enabled.
Animation	Select the animation of the indicator LEDs from the animation table.
Color	Select the color of the indicator LEDs.
Color Intensity	Define the intensity of the indicator LEDs.
Configuration Speed	Define the speed of the animation.
Pulse Pattern	Select the pulse pattern of the indicator LEDs: Normal, Strobe, Three Pulse, SOS, or Random.

Timer Mode

Use Timer Mode to count up to or down from a determined value. For additional timer settings, refer to the table in Measure Mode Settings.

Parameters: Timer Mode Settings		
Timer Mode Settings.Timer Value	rw	15
Timer Mode Settings.Timer Unit Type	rw	Seconds
Timer Mode Settings.Timer Count Type	rw	Up
Timer Mode Settings.Enable Auto Reload	rw	Enabled

General Settings	Description
Timer Value	The total time of the timer.
Timer Unit Type	Select the units of the timer.
Timer Count Type	Up: Counts up from zero to Count Seconds. Down: Counts down from Count Seconds to zero.
Enable Auto Reload	The timer loops back to the original value automatically when it reaches its final value.

Counter Mode

Counter Mode uses parameter settings found in Measure Mode Settings to configure the output of the device. For more detail, refer to the table in Measure Mode Settings.

Demo Mode

Demo sequence cycles through twelve different configurations to highlight example applications.

Process Data

© Banner Engineering Corp. All rights reserved.
www.bannerengineering.com

Process Data is used to implement the data to run the device. With Process Data, the selection menu changes based on the Mode Selection written to the device.

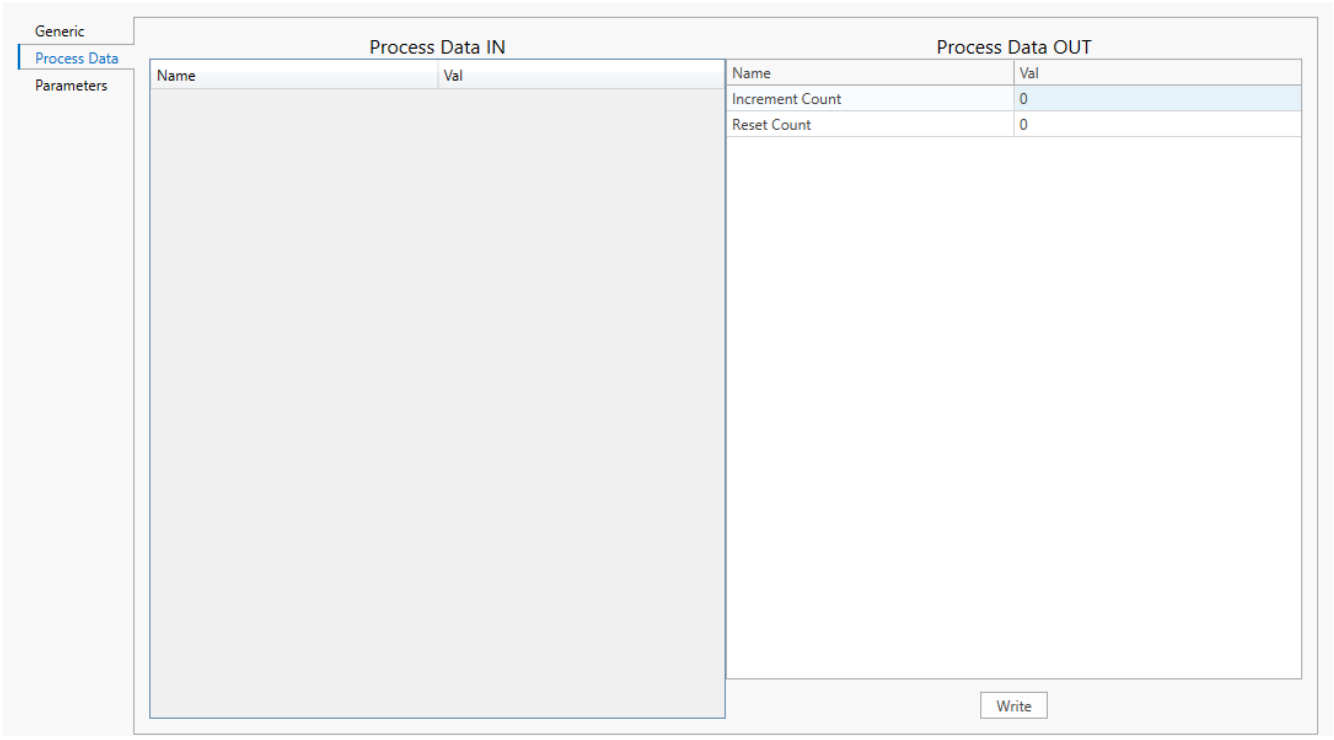

Run Mode

Process Data OUT

Name	Val
Display Text	Banner Engineering!
Color 2	Green
Color 2 Intensity	High
Color 1 Intensity	Medium
Pulse Pattern	Normal
Audible Volume	Off
Color 1	Orange
Audible Type	Pulse
Speed	Slow
Animation	Steady

Message Mode

Process Data OUT

Name	Val
Audible Type	26
Message Selection 1	4
Message Selection 2	5
Color 2 Intensity	6
Color 2	Blue
Speed	Fast
Animation	Off
Color 1 Intensity	Off
Audible Volume	Off
Color 1	Orange
Pulse Pattern	SOS

Measure Mode

Process Data OUT

Name	Val
Measure Mode Value	16384

© Banner Engineering Corp. All rights reserved.
www.bannerengineering.com

Timer Mode

Process Data OUT	
Name	Val
Run Timer	1
Reset Timer	0

Counter Mode

Process Data OUT	
Name	Val
Increment Count	1
Reset Count	0

Indicator LED Animations

Animation	Description
Off	Indication LEDs are off.
Steady	Color 1 is solid on at a defined intensity.
Flash	Color 1 flashes alternately at defined speed, color intensities, and pattern (Normal, Strobe, Three Pulse, SOS, or Random).
Two Color Flash	Color 1 and Color 2 flash alternately at defined speed, color intensities, and pattern (Normal, Strobe, Three Pulse, SOS, or Random).
50/50	Color 1 and Color 2 are solid at a defined intensity.
50/50 Flash	Color 1 and Color 2 flash at a defined speed, color intensity, and pattern (Normal, Strobe, Three Pulse, SOS, or Random).
Intensity Sweep	Color 1 repeatedly increases and decreases intensity between 0% to 100% at defined speed and color intensity.
Two Color Sweep	Color 1 and Color 2 define the end values of a line across the color gamut. The light continuously displays a color by moving along the line at the defined speed and color intensities.

© Banner Engineering Corp. All rights reserved.
www.bannerengineering.com

Chapter Contents

FCC Part 15 Class B for Unintentional Radiators 12
Industry Canada ICES-003(B)..... 12
Dimensions..... 13

Chapter 4 Specifications

Supply Voltage

18 V DC to 30 V DC

Use only with a suitable Class 2 power supply (UL) or SELV power supply (CE)

Supply Current

350 mA max. at 18 V DC

270 mA max. at 24 V DC

220 mA max. at 30 V DC

Supply Protection Circuitry

Protected against reverse polarity and transient voltages

Leakage Current Immunity

400 µA

Indicator Response Time

On response: 325 ms (max)

Off response: 20 ms (max)

Connections

Integral 4-pin M12 male quick-disconnect connector

Models with a quick-disconnect connector require a mating cordset

Do not spray cable with high-pressure sprayer or cable damage will result

Operating Temperature

–40 °C to +50 °C (–40 °F to +122 °F)

Storage Temperature

–40 °C to +70 °C (–40 °F to +158 °F)

Environmental Rating

Rated IP66 and IP69K per ISO 20653

UL Type 4X

Vibration and Mechanical Shock

Meets IEC 60068-2-6 requirements (Vibration: 10 Hz to 55 Hz, 1.0 mm amplitude, 5 minutes sweep, 30 minutes dwell)

Meets IEC 60068-2-27 requirements (Shock: 15G 11 ms duration, half sine wave)

Impact: IK10 (60068-2-75)

Audible Characteristics

Sound Intensity at 2.5 KHz, at 1 m (typical):

Low volume setting: 93 dB
Medium volume setting: 96 dB
High volume setting: 101 dB

Character Limit

Run Mode: 29 characters

All other modes: 32 characters

Construction

Black polycarbonate housing

Smoky polycarbonate dome

Certifications

Banner Engineering BV
Park Lane, Culliganlaan 2F bus 3
1831 Diegem, BELGIUM

Required Overcurrent Protection

WARNING: Electrical connections must be made by qualified personnel in accordance with local and national electrical codes and regulations.

Overcurrent protection is required to be provided by end product application per the supplied table.

Overcurrent protection may be provided with external fusing or via Current Limiting, Class 2 Power Supply.

Supply wiring leads < 24 AWG shall not be spliced.

For additional product support, go to www.bannerengineering.com.

Supply Wiring (AWG)	Required Overcurrent Protection (A)	Supply Wiring (AWG)	Required Overcurrent Protection (A)
20	5.0	26	1.0
22	3.0	28	0.8
24	2.0	30	0.5

Mounting

M36 x 2 threaded base, maximum torque 5 N·m (44 inch-lbf)

Interior 3/4-14 NPT thread

Mounting nut included

© Banner Engineering Corp. All rights reserved.
www.bannerengineering.com

Indicator Characteristics

Color	Dominant Wavelength (nm) or Color Temperature (CCT)	Color Coordinates[2]		Lumen Output (Typical at 25 °C)
		x	y	
Green	523	0.159	0.6987	30.4
Red	620	0.6895	0.3087	14.6
Orange	599	0.5992	0.3752	17.7
Amber	588	0.535	0.4223	19.8
Yellow	575	0.4518	0.4834	22.4
Lime Green	560	0.3655	0.5471	25
Spring Green	506	0.1572	0.5171	26.6
Cyan	491	0.1565	0.3201	21.3
Sky Blue	484	0.1443	0.2271	16.8
Blue	467	0.1371	0.0555	5.4
Violet	415	0.2141	0.0904	7.9
Magenta	-	0.3661	0.1644	11.4
Rose	-	0.4976	0.2201	12.9
White	5500K	0.3309	0.3385	41.7

FCC Part 15 Class B for Unintentional Radiators

(Part 15.105(b)) This equipment has been tested and found to comply with the limits for a Class B digital device, pursuant to part 15 of the FCC Rules. These limits are designed to provide reasonable protection against harmful interference in a residential installation. This equipment generates, uses, and can radiate radio frequency energy and, if not installed and used in accordance with the instructions, may cause harmful interference to radio communications. However, there is no guarantee that interference will not occur in a particular installation. If this equipment does cause harmful interference to radio or television reception, which can be determined by turning the equipment off and on, the user is encouraged to try to correct the interference by one or more of the following measures:

- Reorient or relocate the receiving antenna.
- Increase the separation between the equipment and receiver.
- Connect the equipment into an outlet on a circuit different from that to which the receiver is connected.
- Consult the dealer or an experienced radio/TV technician for help.

(Part 15.21) Any changes or modifications not expressly approved by the party responsible for compliance could void the user’s authority to operate this equipment.

Industry Canada ICES-003(B)

This device complies with CAN ICES-3 (B)/NMB-3(B). Operation is subject to the following two conditions: 1) This device may not cause harmful interference; and 2) This device must accept any interference received, including interference that may cause undesired operation.

Cet appareil est conforme à la norme NMB-3(B). Le fonctionnement est soumis aux deux conditions suivantes : (1) ce dispositif ne peut pas occasionner d'interférences, et (2) il doit tolérer toute interférence, y compris celles susceptibles de provoquer un fonctionnement non souhaité du dispositif.

[2] Refer to CIE 1931 chromaticity diagram or color chart, to show equivalent color with indicated color coordinates. Actual coordinates may differ by 10%.

© Banner Engineering Corp. All rights reserved.

Dimensions

All measurements are listed in millimeters [inches], unless noted otherwise. The measurements provided are subject to change.

Standard Models	Audible Models
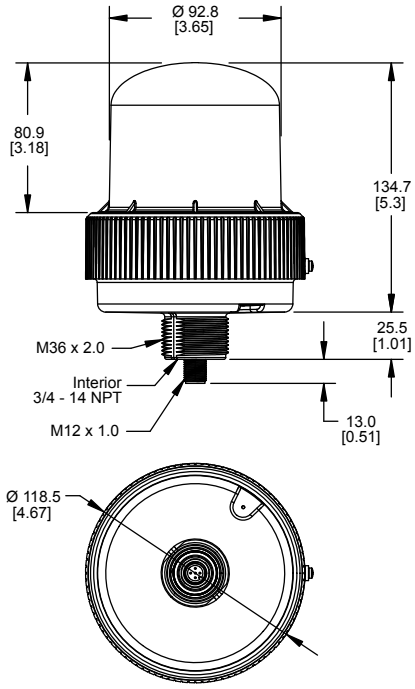	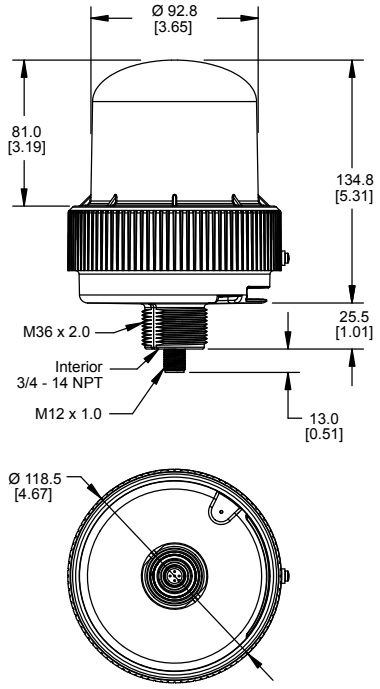

© Banner Engineering Corp. All rights reserved.
www.bannerengineering.com

Chapter Contents

Cordsets 14
Brackets 14
Elevated Mount System 15

Chapter 5 Accessories

Cordsets

4-pin A-Code Double-Ended M12 Female to M12 Male Cordsets				
Model	**Length**	**Dimensions (mm)**	**Pinouts**	
BC-M12F4-M12M4-22-1	1 m (3.28 ft)	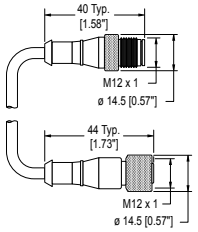	Female 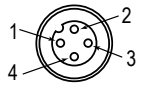 Male 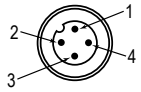	1 = Brown 2 = White 3 = Blue 4 = Black
BC-M12F4-M12M4-22-2	2 m (6.56 ft)			
BC-M12F4-M12M4-22-3	3 m (9.84 ft)			
BC-M12F4-M12M4-22-4	4 m (13.12 ft)			
BC-M12F4-M12M4-22-5	5 m (16.4 ft)			
BC-M12F4-M12M4-22-10	10 m (30.81 ft)			
BC-M12F4-M12M4-22-15	15 m (49.2 ft)			

Brackets

LMB36RA

- Indicator light right-angle mounting
- 36 mm mounting hole
- Stainless steel

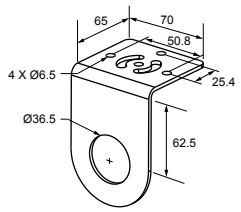

© Banner Engineering Corp. All rights reserved.
www.bannerengineering.com

Elevated Mount System

Elevated Mount System (1/2" Pipes)

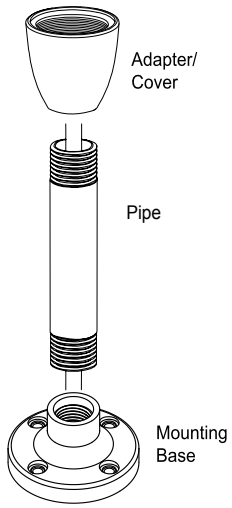

Adapter/Cover Model	Description
SA-M36E12	• Adapter from M36 thread to ½-14 NPSM thread • Streamlined black plastic mounting base adapter/cover • Drilled hole

Black Anodized Aluminum, ½ in. NPT Pipe Models	Clear Anodized Aluminum, ½ in. NPT Pipe Models	Description
SOP-E12-150A, 150 mm (6 in) long	**SOP-E12-150AC**, 150 mm (6 in) long	• Elevated-use stand-off pipe • Threaded at both ends • Compatible with most industrial environments
SOP-E12-300A, 300 mm (12 in) long	**SOP-E12-300AC**, 300 mm (12 in) long	
SOP-E12-600A, 600 mm (24 in) long	-	
SOP-E12-900A, 900 mm (36 in) long	**SOP-E12-900AC**, 900 mm (36 in) long	

Mounting Base Model	Description
SA-F12	• Elevated-use stand-off pipes (½ in, NPSM/DN15) • M5 mounting hardware and nitrile gasket included • Die-cast zinc base with black paint

Elevated Mount System (3/4" Pipes)

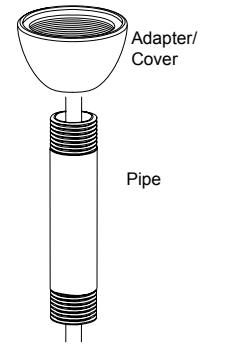

Adapter/Cover Model	Description
SA-M36SOP	• M36 thread adapter with clearance for ¾ pipe mount • Streamlined black plastic mounting base adapter/cover • Drilled hole

Black Anodized Aluminum, ¾ in. NPT Pipe Models	Description
SOP-E34-150A, 150 mm (6 in) long	• Elevated-use stand-off pipe • Threaded at both ends • Compatible with most industrial environments
SOP-E34-300A, 300 mm (12 in) long	
SOP-E34-600A, 600 mm (24 in) long	
SOP-E34-900A, 900 mm (36 in) long	

© Banner Engineering Corp. All rights reserved.
www.bannerengineering.com

Chapter Contents

UTF-8 Encoding Table and Unicode Characters 16
Clean with Mild Detergent and Warm Water 20
Repairs 20
Contact Us 21
Banner Engineering Corp Limited Warranty 21

Chapter 6 Product Support and Maintenance

UTF-8 Encoding Table and Unicode Characters

Unicode Code Point	Character	UTF-8 (hex.)	Name
U+0020		20	SPACE
U+0021	!	21	EXCLAMATION MARK
U+0022	"	22	QUOTATION MARK
U+0023	#	23	NUMBER SIGN
U+0024	$	24	DOLLAR SIGN
U+0025	%	25	PERCENT SIGN
U+0026	&	26	AMPERSAND
U+0027	'	27	APOSTROPHE
U+0028	(	28	LEFT PARENTHESIS
U+0029	)	29	RIGHT PARENTHESIS
U+002A	*	2a	ASTERISK
U+002B	+	2b	PLUS SIGN
U+002C	,	2c	COMMA
U+002D	-	2d	HYPHEN-MINUS
U+002E	.	2e	FULL STOP
U+002F	/	2f	SOLIDUS
U+0030	0	30	DIGIT ZERO
U+0031	1	31	DIGIT ONE
U+0032	2	32	DIGIT TWO
U+0033	3	33	DIGIT THREE
U+0034	4	34	DIGIT FOUR
U+0035	5	35	DIGIT FIVE
U+0036	6	36	DIGIT SIX
U+0037	7	37	DIGIT SEVEN
U+0038	8	38	DIGIT EIGHT
U+0039	9	39	DIGIT NINE
U+003A	:	3a	COLON
U+003B	;	3b	SEMICOLON
U+003C	<	3c	LESS-THAN SIGN
U+003D	=	3d	EQUALS SIGN
U+003E	>	3e	GREATER-THAN SIGN

Continued on page 17

© Banner Engineering Corp. All rights reserved.
www.bannerengineering.com

Continued from page 16

Unicode Code Point	Character	UTF-8 (hex.)	Name
U+003F	?	3f	QUESTION MARK
U+0040	@	40	COMMERCIAL AT
U+0041	A	41	LATIN CAPITAL LETTER A
U+0042	B	42	LATIN CAPITAL LETTER B
U+0043	C	43	LATIN CAPITAL LETTER C
U+0044	D	44	LATIN CAPITAL LETTER D
U+0045	E	45	LATIN CAPITAL LETTER E
U+0046	F	46	LATIN CAPITAL LETTER F
U+0047	G	47	LATIN CAPITAL LETTER G
U+0048	H	48	LATIN CAPITAL LETTER H
U+0049	I	49	LATIN CAPITAL LETTER I
U+004A	J	4a	LATIN CAPITAL LETTER J
U+004B	K	4b	LATIN CAPITAL LETTER K
U+004C	L	4c	LATIN CAPITAL LETTER L
U+004D	M	4d	LATIN CAPITAL LETTER M
U+004E	N	4e	LATIN CAPITAL LETTER N
U+004F	O	4f	LATIN CAPITAL LETTER O
U+0050	P	50	LATIN CAPITAL LETTER P
U+0051	Q	51	LATIN CAPITAL LETTER Q
U+0052	R	52	LATIN CAPITAL LETTER R
U+0053	S	53	LATIN CAPITAL LETTER S
U+0054	T	54	LATIN CAPITAL LETTER T
U+0055	U	55	LATIN CAPITAL LETTER U
U+0056	V	56	LATIN CAPITAL LETTER V
U+0057	W	57	LATIN CAPITAL LETTER W
U+0058	X	58	LATIN CAPITAL LETTER X
U+0059	Y	59	LATIN CAPITAL LETTER Y
U+005A	Z	5a	LATIN CAPITAL LETTER Z
U+005B	[	5b	LEFT SQUARE BRACKET
U+005C	\	5c	REVERSE SOLIDUS
U+005D	]	5d	RIGHT SQUARE BRACKET
U+005E	^	5e	CIRCUMFLEX ACCENT
U+005F	_	5f	LOW LINE
U+0060	`	60	GRAVE ACCENT
U+0061	a	61	LATIN SMALL LETTER A
U+0062	b	62	LATIN SMALL LETTER B
U+0063	c	63	LATIN SMALL LETTER C
U+0064	d	64	LATIN SMALL LETTER D
U+0065	e	65	LATIN SMALL LETTER E
U+0066	f	66	LATIN SMALL LETTER F
U+0067	g	67	LATIN SMALL LETTER G
U+0068	h	68	LATIN SMALL LETTER H

Continued on page 18

© Banner Engineering Corp. All rights reserved.
www.bannerengineering.com

Continued from page 17

Unicode Code Point	Character	UTF-8 (hex.)	Name
U+0069	i	69	LATIN SMALL LETTER I
U+006A	j	6a	LATIN SMALL LETTER J
U+006B	k	6b	LATIN SMALL LETTER K
U+006C	l	6c	LATIN SMALL LETTER L
U+006D	m	6d	LATIN SMALL LETTER M
U+006E	n	6e	LATIN SMALL LETTER N
U+006F	o	6f	LATIN SMALL LETTER O
U+0070	p	70	LATIN SMALL LETTER P
U+0071	q	71	LATIN SMALL LETTER Q
U+0072	r	72	LATIN SMALL LETTER R
U+0073	s	73	LATIN SMALL LETTER S
U+0074	t	74	LATIN SMALL LETTER T
U+0075	u	75	LATIN SMALL LETTER U
U+0076	v	76	LATIN SMALL LETTER V
U+0077	w	77	LATIN SMALL LETTER W
U+0078	x	78	LATIN SMALL LETTER X
U+0079	y	79	LATIN SMALL LETTER Y
U+007A	z	7a	LATIN SMALL LETTER Z
U+007B	{	7b	LEFT CURLY BRACKET
U+007C	|	7c	VERTICAL LINE
U+007D	}	7d	RIGHT CURLY BRACKET
U+007E	~	7e	TILDE
U+00A0		c2 a0	NO-BREAK SPACE
U+00A1	¡	c2 a1	INVERTED EXCLAMATION MARK
U+00A2	¢	c2 a2	CENT SIGN
U+00A3	£	c2 a3	POUND SIGN
U+00A4	¤	c2 a4	CURRENCY SIGN
U+00A5	¥	c2 a5	YEN SIGN
U+00A6	¦	c2 a6	BROKEN BAR
U+00A7	§	c2 a7	SECTION SIGN
U+00A8	¨	c2 a8	DIAERESIS
U+00A9	©	c2 a9	COPYRIGHT SIGN
U+00AA	ª	c2 aa	FEMININE ORDINAL INDICATOR
U+00AB	«	c2 ab	LEFT-POINTING DOUBLE ANGLE QUOTATION MARK
U+00AC	¬	c2 ac	NOT SIGN
U+00AD		c2 ad	SOFT HYPHEN
U+00AE	®	c2 ae	REGISTERED SIGN
U+00AF	¯	c2 af	MACRON
U+00B0	°	c2 b0	DEGREE SIGN
U+00B1	±	c2 b1	PLUS-MINUS SIGN
U+00B2	²	c2 b2	SUPERSCRIPT TWO
U+00B3	³	c2 b3	SUPERSCRIPT THREE

Continued on page 19

© Banner Engineering Corp. All rights reserved.

Continued from page 18

Unicode Code Point	Character	UTF-8 (hex.)	Name
U+00B4	´	c2 b4	ACUTE ACCENT
U+00B5	µ	c2 b5	MICRO SIGN
U+00B6	¶	c2 b6	PILCROW SIGN
U+00B7	·	c2 b7	MIDDLE DOT
U+00B8	¸	c2 b8	CEDILLA
U+00B9	¹	c2 b9	SUPERSCRIPT ONE
U+00BA	º	c2 ba	MASCULINE ORDINAL INDICATOR
U+00BB	»	c2 bb	RIGHT-POINTING DOUBLE ANGLE QUOTATION MARK
U+00BC	¼	c2 bc	VULGAR FRACTION ONE QUARTER
U+00BD	½	c2 bd	VULGAR FRACTION ONE HALF
U+00BE	¾	c2 be	VULGAR FRACTION THREE QUARTERS
U+00BF	¿	c2 bf	INVERTED QUESTION MARK
U+00C0	À	c3 80	LATIN CAPITAL LETTER A WITH GRAVE
U+00C1	Á	c3 81	LATIN CAPITAL LETTER A WITH ACUTE
U+00C2	Â	c3 82	LATIN CAPITAL LETTER A WITH CIRCUMFLEX
U+00C3	Ã	c3 83	LATIN CAPITAL LETTER A WITH TILDE
U+00C4	Ä	c3 84	LATIN CAPITAL LETTER A WITH DIAERESIS
U+00C5	Å	c3 85	LATIN CAPITAL LETTER A WITH RING ABOVE
U+00C6	Æ	c3 86	LATIN CAPITAL LETTER AE
U+00C7	Ç	c3 87	LATIN CAPITAL LETTER C WITH CEDILLA
U+00C8	È	c3 88	LATIN CAPITAL LETTER E WITH GRAVE
U+00C9	É	c3 89	LATIN CAPITAL LETTER E WITH ACUTE
U+00CA	Ê	c3 8a	LATIN CAPITAL LETTER E WITH CIRCUMFLEX
U+00CB	Ë	c3 8b	LATIN CAPITAL LETTER E WITH DIAERESIS
U+00CC	Ì	c3 8c	LATIN CAPITAL LETTER I WITH GRAVE
U+00CD	Í	c3 8d	LATIN CAPITAL LETTER I WITH ACUTE
U+00CE	Î	c3 8e	LATIN CAPITAL LETTER I WITH CIRCUMFLEX
U+00CF	Ï	c3 8f	LATIN CAPITAL LETTER I WITH DIAERESIS
U+00D0	Ð	c3 90	LATIN CAPITAL LETTER ETH
U+00D1	Ñ	c3 91	LATIN CAPITAL LETTER N WITH TILDE
U+00D2	Ò	c3 92	LATIN CAPITAL LETTER O WITH GRAVE
U+00D3	Ó	c3 93	LATIN CAPITAL LETTER O WITH ACUTE
U+00D4	Ô	c3 94	LATIN CAPITAL LETTER O WITH CIRCUMFLEX
U+00D5	Õ	c3 95	LATIN CAPITAL LETTER O WITH TILDE
U+00D6	Ö	c3 96	LATIN CAPITAL LETTER O WITH DIAERESIS
U+00D7	×	c3 97	MULTIPLICATION SIGN
U+00D8	Ø	c3 98	LATIN CAPITAL LETTER O WITH STROKE
U+00D9	Ù	c3 99	LATIN CAPITAL LETTER U WITH GRAVE
U+00DA	Ú	c3 9a	LATIN CAPITAL LETTER U WITH ACUTE
U+00DB	Û	c3 9b	LATIN CAPITAL LETTER U WITH CIRCUMFLEX
U+00DC	Ü	c3 9c	LATIN CAPITAL LETTER U WITH DIAERESIS
U+00DD	Ý	c3 9d	LATIN CAPITAL LETTER Y WITH ACUTE

Continued on page 20

© Banner Engineering Corp. All rights reserved.
www.bannerengineering.com

Continued from page 19

Unicode Code Point	Character	UTF-8 (hex.)	Name
U+00DE	Þ	c3 9e	LATIN CAPITAL LETTER THORN
U+00DF	ß	c3 9f	LATIN SMALL LETTER SHARP S
U+00E0	à	c3 a0	LATIN SMALL LETTER A WITH GRAVE
U+00E1	á	c3 a1	LATIN SMALL LETTER A WITH ACUTE
U+00E2	â	c3 a2	LATIN SMALL LETTER A WITH CIRCUMFLEX
U+00E3	ã	c3 a3	LATIN SMALL LETTER A WITH TILDE
U+00E4	ä	c3 a4	LATIN SMALL LETTER A WITH DIAERESIS
U+00E5	å	c3 a5	LATIN SMALL LETTER A WITH RING ABOVE
U+00E6	æ	c3 a6	LATIN SMALL LETTER AE
U+00E7	ç	c3 a7	LATIN SMALL LETTER C WITH CEDILLA
U+00E8	è	c3 a8	LATIN SMALL LETTER E WITH GRAVE
U+00E9	é	c3 a9	LATIN SMALL LETTER E WITH ACUTE
U+00EA	ê	c3 aa	LATIN SMALL LETTER E WITH CIRCUMFLEX
U+00EB	ë	c3 ab	LATIN SMALL LETTER E WITH DIAERESIS
U+00EC	ì	c3 ac	LATIN SMALL LETTER I WITH GRAVE
U+00ED	í	c3 ad	LATIN SMALL LETTER I WITH ACUTE
U+00EE	î	c3 ae	LATIN SMALL LETTER I WITH CIRCUMFLEX
U+00EF	ï	c3 af	LATIN SMALL LETTER I WITH DIAERESIS
U+00F0	ð	c3 b0	LATIN SMALL LETTER ETH
U+00F1	ñ	c3 b1	LATIN SMALL LETTER N WITH TILDE
U+00F2	ò	c3 b2	LATIN SMALL LETTER O WITH GRAVE
U+00F3	ó	c3 b3	LATIN SMALL LETTER O WITH ACUTE
U+00F4	ô	c3 b4	LATIN SMALL LETTER O WITH CIRCUMFLEX
U+00F5	õ	c3 b5	LATIN SMALL LETTER O WITH TILDE
U+00F6	ö	c3 b6	LATIN SMALL LETTER O WITH DIAERESIS
U+00F7	÷	c3 b7	DIVISION SIGN
U+00F8	ø	c3 b8	LATIN SMALL LETTER O WITH STROKE
U+00F9	ù	c3 b9	LATIN SMALL LETTER U WITH GRAVE
U+00FA	ú	c3 ba	LATIN SMALL LETTER U WITH ACUTE
U+00FB	û	c3 bb	LATIN SMALL LETTER U WITH CIRCUMFLEX
U+00FC	ü	c3 bc	LATIN SMALL LETTER U WITH DIAERESIS
U+00FD	ý	c3 bd	LATIN SMALL LETTER Y WITH ACUTE
U+00FE	þ	c3 be	LATIN SMALL LETTER THORN
U+00FF	ÿ	c3 bf	LATIN SMALL LETTER Y WITH DIAERESIS

Clean with Mild Detergent and Warm Water

Wipe down the device with a soft cloth dampened with a mild detergent and warm water solution. Do not use any other chemicals for cleaning.

Repairs

Contact Banner Engineering for troubleshooting of this device. **Do not attempt any repairs to this Banner device; it contains no field-replaceable parts or components.** If the device, device part, or device component is determined to be defective by a Banner Applications Engineer, they will advise you of Banner's RMA (Return Merchandise Authorization) procedure.

© Banner Engineering Corp. All rights reserved.

IMPORTANT: If instructed to return the device, pack it with care. Damage that occurs in return shipping is not covered by warranty.

Contact Us

Banner Engineering Corp. | 9714 Tenth Avenue North | Plymouth, MN 55441, USA | Phone: + 1 888 373 6767

For worldwide locations and local representatives, visit www.bannerengineering.com.

Banner Engineering Corp Limited Warranty

Banner Engineering Corp. warrants its products to be free from defects in material and workmanship for one year following the date of shipment. Banner Engineering Corp. will repair or replace, free of charge, any product of its manufacture which, at the time it is returned to the factory, is found to have been defective during the warranty period. This warranty does not cover damage or liability for misuse, abuse, or the improper application or installation of the Banner product.

THIS LIMITED WARRANTY IS EXCLUSIVE AND IN LIEU OF ALL OTHER WARRANTIES WHETHER EXPRESS OR IMPLIED (INCLUDING, WITHOUT LIMITATION, ANY WARRANTY OF MERCHANTABILITY OR FITNESS FOR A PARTICULAR PURPOSE), AND WHETHER ARISING UNDER COURSE OF PERFORMANCE, COURSE OF DEALING OR TRADE USAGE.

This Warranty is exclusive and limited to repair or, at the discretion of Banner Engineering Corp., replacement. **IN NO EVENT SHALL BANNER ENGINEERING CORP. BE LIABLE TO BUYER OR ANY OTHER PERSON OR ENTITY FOR ANY EXTRA COSTS, EXPENSES, LOSSES, LOSS OF PROFITS, OR ANY INCIDENTAL, CONSEQUENTIAL OR SPECIAL DAMAGES RESULTING FROM ANY PRODUCT DEFECT OR FROM THE USE OR INABILITY TO USE THE PRODUCT, WHETHER ARISING IN CONTRACT OR WARRANTY, STATUTE, TORT, STRICT LIABILITY, NEGLIGENCE, OR OTHERWISE.**

Banner Engineering Corp. reserves the right to change, modify or improve the design of the product without assuming any obligations or liabilities relating to any product previously manufactured by Banner Engineering Corp. Any misuse, abuse, or improper application or installation of this product or use of the product for personal protection applications when the product is identified as not intended for such purposes will void the product warranty. Any modifications to this product without prior express approval by Banner Engineering Corp will void the product warranties. All specifications published in this document are subject to change; Banner reserves the right to modify product specifications or update documentation at any time. Specifications and product information in English supersede that which is provided in any other language. For the most recent version of any documentation, refer to: www.bannerengineering.com.

For patent information, see www.bannerengineering.com/patents.

© Banner Engineering Corp. All rights reserved.
www.bannerengineering.com

LinkedIn

X (formerly Twitter)

Facebook



© 2025. All rights reserved.
www.bannerengineering.com