Model	Output Configuration	Output Type	Mode	Indicators			Override Function	Connections
				Color 1	Color 2	Color 3		
K50	A = normally open; output conducts when momentary pushbutton switch is actuated	P = PNP (sourcing)	PB = Pushbutton	G = Green R = Red Y = Yellow B = Blue W = White			F2 = Color 2 overrides Color 1; Color 3 overrides Color 1 and 2	Blank = PVC 2 meter 8-conductor cable
	R = normally closed; output conducts when momentary pushbutton switch is not actuated	N = NPN (sinking)						QP8 = PVC 6" Pigtail with 8-pin Euro QD
								QPMA8 = PUR 6" Pigtail with 8-pin Euro QD

Model Sample: K50APPBGRYF2QP8

Parameters	Specifications
Supply Voltage and Current	12 to 30V dc, less than 90mA maximum current @ 12V dc, (exclusive of load); less than 60mA maximum current @ 30V dc, (exclusive of load).
Supply Protection Circuitry	Protected against reverse polarity and transient voltages.
Output Rating	150 mA maximum; off-state leakage current <1uA at 30V dc; On-state voltage <2V at 10mA dc; <2.5V at 150mA dc.
Output Protection	Protected against false power-up and continuous overload or short circuit of output.
Output Response	10 mS "ON" and "OFF".
Operating Conditions	Temperature: -40° to +50°C

For further information, contact the Applications Engineering Department at (763) 544-3164.

WARNING . . . Not To Be Used for Personnel Protection
Never use these products as sensing devices for personnel protection.
Doing so could lead to serious injury or death.

These sensors do NOT include the self-checking redundant circuitry necessary to allow their use in personnel safety applications.
A sensor failure or malfunction can cause either an energized or de-energized sensor output condition.
Consult your current Banner Safety Products catalog for safety products which meet OSHA, ANSI and IEC standards for personnel protection.

Banner Engineering Corp.
9714 Tenth Avenue North
Minneapolis, MN 55441
www.bannerengineering.com

Specifications for:

K50 PUSHBUTTON 3-COLOR F2 MODELS

Date: 4-21-09 | Lit p/n: 138085 | Lit pg: 1 of 3 | Rev. B

ПРОМЭЛЕКТРОНИКА/ sales@prom-elec.com

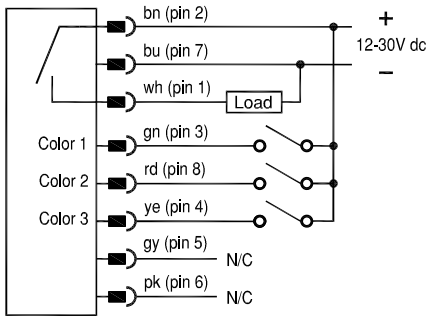

PNP
Normally Open

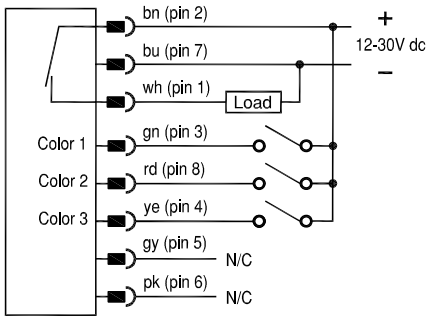

PNP
Normally Closed

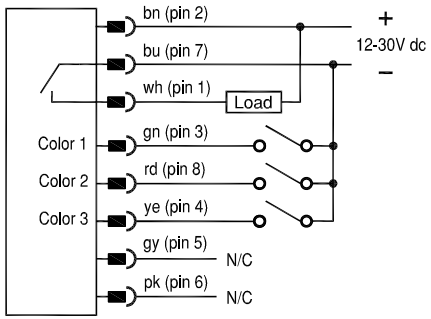

NPN
Normally Open

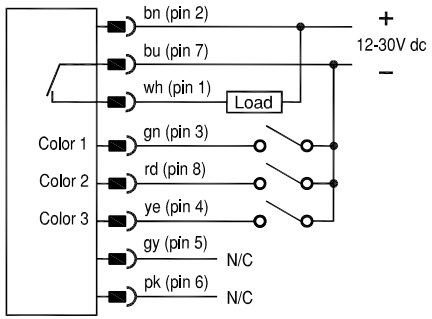

NPN
Normally Closed

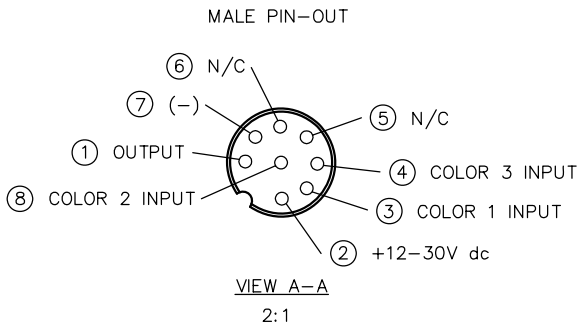

VIEW A–A
2:1

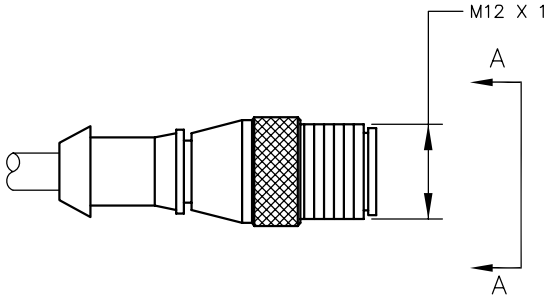

QP8 / QPMA8 Models

For further information, contact the Applications Engineering Department at (763) 544-3164.

WARNING . . . Not To Be Used for Personnel Protection

Never use these products as sensing devices for personnel protection.
Doing so could lead to serious injury or death.

These sensors do NOT include the self-checking redundant circuitry necessary to allow their use in personnel safety applications.
A sensor failure or malfunction can cause either an energized or de-energized sensor output condition.
Consult your current Banner Safety Products catalog for safety products which meet OSHA, ANSI and IEC standards for personnel protection.

Banner Engineering Corp.
9714 Tenth Avenue North
Minneapolis, MN 55441
www.bannerengineering.com

Specifications for:

K50 PUSHBUTTON 3-COLOR F2 MODELS

Truth Tables

PNP Models					
Input Actions:				Unit Function:	
Job Input #1: Pin 3 Green Wire	Job Input #2: Pin 8 Red Wire	Job Input #3: Pin 4 Yellow Wire	Pushbutton (Action)	Output: Pin 1 White Wire	LED Function
Open or -Vdc	Open or -Vdc	Open or -Vdc	Not Actuated	Not Conducting (OFF)	Light OFF
Open or -Vdc	Open or -Vdc	Open or -Vdc	Actuated	Conducting (ON)	Light OFF
+Vdc	Open or -Vdc	Open or -Vdc	Don't Care	NA	Job Light #1 ON
+Vdc	+Vdc	Open or -Vdc	Don't Care	NA	Job Light #2 ON
+Vdc	+Vdc	+Vdc	Don't Care	NA	Job Light #3 ON
Open or -Vdc	+Vdc	Open or -Vdc	Don't Care	NA	Job Light #2 ON
Open or -Vdc	+Vdc	+Vdc	Don't Care	NA	Job Light #3 ON
Open or -Vdc	Open or -Vdc	+Vdc	Don't Care	NA	Job Light #3 ON
+Vdc	Open or -Vdc	+Vdc	Don't Care	NA	Job Light #3 ON

NPN Models					
Input Actions:				Unit Function:	
Job Input #1: Pin 3 Green Wire	Job Input #2: Pin 8 Red Wire	Job Input #3: Pin 4 Yellow Wire	Pushbutton (Action)	Output: Pin 1 White Wire	LED Function
Open or +Vdc	Open or +Vdc	Open or +Vdc	Not Actuated	Not Conducting (OFF)	Light OFF
Open or +Vdc	Open or +Vdc	Open or +Vdc	Actuated	Conducting (ON)	Light OFF
-Vdc	Open or +Vdc	Open or +Vdc	Don't Care	NA	Job Light #1 ON
-Vdc	-Vdc	Open or +Vdc	Don't Care	NA	Job Light #2 ON
-Vdc	-Vdc	-Vdc	Don't Care	NA	Job Light #3 ON
Open or +Vdc	-Vdc	Open or +Vdc	Don't Care	NA	Job Light #2 ON
Open or +Vdc	-Vdc	-Vdc	Don't Care	NA	Job Light #3 ON
Open or +Vdc	Open or +Vdc	-Vdc	Don't Care	NA	Job Light #3 ON
-Vdc	Open or +Vdc	-Vdc	Don't Care	NA	Job Light #3 ON

WARNING . . . Not To Be Used for Personnel Protection

Never use these products as sensing devices for personnel protection.
Doing so could lead to serious injury or death.

These sensors do NOT include the self-checking redundant circuitry necessary to allow their use in personnel safety applications.
A sensor failure or malfunction can cause either an energized or de-energized sensor output condition.
Consult your current Banner Safety Products catalog for safety products which meet OSHA, ANSI and IEC standards for personnel protection.

Banner Engineering Corp.
9714 Tenth Avenue North
Minneapolis, MN 55441
www.bannerengineering.com

Specifications for:

K50 PUSHBUTTON 3-COLOR F2 MODELS