PSDINP Series Power Supply

Datasheet

DIN Rail Mount 24 Volt Power Supply for Hazardous Areas

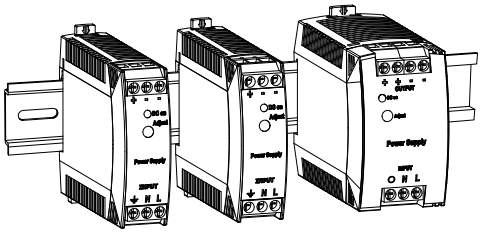

- Industry accepted 24 V dc power supply for hazardous and non-hazardous locations
- Class I, Division 2 (Groups A, B, C, D) T4 approvals
- Universal input (100 to 240 V ac) accepts 88 to 375 V dc
- Protection from short circuit, overloads, and over-voltage
- Mounts on DIN rail TS-35/7.5 or 15
- NEC class 2 compliant
- Adjustable Output Voltage
- LED indicator for DC on active signal
- Wide temperature range –10 °C to 70 °C (–14 °F to 158 °F)
- Cooling by free air convection

Models

Model	PULS Equivalent	Output Current and Voltage	Input Voltage
PSDINP-24-06	ML15.241	0.63 A at 24 V dc (15 W)	100 to 240 V ac or 88 to 375 V dc
PSDINP-24-13	ML30.241	1.3 A at 24 V dc (30 W)	
PSDINP-24-25	ML60.241	2.5 A at 24 V dc (60 W)	

Note: When placing an order, only order the **PSDINP-24-xx** model numbers.

Installation

The user is responsible for satisfying all local, state, and national laws, rules, codes, and regulations relating to the use of this product and its application. Refer to the PULS datasheets (ML15/ML30: DS-ML15.241-EN, ML60: DS-ML60.241-EN) at *www.pulspower.com* for all installation information and requirements.

Use DIN-rails according to EN 60715 or EN 50022 with a height of 7.5 or 15mm. Orient the power supply so that the output terminals are on top and the input terminals are on the bottom. For other orientations, refer to the PULS datasheet.

Do not obstruct air flow because the unit is convection cooled. Keep the ventilation grid free of any obstructions. Keep the following installation clearances when the power supply is permanently fully loaded:

- Left/right: 0 mm (or 15 mm in case the adjacent device is a heat source)
- Top: 40 mm
- Bottom: 20 mm

WARNING: EXPLOSION HAZARDS— Use in hazardous location areas (Class1/Division2)—Units that are marked with "Class I Div 2" are suitable for use in Class I Division 2 Groups A, B, C, D (T4) locations. Substitution of components may impair suitability for this environment. Do not disconnect the unit or operate the voltage adjustment unless power has been switched off or the area is known to be non-hazardous. A suitable enclosure must be provided for the unit which has a minimum protection of IP54 and fulfils the requirements of the EN 60079-15:2010.

WARNING: Shock Hazard and Hazardous Energy—Always disconnect power from the device and the machine being controlled before making any connections or replacing any component. Electrical installation and wiring must be made by Qualified Personnel and must comply with the relevant electrical standards and wiring codes, such as the NEC (National Electrical Code), ANSI NFPA79, or IEC 60204-1, and all applicable local standards and codes. **Lockout/tagout procedures may be required.** Refer to OSHA 29CFR1910.147, ANSI Z244-1, ISO 14118, or the appropriate standard for controlling hazardous energy.

Original Document
180340 Rev. B

2 October 2018

180340

ПРОМЭЛЕКТРОНИКА/ sales@prom-elec.com

WARNING: Risk of electrical shock, fire, personal injury or death.

1. Do not use the power supply without proper grounding (Protective Earth).
2. Turn power off before working on the device. Protect against inadvertent re-powering.
3. Make sure that the wiring is correct by following all local and national codes.
4. Do not modify or repair the unit.
5. Do not open the unit as high voltages are present inside.
6. Use caution to prevent any foreign objects from entering the housing.
7. Do not use in wet locations or in areas where moisture or condensation can be expected.
8. Do not touch during power-on, and immediately after power-off. Hot surfaces may cause burns.

Specifications

If there are any discrepancies between this document and information provided by PULS, the PULS information takes precedence.

Supply Voltage
AC: 100 to 240 V ac (–15%/+10%) at 50–60Hz
DC: 110 to 300 V dc (–20%/+25%)[1]

AC Input Current

Model	120 V ac 60 Hz	230 V ac 50 Hz
PSDINP-24-06	0.28 A	0.17 A
PSDINP-24-13	0.54 A	0.3 A
PSDINP-24-25	0.98 A	0.58 A

Power Factor

Model	120 V ac 60 Hz	230 V ac 50 Hz
PSDINP-24-06	0.51	0.44
PSDINP-24-13	0.52	0.49
PSDINP-24-25	0.58	0.5

Output Voltage
24–28 V dc
Factory setting at full load: 24.5 V typical

Output Current/Power

Model	Power	24 V dc	28 V dc
PSDINP-24-06	15 W	0.63 A	0.54 A
PSDINP-24-13	30 W	1.3 A	1.1 A
PSDINP-24-25	60 W	2.5 A	2.1 A

Operating Conditions
–10 °C to 70 °C
PSDINP-24-06 Derating: 0.4 W per °C at 60 to 70 °C
PSDINP-24-13 Derating: 0.8 W per °C at 60 to 70 °C
PSDINP-24-25 Derating: 1.5 W per °C at 60 to 70 °C
5 to 95% relative humidity (IEC 60068-2-30)

Class of Protection IEC 61140
I (PE/Ground connection required)

Allowed Voltage L or N to Earth
Maximum: 264 V ac / 375 V dc

Input Inrush Current (typical)

Model	120 V ac 60 Hz	230 V ac 50 Hz
PSDINP-24-06	16 A	13 A
PSDINP-24-13	18 A	35 A
PSDINP-24-25	16 A	32 A

Hold-up Time

Model	120 V ac 60 Hz	230 V ac 50 Hz
PSDINP-24-06	47 ms	196 ms
PSDINP-24-13	31 ms	141 ms
PSDINP-24-25	24 ms	107 ms

Degree of Pollution (non-conductive)
2
EN 50178, IEC 62103, Do not energize while condensation is present. For use in a controlled environment according to CSA 22.2 No 107.1-01.

Environmental Rating
IP20 (EN 60529)

Output Over-voltage Protection (OVP, max.)
PSDINP-24-06: 37 V dc
PSDINP-24-13: 38 V dc
PSDINP-24-25: 32.5 V dc

Certifications

IND. CONT. EQ. UL 508

UL 60950-1, NEC Class 2

CSA 22.2 No 107.1;Class I, Div 2

EMC, LVD, RoHS

[1] Use a battery or a similar DC source. Connect +pole to L and -pole to N. A supply from the intermediate DC-bus of a frequency converter is not recommended and can cause a malfunction or damage the unit.



PSDINP-24-06
PSDINP-24-13



PSDINP-24-25

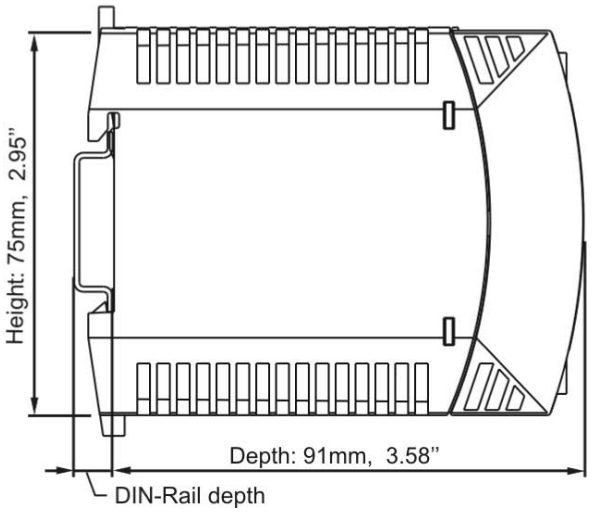

Banner Engineering Corp. Limited Warranty

Banner Engineering Corp. warrants its products to be free from defects in material and workmanship for one year following the date of shipment. Banner Engineering Corp. will repair or replace, free of charge, any product of its manufacture which, at the time it is returned to the factory, is found to have been defective during the warranty period. This warranty does not cover damage or liability for misuse, abuse, or the improper application or installation of the Banner product.

THIS LIMITED WARRANTY IS EXCLUSIVE AND IN LIEU OF ALL OTHER WARRANTIES WHETHER EXPRESS OR IMPLIED (INCLUDING, WITHOUT LIMITATION, ANY WARRANTY OF MERCHANTABILITY OR FITNESS FOR A PARTICULAR PURPOSE), AND WHETHER ARISING UNDER COURSE OF PERFORMANCE, COURSE OF DEALING OR TRADE USAGE.

This Warranty is exclusive and limited to repair or, at the discretion of Banner Engineering Corp., replacement. **IN NO EVENT SHALL BANNER ENGINEERING CORP. BE LIABLE TO BUYER OR ANY OTHER PERSON OR ENTITY FOR ANY EXTRA COSTS, EXPENSES, LOSSES, LOSS OF PROFITS, OR ANY INCIDENTAL, CONSEQUENTIAL OR SPECIAL DAMAGES RESULTING FROM ANY PRODUCT DEFECT OR FROM THE USE OR INABILITY TO USE THE PRODUCT, WHETHER ARISING IN CONTRACT OR WARRANTY, STATUTE, TORT, STRICT LIABILITY, NEGLIGENCE, OR OTHERWISE.**

Banner Engineering Corp. reserves the right to change, modify or improve the design of the product without assuming any obligations or liabilities relating to any product previously manufactured by Banner Engineering Corp. Any misuse, abuse, or improper application or installation of this product or use of the product for personal protection applications when the product is identified as not intended for such purposes will void the product warranty. Any modifications to this product without prior express approval by Banner Engineering Corp will void the product warranties. All specifications published in this document are subject to change; Banner reserves the right to modify product specifications or update documentation at any time. Specifications and product information in English supersede that which is provided in any other language. For the most recent version of any documentation, refer to: *www.bannerengineering.com*.

For patent information, see *www.bannerengineering.com/patents*.

© Banner Engineering Corp. All rights reserved