Features

Rogowski coil current sensors are used to monitor AC current for various devices. The Rogowski coil takes a high current input and produces a proportional low-voltage, low-current signal that is then converted into Modbus. The compact size and the ability to easily install on conductors make them well-suited for installation on existing applications.

- Monitors AC current of motors, sub-panels, and facilities
- Pre-scaled and pre-configured sensor with a Modbus output
- Sensing loop can be opened, allowing for simple installation

Models

Models	Coil Diameter (mm)	AC Current Range (A)	
S15S-R500-MQ	50	500	
S15S-R1000-MQ	50	1000	
S15S-R3000-MQ	200	3000	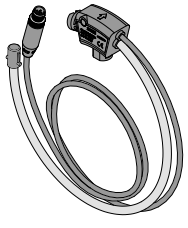
S15S-R6000-MQ	200	6000	

Installing the Rogowski Coil Sensor

Rogowski coil current sensors should be installed around a single conductor with the arrow pointing toward the load. The sensing loop can be opened to simplify installations on existing wiring. Refer to the diagrams below for additional instructions.

Installing a current transformer relative to the power supply/motor

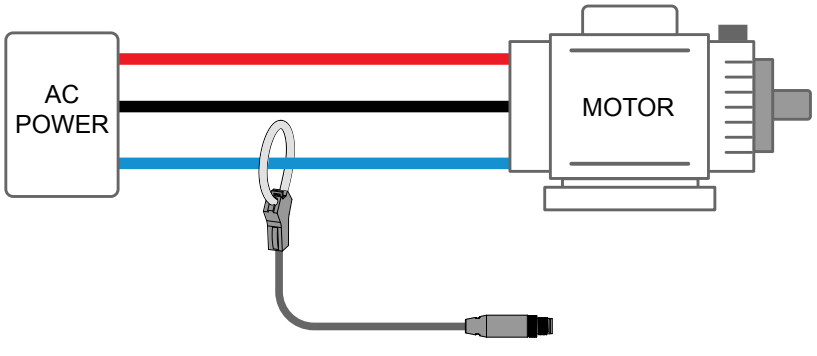

Installing a single conductor on the current transformer

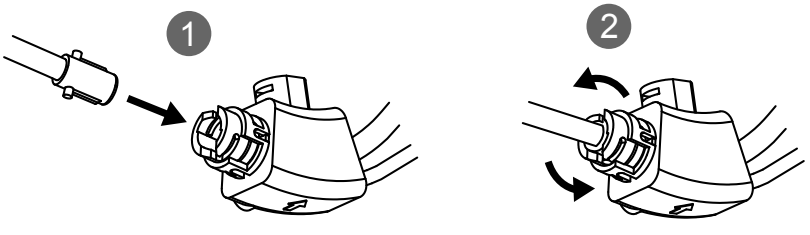

1. Align tabs on the loop connector and insert as shown.

Original Instructions
13-Aug-25

© Banner Engineering Corp. All rights reserved.
www.bannerengineering.com

237920
p/n: 237920 Rev. C

ПРОМЭЛЕКТРОНИКА/ sales@prom-elec.com

2. Twist to lock into place.
3. Twist in the opposite direction and pull out to release the connection.

Installing the 50mm current transformer loop model

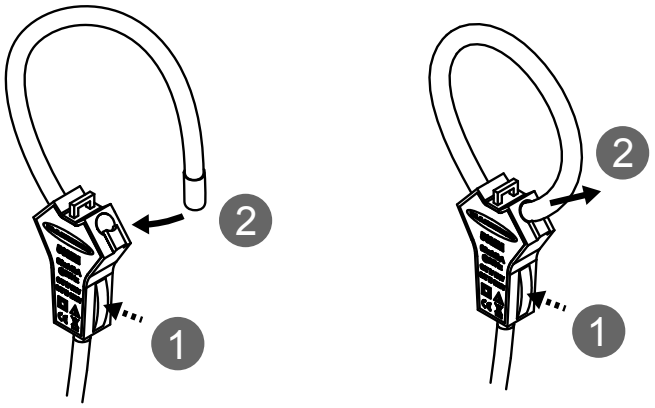

To install the Rogowski coil current sensor loop model:

1. Press the button on the side of the connector.
2. Insert the loop connection and release the button.

To open the loop:

1. Press the button on the side of the connector.
2. Pull out the loop connection and release the button.

Wiring the Rogowski Coil Sensor

Male	Signal Description
Pin 1	10 V DC to 30 V DC
Pin 2	RS-485/D1/B/+
Pin 3	Ground
Pin 4	RS-485/D0/A/-

WARNING: Electrical connections must be made by qualified personnel in accordance with local and national electrical codes and regulations.

Configuration Instructions

Sensor Configuration Software

The Sensor Configuration Software offers an easy way to manage converter Modbus settings, retrieve data, and visually show converter data. The Sensor Configuration Software runs on any Windows machine and uses an adapter cable (BWA-UCT-900, p/n 19970) to connect the converter to the computer.

Download the most recent version of the Sensor Configuration Software from the Banner Engineering website: https://info.bannerengineering.com/cs/groups/public/documents/software/b_3128586.exe.

Modbus Configuration

Modbus Register Address	Type	Name	I/O Range	Description	Notes	Default[1]
IO Data Out						

Continued on page 3

[1] Based on the model selected

© Banner Engineering Corp. All rights reserved.
www.bannerengineering.com

Continued from page 2

Modbus Register Address	Type	Name	I/O Range	Description	Notes	Default
40001	uint16, Read Only	IO Data	0-65535	Analog Data output	AC RMS Current (A) =Register Value/10	500A= 0-5000 1000A= 0-10000 3000A= 0-30000 6000A= 0-60000
40002	bool, Read Only	IO Alarm State	-	Alarm State for IO based on Min and Max thresholds defined in Analog In Min Value () and Analog In Max Value ()	0=Within threshold range; 1=Out of threshold range	-
40003	int16, Read Only	IO Error Status	STATUS_ERROR_TYPE_NO_ERROR=0; STATUS_ERROR_TYPE_BELOW_MIN=1; STATUS_ERROR_TYPE_ABOVE_MAX=2	Status of program	0-2 value	-
40801	uint16, Read Only	Measurement List Max			FIFO maximum	
40802	uint16, Read Only	Measurement List Min			FIFO minimum	
40803	uint16, Read Only	Measurement List Mean			FIFO mean	
40811-40820	uint16, Read Only	Measurement List	0-65535	FIFO (first in, first out) list of the past 10 measurements		
IO Data Rate						
41201	uint16, Read and Write	Sample IO	0-65535	Sample interval time for IO	Increments of 62.5 ms	16 (1 second)
Minimum Value						
41204	uint16, Read and Write	Minimum Analog Value	-	Minimum analog value for data read	Minimum value: 0	0
Maximum Value						
41205	uint16, Read and Write	Maximum Analog Value	-	Max analog value for data read	Maximum value	5000, 10000, 30000, 60000
Line Frequency						
41011	int16, Read and Write	AC Line Frequency	1 = 60 Hz 2 = 50 Hz	AC Line Frequency	1 = 60 Hz 2 = 50 Hz	1
COMs Settings						
46101	Baud Rate	-	0 = 9.6k 1 = 19.2k 2 = 38.4k	-	-	1
46102	Parity	-	0 = None 1 = Odd 2 = Even	-	-	0
46103	Modbus Slave Address	-	1 to 247	-	-	1

Specifications

Supply Voltage
10 V DC to 30 V DC at 50 mA maximum

Power Pass-Through Current
4 A maximum

Supply Protection Circuitry
Protected against reverse polarity and transient voltages

Leakage Current Immunity
400 µA

Resolution
12-bits

Performance
Accuracy: ≤ 5% of full scale
Full-Scale Position Error: ±1% maximum
Full-Scale Maximum Bandwidth: 1 Hz to 1 MHz
Phase Error: ≤ 5% of full scale

Electrical
Voltage Insulation- Coil: 1000V
Voltage Insulation- Cable: 500V

Connections
Integral male/female 4-pin M12 quick disconnect

Indicators
Green: power
Amber: Modbus communications

Construction
Coupling Material: Nickel-plated brass
Connector Body: PVC translucent black
Coil and Cable: TPR, UL94-V0

Vibration and Mechanical Shock
Meets IEC 60068-2-6 requirements (Vibration: 10 Hz to 55 Hz, 0.5 mm amplitude, 5 minutes sweep, 30 minutes dwell)
Meets IEC 60068-2-27 requirements (Shock: 15G 11 ms duration, half sine wave)

Environmental Rating
IP65, IP67, IP68

Operating Conditions
Temperature: –30 °C to +70 °C (–22 °F to +158 °F)
≤ 85% at +70 °C maximum relative humidity (non-condensing)
Storage Temperature: –40 °C to +80 °C (–40 °F to +176 °F)

© Banner Engineering Corp. All rights reserved.
www.bannerengineering.com

Product Identification

SNAP SIGNAL®

Certifications

Banner Engineering BV
Park Lane, Culliganlaan 2F bus 3
1831 Diegem, BELGIUM

Turck Banner LTD Blenheim House
Blenheim Court
Wickford, Essex SS11 8YT
GREAT BRITAIN

FCC Part 15 Class A for Unintentional Radiators

This equipment has been tested and found to comply with the limits for a Class A digital device, pursuant to Part 15 of the FCC Rules. These limits are designed to provide reasonable protection against harmful interference when the equipment is operated in a commercial environment. This equipment generates, uses, and can radiate radio frequency energy and, if not installed and used in accordance with the instruction manual, may cause harmful interference to radio communications. Operation of this equipment in a residential area is likely to cause harmful interference in which case the user will be required to correct the interference at his own expense.

(Part 15.21) Any changes or modifications not expressly approved by the party responsible for compliance could void the user's authority to operate this equipment.

Industry Canada ICES-003(B)

This device complies with CAN ICES-3 (B)/NMB-3(B). Operation is subject to the following two conditions: 1) This device may not cause harmful interference; and 2) This device must accept any interference received, including interference that may cause undesired operation.

Cet appareil est conforme à la norme NMB-3(B). Le fonctionnement est soumis aux deux conditions suivantes : (1) ce dispositif ne peut pas occasionner d'interférences, et (2) il doit tolérer toute interférence, y compris celles susceptibles de provoquer un fonctionnement non souhaité du dispositif.

Dimensions

50 mm diameter model with QD

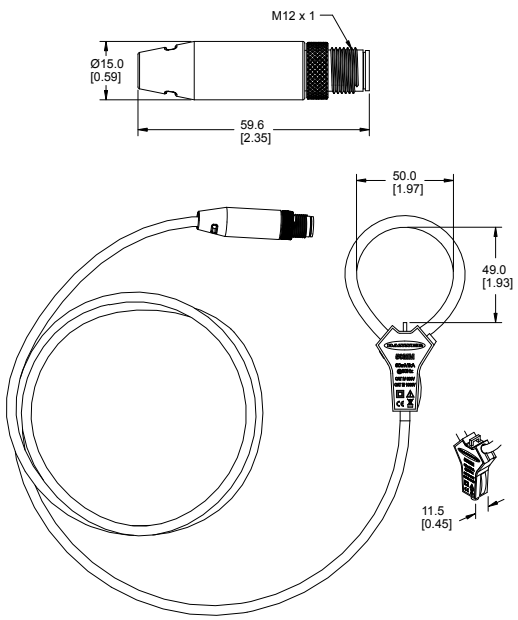

200 mm dia with QD model

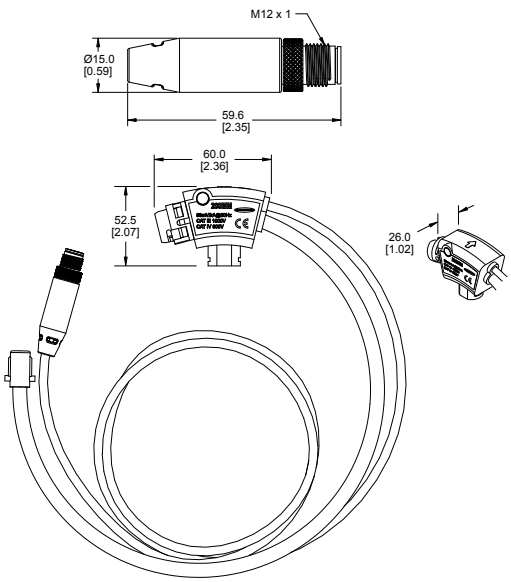

© Banner Engineering Corp. All rights reserved.
www.bannerengineering.com

Accessories

Cordsets

4-Pin Double-Ended M12 Female to M12 Male Cordsets				
Model	**Length**	**Style**	**Dimensions**	**Pinout**
MQDEC-401SS	0.31 m (1 ft)	Male Straight/Female Straight	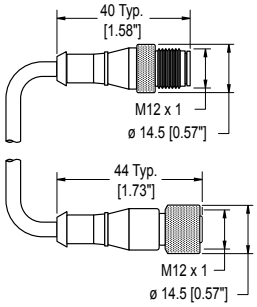	Female 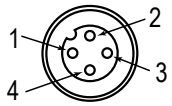 Male 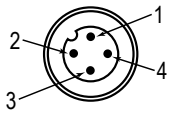 1 = Brown 2 = White 3 = Blue 4 = Black
MQDEC-402SS	0.91 m (2.99 ft)			
MQDEC-406SS	1.83 m (6 ft)			
MQDEC-412SS	3.66 m (12 ft)			
MQDEC-415SS	4.58 m (15 ft)			
MQDEC-420SS	6.10 m (20 ft)			
MQDEC-430SS	9.14 m (30.2 ft)			
MQDEC-450SS	15.2 m (49.9 ft)			

Banner Engineering Corp Limited Warranty

Banner Engineering Corp. warrants its products to be free from defects in material and workmanship for one year following the date of shipment. Banner Engineering Corp. will repair or replace, free of charge, any product of its manufacture which, at the time it is returned to the factory, is found to have been defective during the warranty period. This warranty does not cover damage or liability for misuse, abuse, or the improper application or installation of the Banner product.

THIS LIMITED WARRANTY IS EXCLUSIVE AND IN LIEU OF ALL OTHER WARRANTIES WHETHER EXPRESS OR IMPLIED (INCLUDING, WITHOUT LIMITATION, ANY WARRANTY OF MERCHANTABILITY OR FITNESS FOR A PARTICULAR PURPOSE), AND WHETHER ARISING UNDER COURSE OF PERFORMANCE, COURSE OF DEALING OR TRADE USAGE.

This Warranty is exclusive and limited to repair or, at the discretion of Banner Engineering Corp., replacement. **IN NO EVENT SHALL BANNER ENGINEERING CORP. BE LIABLE TO BUYER OR ANY OTHER PERSON OR ENTITY FOR ANY EXTRA COSTS, EXPENSES, LOSSES, LOSS OF PROFITS, OR ANY INCIDENTAL, CONSEQUENTIAL OR SPECIAL DAMAGES RESULTING FROM ANY PRODUCT DEFECT OR FROM THE USE OR INABILITY TO USE THE PRODUCT, WHETHER ARISING IN CONTRACT OR WARRANTY, STATUTE, TORT, STRICT LIABILITY, NEGLIGENCE, OR OTHERWISE.**

Banner Engineering Corp. reserves the right to change, modify or improve the design of the product without assuming any obligations or liabilities relating to any product previously manufactured by Banner Engineering Corp. Any misuse, abuse, or improper application or installation of this product or use of the product for personal protection applications when the product is identified as not intended for such purposes will void the product warranty. Any modifications to this product without prior express approval by Banner Engineering Corp will void the product warranties. All specifications published in this document are subject to change; Banner reserves the right to modify product specifications or update documentation at any time. Specifications and product information in English supersede that which is provided in any other language. For the most recent version of any documentation, refer to: www.bannerengineering.com.

For patent information, see www.bannerengineering.com/patents.

© Banner Engineering Corp. All rights reserved.
www.bannerengineering.com