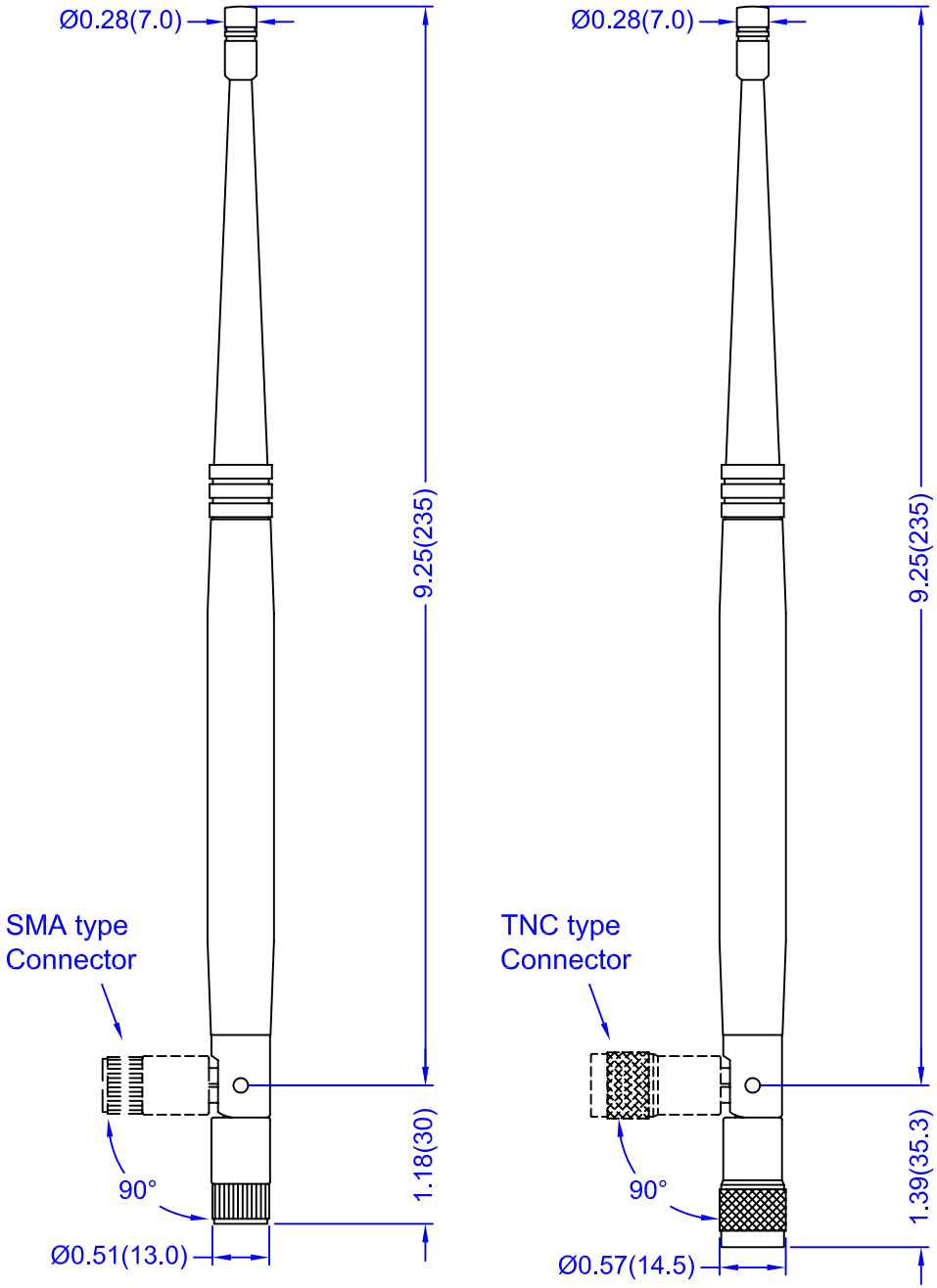

Electrical Properties:

Frequency Range:	2.4~2.5 GHz
Impedance:	50Ω nominal
VSWR:	<2.0:1
Gain:	7 dBi
Radiation:	Omni
Polarization:	Vertical

Mechanical Properties:

Material:	
Whip:	Polyurethene(Black)
Swivel Mechanism:	Polycarbonate(Black)
Connector:	Brass with black chrome plating
Operation Temp.:	-20°C to +65°C
Storage Temp.:	-30°C to +75°C

This is a RoHS compliant product.

TITLE	2.4GHz Swivel Antenna-171 Model	Rev. Date	SHEET
		01/20/06	1 of 2
UNIT	DWG. NO.	S171XX - 2450S	
in.(mm)			
SCALE			
none			

NEARSON

http://www.nearson.com

All rights reserved *NEARSON INC.* Specification is subject to change without notice.

ПРОМЭЛЕКТРОНИКА/ sales@prom-elec.com

Connector Interface



SMA Plug
(AM)



TNC Plug
(TC)



SMA Plug Reverse Polarity
(AH)



TNC Plug Reverse Polarity
(TR)

E-Plane Pattern @ 2.45GHz

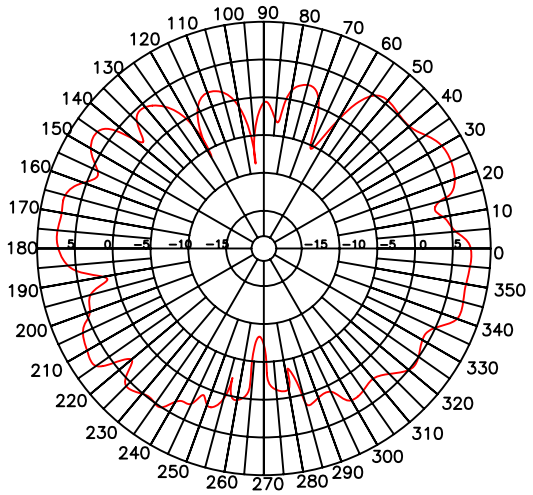

H-Plane Pattern @ 2.45GHz

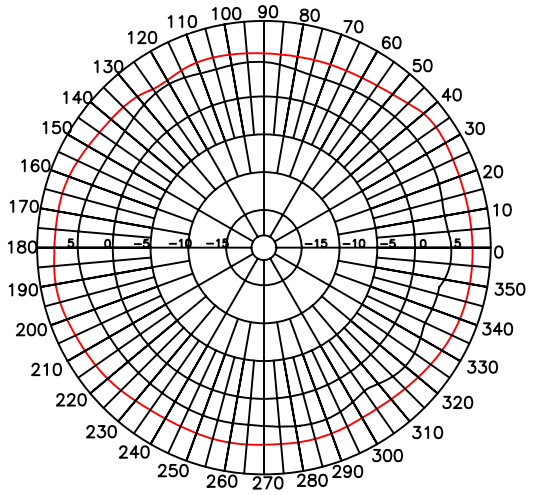

Series Part Numbers

Connector Code -XX-	Description	P / N
AM	SMA Plug	S171AM-2450S
AH	SMA Plug Reverse Polarity	S171AH-2450S
TC	TNC Plug	S171TC-2450S
TR	TNC Plug Reverse Polarity	S171TR-2450S

TITLE	2.4GHz Swivel Antenna-171 Model	Rev. Date	SHEET
		01/20/06	2 of 2
UNIT	DWG. NO.	S171XX - 2450S	
in.(mm)			
SCALE			
none			

NEARSON

All rights reserved *NEARSON INC.* Specification is subject to change without notice.

http://www.nearson.com