QS30AAF400 Adjustable-Field Foreground Suppression Sensor

Features

Midsize sensors featuring extended range and foreground suppression mode



- Bipolar discrete outputs, PNP and NPN
- 128-element photo receiver for superior performance on varying colors and textures
- 400 mm sensing range in midsize QS30 housing
- Foreground suppression models for reliable detection when a fixed background is present and the object color or shape varies
- Linear multi-turn screw adjustment of cutoff distance
- Enhanced immunity to fluorescent lights
- Improved temperature compensation to minimize cutoff distance variation due to ambient temperature changes
- Powerful, highly collimated visible red sensing beam allows two sensors to be used in close proximity
- Models available with 2 m or 9 m (6.5 ft or 30 ft) cable or integral metal quick-disconnect, or 150 mm (6 in) pigtail
- Tough ABS housing is rated IEC IP67
- Mounting versatility via popular 30 mm threaded barrel or side-mount

WARNING:

- **Do not use this device for personnel protection**
- Using this device for personnel protection could result in serious injury or death.
- This device does not include the self-checking redundant circuitry necessary to allow its use in personnel safety applications. A device failure or malfunction can cause either an energized (on) or de-energized (off) output condition.

Models

Models	Supply Voltage	Sensing Range	Output Type
QS30AFF400	10 to 30 V DC	Adjustable Cutoff Range: 50 to 400 mm, Maximum Sensing Range: 400 mm	Bipolar (1 NPN and 1 PNP)

Standard 2 m (6.5 ft) cable models are listed.

- To order the 9 m (30 ft) cable model, add suffix **W/30** to the model number (for example, **QS30AFF400 W/30**).
- To order the 5-pin integral QD model, add suffix **Q** to the model number (for example, **QS30AFF400Q**)
- To order the 150 mm (6 in) PVC cable with a 5-pin M12 connector model, add suffix **Q5** to the model number (for example, **QS30AFF400Q5**)

Overview

Banner's WORLD-BEAM® QS30 Adjustable-Field Sensors with Foreground Suppression detect the light reflected from the background. The output changes when the light from the background is blocked.

Sensor Features



In general, if the background is fixed and the color or shape of the objects in the foreground vary, foreground suppression mode will provide reliable detection. A foreground suppression sensor uses the background in the same way a retroreflective sensor would use a reflector. The sensor output will change whenever an object passes between itself and the background. The default mode for foreground suppression sensors is Dark Operate (DO).

1. Green: Power Indicator LED
2. Yellow: Light Sensed Indicator LED (Flashes for Marginal Conditions)
3. Blue/Red: End-of-travel (EOT) Indicator LED
4. Cutoff Distance Adjustment Screw
5. Yellow: Output Indicator LED

Configuration Instructions

QS30AF Sensor Orientation

To ensure reliable detection, orient the sensor as shown in relation to the target to be detected.

Original Instructions
14-Aug-25

© Banner Engineering Corp. All rights reserved.
www.bannerengineering.com

149825
p/n: 149825 Rev. F

ПРОМЭЛЕКТРОНИКА/ sales@prom-elec.com

Optimal Orientation of Target to Sensor

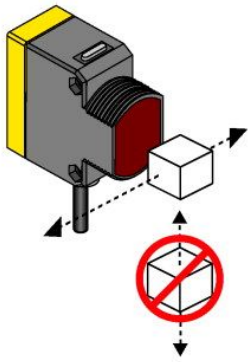

Sensor Setup for Foreground Suppression (Dark Operate Mode)

In dark operate (DO) mode, the output is ON when the target returns less light to the sensor than the configured target and OFF when the sensor detects more light than the configured/taught target.

1. Mount the sensor aimed at the fixed background (the distance to the background must be less than shown in "Figure: Minimum separation distance* between object and background: foreground suppression mode" on page 5 for your background color).
2. Turn the adjustment pot **clockwise** until it clicks and EOT LED turns **on blue** (4 turns).
3. Turn the adjustment pot **counter-clockwise** until the amber Output LED turns **off**. This places the cutoff distance in front of the fixed background (see the figure right).
4. Place the application's darkest object into the sensor's field of view at the maximum sensor to object distance, and verify that the amber Output LED turns **on**. The sensor is optimized for detecting thin objects close to the fixed background and is ready for operation.
   For maximum sensing reliability in applications with variations in background position or color (i.e. conveyor belts with flutter), follow these additional steps.
5. Continuing from step 4, turn the adjustment pot **counter-clockwise**, counting the revolutions, until the amber Output LED turns **off**.
6. Turn the adjustment pot **clockwise** half the number of revolutions from step 5. This will place the cutoff distance midway between the object and the background. The sensor is optimized for reliable detection in applications with thick objects and modest variation in background. The sensor is ready for operation.

Set cutoff distance in front of the fixed background

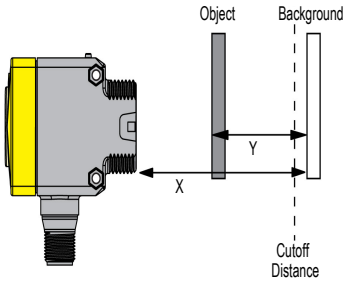

X: Distance to Background

Y: Minimum Separation Between Object and Background

© Banner Engineering Corp. All rights reserved.
www.bannerengineering.com

Setup Example

Foreground Suppression Mode application example
Foreground Suppression Mode (also called Background Detection): The light reflected off the background is detected. The output changes when the light from the background is blocked.

In general, if the background is fixed and the color or shape of the objects in the foreground vary, foreground suppression mode will provide reliable detection. A foreground suppression sensor uses the background in the same way a retroreflective sensor would use a reflector. The sensor output will change whenever an object passes between itself and the background.

To ensure reliable foreground suppression, a minimum separation distance between the object and the background is necessary. See "Figure: Minimum separation distance* between object and background: foreground suppression mode" on page 5 to determine the minimum separation distance.

Example: The sensor is positioned above a black conveyor belt at a distance of 300 mm. The objects on the conveyor are boxes of varying colors. According to "Figure: Minimum separation distance* between object and background: foreground suppression mode" on page 5, the box height must be greater than 15 mm for reliable detection against a black background. In this application, reliable detection will be achieved when set up according to the procedure outlined in Sensor Setup - Foreground Suppression.

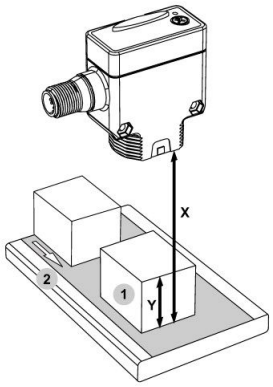

1. Object
2. Background (Conveyor)

X: Distance to Background = 300 mm

Y: Minimum Separation Between Object and Background > 15 mm

Remote Configuration

The Remote Configuration function may be used to SET the sensor's cutoff distance remotely or to disable the cutoff distance adjustment screw for security. Connect the gray/Input wire of the sensor to ground (0 V DC), with a remote switch connected between them. Pulse the gray/Input wire according to the diagrams in the configuration procedures.

The duration of each button click or remote input pulse is defined as T, where T is: 0.04 s < T < 0.8 s.

Connecting the gray/Input wire

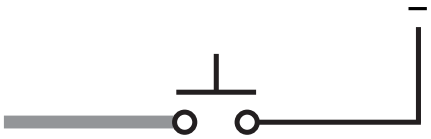

Background SET

The distance to the fixed background is sampled; the sensor optimizes the cutoff distance in front of the distance to the fixed background. In RUN mode, objects located between the sensor face and the cutoff distance are sensed; anything beyond the cutoff distance (e.g., fixed background) is ignored.

Step	Procedure	Result
Set Fixed Background	Present fixed background Single-pulse the gray/Input wire 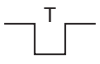	Green Power and Amber Light Sensed LEDs flash alternately 3 times (EOT LED alternately flashes Red/ Blue 3 times at the same time)
Return to Run Mode	Sensor returns automatically to RUN mode	**SET accepted:** Sensor returns directly to RUN mode **SET failed:** Feedback is displayed for 2 seconds (Yellow Light Sensed LED OFF, Green Power LED flashes 4 times)

Cutoff Distance Adjustment Screw Disable/Enable

Step	Procedure	Result
Disable	Quad-pulse the gray/Input wire 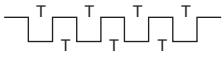	EOT LED flashes Red 4 times Cutoff point adjustment screw disabled

Continued on page 4

© Banner Engineering Corp. All rights reserved.
www.bannerengineering.com

Continued from page 3

Step	Procedure	Result
Enable	Quad-pulse the gray/Input wire 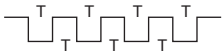	EOT LED flashes Blue 4 times Cutoff point adjustment screw enabled

End-of-Travel (EOT) Indicator LED

Cutoff Distance Adjustment Screw Status	Result
Cutoff distance adjustment screw in between max. and min. end-of-travel limits	EOT LED OFF
Cutoff distance adjustment screw turned clockwise to max. end-of-travel limit	EOT LED ON Blue
Cutoff distance adjustment screw turned counter-clockwise to min. end-of-travel limit	EOT LED ON Red
Cutoff distance adjustment screw turned while disabled	EOT LED alternately flashes Red/Blue 4 times

Output States

Foreground suppression mode

Output	Object Between Sensor Face and Cutoff Distance		No Object Between Sensor Face and Fixed Background	
	LO	DO	LO	DO
Yellow Output LED	OFF	ON	ON	OFF
Black Wire (Pin 4)	OFF	ON	ON	OFF
White Wire (Pin 2)	OFF	ON	ON	OFF
Yellow Light Sensed LED	OFF		ON or Flashing (if < 1.5x excess gain)	

Wiring

Bipolar Outputs

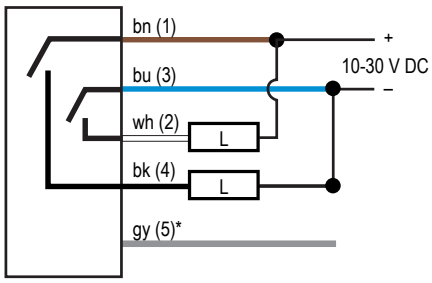

Key:

1 = Brown

2 = White

3 = Blue

4 = Black

5 = Gray (Input*)

L = Load

*Inputs	
or 	DO (default)
	LO
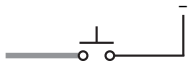	Remote Configuration

Specifications

Sensing Range

Adjustable Cutoff Range: 50 mm to 400 mm

Maximum Sensing Range: 400 mm

Supply Voltage and Current

10 V DC to 30 V DC (10% maximum ripple within specified limits); Current consumption: < 80 mA at 10 V DC; < 40 mA at 30 V DC

Supply Protection

Protected against reverse polarity and transient voltages

Sensing Beam

Visible red LED, 660 nm

© Banner Engineering Corp. All rights reserved.
www.bannerengineering.com

Output Configuration

Bi-polar Models: Solid-state bipolar (SPDT): both sinking and sourcing

Off-state leakage current: < 5 µA at 30 V DC

ON-state saturation voltage

- **NPN:** less than 1.5 V at 100 mA
- **PNP:** less than 2.0 V at 100 mA

Output Protection Circuitry

Protected against false pulse on power-up and continuous overload or short circuit of outputs.

Output Response

5 millisecond ON/OFF; 200 ms delay on power-up; outputs do not conduct during this time

Repeatability

750 µs

Adjustments

Four-turn adjustment screw sets cutoff distance between min. and max. positions, clutched at both ends of travel

Indicators

2 Indicator LEDs on sensor top:

- **Green solid:** Power ON
- **Amber solid:** Light sensed (excess gain > 1.5x)
- **Amber flashing:** Marginal sensing condition (excess gain < 1.5x)

2 Indicator LEDs on sensor back:

- Small Blue/Red End-of-travel (EOT) LED
- Large Amber Output LED

Construction

ABS housing

QD models: nickel-plated brass

Environmental Rating

IP67

Connections

2 m (6.5 ft) 5-wire PVC cable, 9 m (30 ft) PVC cable, or 5-pin integral quick-disconnect or M12 150 mm (6 in) quick-disconnect, depending on model

Operating Conditions

Temperature: –20 °C to +60 °C (–4 °F to +140 °F)

Humidity: 95% at +50 °C maximum relative humidity (non-condensing)

Certifications

CE

Banner Engineering BV
Park Lane, Culliganlaan 2F bus 3
1831 Diegem, BELGIUM

FCC Part 15 Class A for Unintentional Radiators

This equipment has been tested and found to comply with the limits for a Class A digital device, pursuant to Part 15 of the FCC Rules. These limits are designed to provide reasonable protection against harmful interference when the equipment is operated in a commercial environment. This equipment generates, uses, and can radiate radio frequency energy and, if not installed and used in accordance with the instruction manual, may cause harmful interference to radio communications. Operation of this equipment in a residential area is likely to cause harmful interference in which case the user will be required to correct the interference at his own expense.

(Part 15.21) Any changes or modifications not expressly approved by the party responsible for compliance could void the user's authority to operate this equipment.

Industry Canada ICES-003(A)

This device complies with CAN ICES-3 (A)/NMB-3(A). Operation is subject to the following two conditions: 1) This device may not cause harmful interference; and 2) This device must accept any interference received, including interference that may cause undesired operation.

Cet appareil est conforme à la norme NMB-3(A). Le fonctionnement est soumis aux deux conditions suivantes : (1) ce dispositif ne peut pas occasionner d'interférences, et (2) il doit tolérer toute interférence, y compris celles susceptibles de provoquer un fonctionnement non souhaité du dispositif.

Performance Curves

Minimum separation distance between object and background: foreground suppression mode*

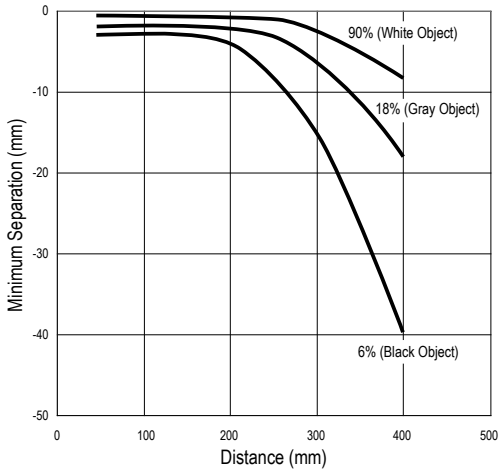

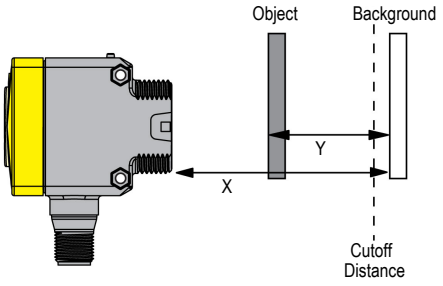

* Targets with severe color contrasts can increase the Minimum Separation Distance

© Banner Engineering Corp. All rights reserved.
www.bannerengineering.com

Typical emitter spot diameter vs. distance

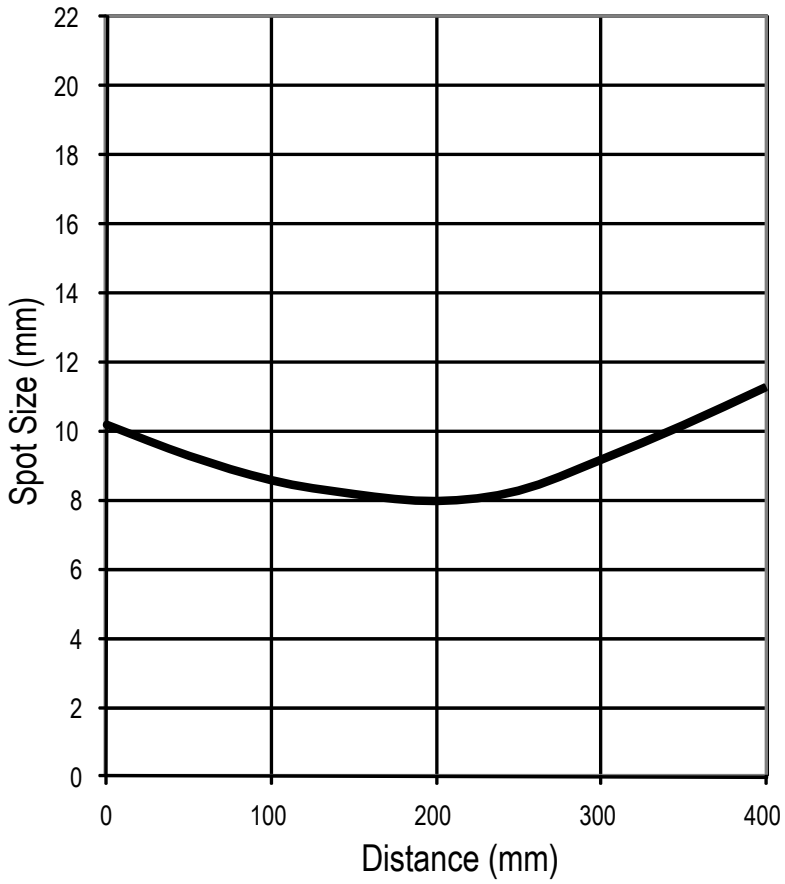

Excess Gain Curves

QS30AFF400 Excess Gain Curve (based on 90% White Card)

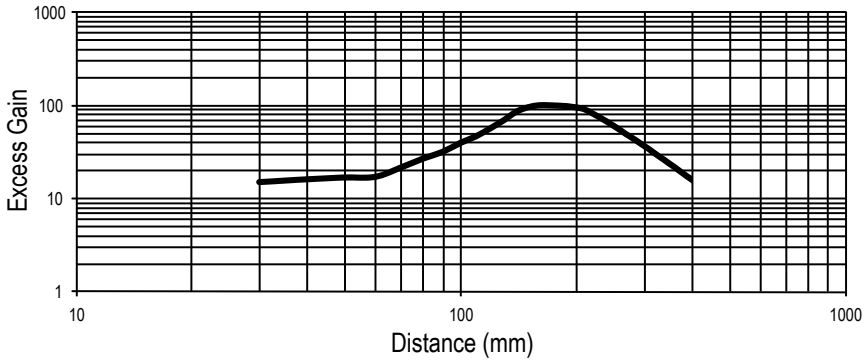

© Banner Engineering Corp. All rights reserved.
www.bannerengineering.com

QS30AF Dimensions (QD Models)

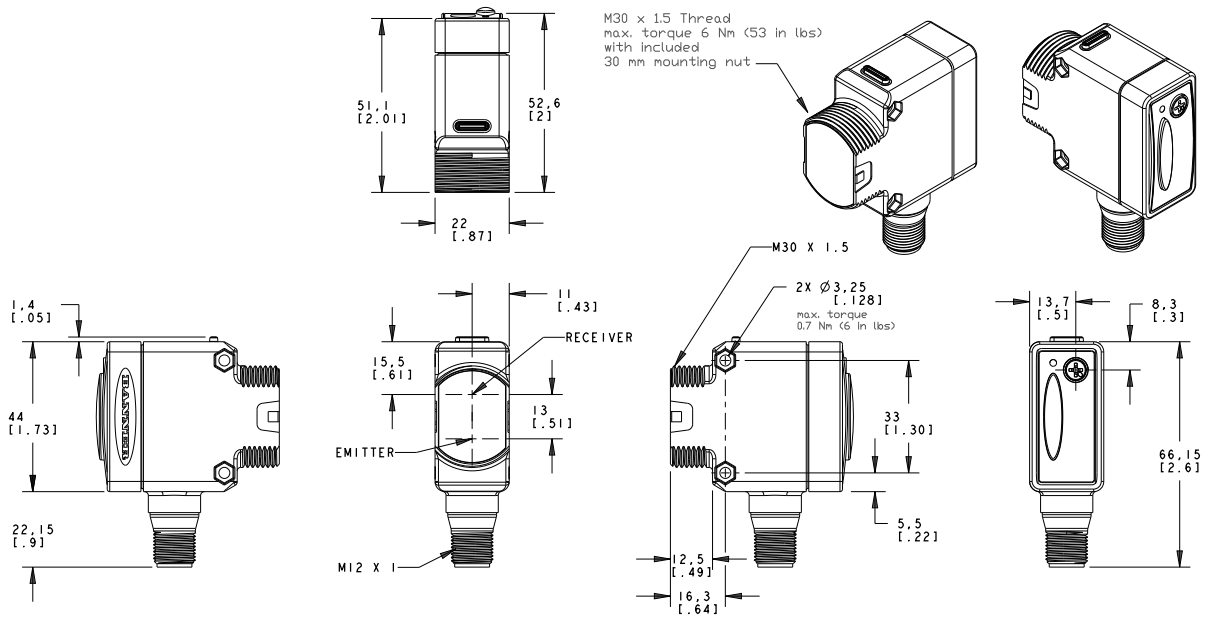

QS30AF Dimensions (Cable Models)

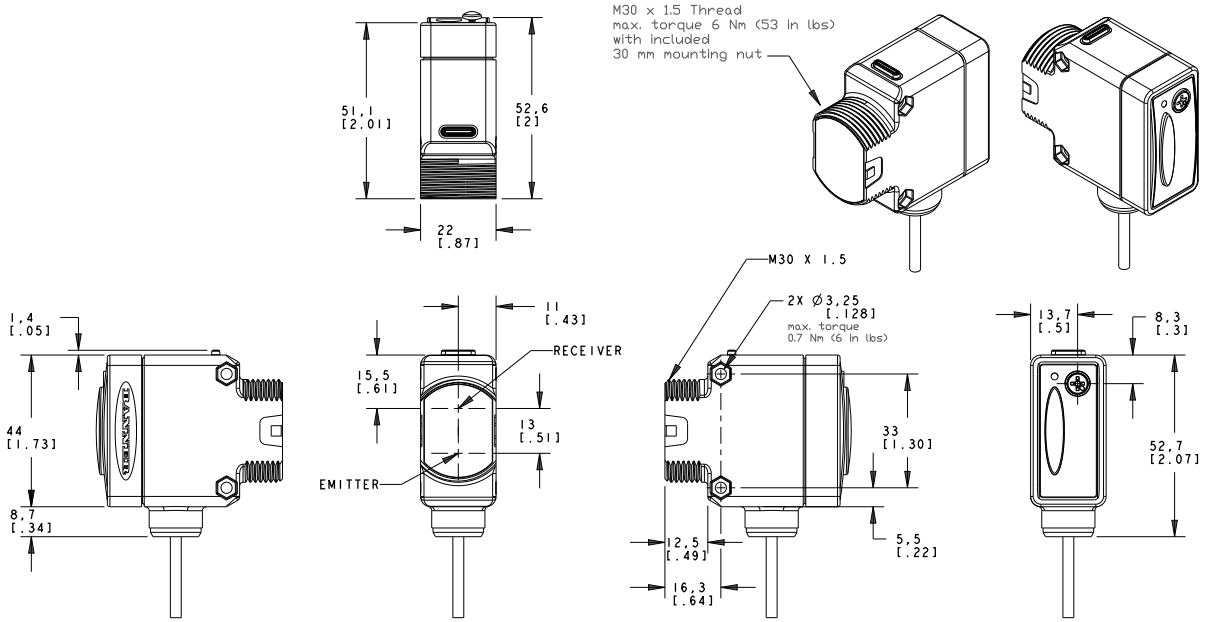

© Banner Engineering Corp. All rights reserved.
www.bannerengineering.com

Quick-Disconnect (QD) Cordsets

5-pin Single-Ended M12 Female Cordsets				
Model	**Length**	**Dimensions (mm)**	**Pinout (Female)**	
BC-M12F5-22-1	1 m (3.28 ft)	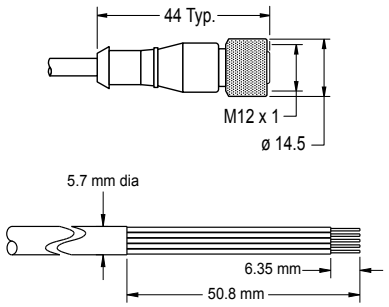	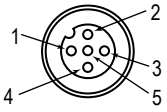	1 = Brown 2 = White 3 = Blue 4 = Black 5 = Gray
BC-M12F5-22-2	2 m (6.56 ft)			
BC-M12F5-22-5	5 m (16.4 ft)			
BC-M12F5-22-8	8 m (26.25 ft)			
BC-M12F5-22-10	10 m (30.81 ft)			
BC-M12F5-22-15	15 m (49.2 ft)			

5-pin Single-Ended M12 Female Right-Angle Cordsets				
Model	**Length**	**Dimensions (mm)**	**Pinout (Female)**	
BC-M12F5A-22-1	1 m (3.28 ft)	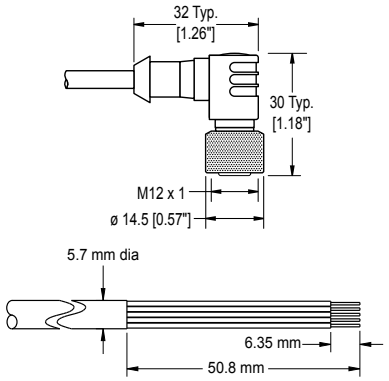	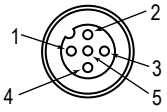	1 = Brown 2 = White 3 = Blue 4 = Black 5 = Gray
BC-M12F5A-22-2	2 m (6.56 ft)			
BC-M12F5A-22-5	5 m (16.4 ft)			
BC-M12F5A-22-8	8 m (26.25 ft)			
BC-M12F5A-22-10	10 m (30.81 ft)			
BC-M12F5A-22-15	15 m (49.2 ft)			

Product Support and Maintenance

Repairs

Contact Banner Engineering for troubleshooting of this device. **Do not attempt any repairs to this Banner device; it contains no field-replaceable parts or components.** If the device, device part, or device component is determined to be defective by a Banner Applications Engineer, they will advise you of Banner's RMA (Return Merchandise Authorization) procedure.

> **IMPORTANT:** If instructed to return the device, pack it with care. Damage that occurs in return shipping is not covered by warranty.

Contact Us

Banner Engineering Corp. | 9714 Tenth Avenue North | Plymouth, MN 55441, USA | Phone: + 1 888 373 6767

For worldwide locations and local representatives, visit www.bannerengineering.com.

Banner Engineering Corp Limited Warranty

Banner Engineering Corp. warrants its products to be free from defects in material and workmanship for one year following the date of shipment. Banner Engineering Corp. will repair or replace, free of charge, any product of its manufacture which, at the time it is returned to the factory, is found to have been defective during the warranty period. This warranty does not cover damage or liability for misuse, abuse, or the improper application or installation of the Banner product.

THIS LIMITED WARRANTY IS EXCLUSIVE AND IN LIEU OF ALL OTHER WARRANTIES WHETHER EXPRESS OR IMPLIED (INCLUDING, WITHOUT LIMITATION, ANY WARRANTY OF MERCHANTABILITY OR FITNESS FOR A PARTICULAR PURPOSE), AND WHETHER ARISING UNDER COURSE OF PERFORMANCE, COURSE OF DEALING OR TRADE USAGE.

This Warranty is exclusive and limited to repair or, at the discretion of Banner Engineering Corp., replacement. **IN NO EVENT SHALL BANNER ENGINEERING CORP. BE LIABLE TO BUYER OR ANY OTHER PERSON OR ENTITY FOR ANY EXTRA COSTS, EXPENSES, LOSSES, LOSS OF PROFITS, OR ANY INCIDENTAL, CONSEQUENTIAL OR SPECIAL DAMAGES RESULTING FROM ANY PRODUCT DEFECT OR FROM THE USE OR INABILITY TO USE THE PRODUCT, WHETHER ARISING IN CONTRACT OR WARRANTY, STATUTE, TORT, STRICT LIABILITY, NEGLIGENCE, OR OTHERWISE.**

© Banner Engineering Corp. All rights reserved.
www.bannerengineering.com

Banner Engineering Corp. reserves the right to change, modify or improve the design of the product without assuming any obligations or liabilities relating to any product previously manufactured by Banner Engineering Corp. Any misuse, abuse, or improper application or installation of this product or use of the product for personal protection applications when the product is identified as not intended for such purposes will void the product warranty. Any modifications to this product without prior express approval by Banner Engineering Corp will void the product warranties. All specifications published in this document are subject to change; Banner reserves the right to modify product specifications or update documentation at any time. Specifications and product information in English supersede that which is provided in any other language. For the most recent version of any documentation, refer to: www.bannerengineering.com.

For patent information, see www.bannerengineering.com/patents.

© Banner Engineering Corp. All rights reserved.