ZMX 3D Measurement Sensors



3D Time of Flight Sensor

- Container fill monitoring made easy
- Detect peak height or volume over a large sensing area
- One unit offers more reliability than multiple single-point sensors
- Easy setup—simple integration, completely self-contained

BANNER®

ПРОМЭЛЕКТРОНИКА/ sales@prom-elec.com

Measure and Monitor the Contents of an Entire Container with One Sensor

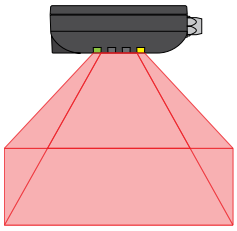

Large Field of View

- Monitor within the entire 60° x 45° field of view
- View entire container, not just a single position

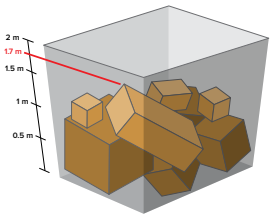

Peak Height

- Continually monitor height
- Send an alarm when peak heights are reached
- 2.5 m range

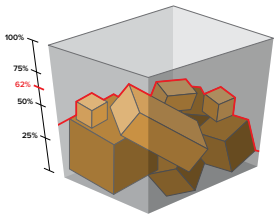

Percent Fill

- Determine overfill of contents or packages
- Use the output to track the fill rate or container statistics

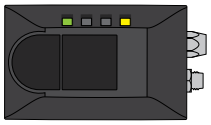

All-in-One Design

- Logic is integrated into the sensor
- No PC or controller needed after initial setup
- No external lighting required

Easy Setup and Integration

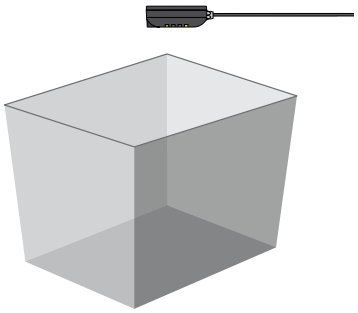

1. Mount the Sensor and Connect

- Built in mounting holes
- Variety of mounting brackets to choose from
- Connect to a PC to begin using Banner's 3D Time of Flight configuration software

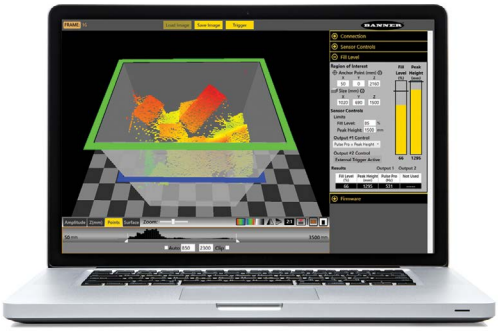

2. Define Sensing Conditions

- Define the anchor point at the bottom of the container
- Define the size of the sensing region
- Choose the sensing criteria for the application: peak height or percent fill (shown above)

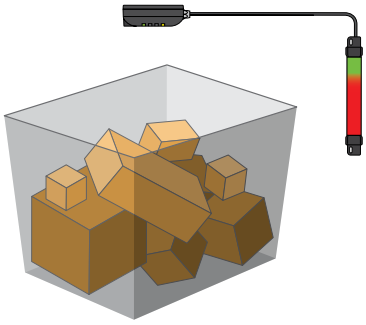

3. Begin Sensing

- Monitor within the entire 60° x 45° field of view
- Does not require any external controllers or PC

Complete Your System



Integrate with a Banner indication light for operator guidance



Detecting When Carts Are Full

Challenge

When packages for shipment are collected into a cart from a conveyor or chute, a human operator or robot needs to be alerted when the cart is full and ready to be replaced with an empty one. Typically, photoelectric and ultrasonic sensors have been used for this detection task, but most have a small-diameter spot. This can provide inaccurate readings, because the packages will naturally fall into a pile of unpredictable shape—potentially with peaks and valleys, or with gaps between boxes—which a small sensor spot could easily misinterpret.

Solution

The ZMX 3D Sensor has been designed to monitor a wide area. Its three-dimensional field of view and 2.5-meter range ensures that it can accurately detect objects within the full space that the cart occupies. A single ZMX can observe the cart as it fills up with packages and send a notification signal when the cart contents reach a predefined height, regardless of object sizes, angles, or positions. This active monitoring prevents cart overflows.

Ensuring Proper Stacking Heights for Palleted Items

Challenge

Warehouses, factories, and other operations that transport or store goods in bulk need to make sure that products are not stacked too high on pallets. Whether operators use forklifts or pallet jacks, excessive stacking heights can be unstable, risking damage, injury, and lost productivity in the event of tipping. A sensor is needed to monitor the full area of a pallet and alert workers if a specific stacking height is exceeded.

Solution

ZMX sensors use laser and digital imaging technology to detect objects in a wide, three-dimensional field of view. This provides better accuracy for monitoring pallet heights than can be achieved with fine-point photoelectric or ultrasonic sensors, because the full area of a pallet can be monitored. This not only prevents items from being stacked to unstable heights, but it also ensures that they do not extend beyond the reach of automated shrink-wrap machines.

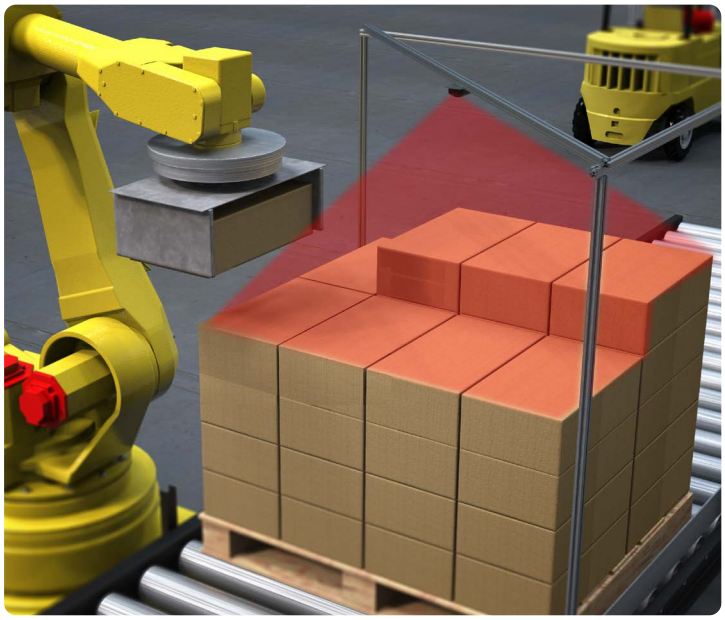

ZMX 3D Time of Flight Sensor

Series	Sensing Mode		Output	Sensing Range	Field of View	Function		Connector
ZMX	—	**3D**	**E**	**2500**	**H**	**F**	—	**Q7**

- **3D** = 3D Time of Flight
- **E** = Industrial Ethernet/PNP/NPN/PFM
- **2500** = 2500 mm
- **H** = 60 x 45 degrees
- **F** = Fill level
- **Q7** = 4-pin integral M8
- **Q8** = 4-pin integral M12

Specifications

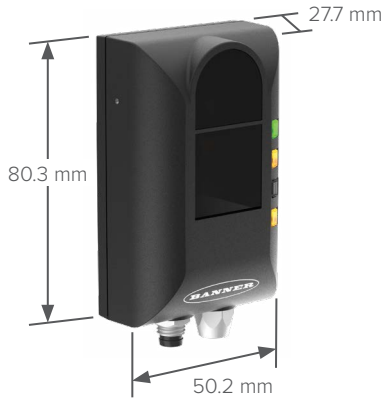

Field of View Dimensions

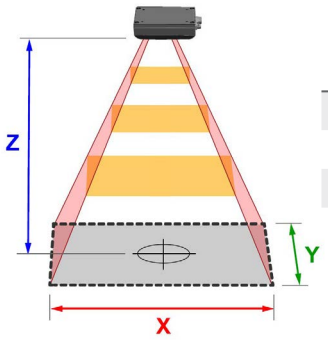

Z (mm)	X (mm)	Y (mm)
250	290	221
1000	1228	939
2500	3104	2374

Power	12 to 30 V DC
Construction	Housing: aluminium Lens Cover: acrylic Light Pipe: polycarbonate
Sensing Range	200 to 2,500 mm
Field of View	60° x 45°
Resolution	272 x 208 pixels
Outputs	Dual Configurable NPN/PNP, Pulse Pro

Communication Protocols	Modbus TCP/IP, Ethernet/IP
Connections	4-pin M8 female for power and discrete I/O 4-pin M8 male for Ethernet
Operating Conditions	–10 to +40 °C
Environmental Rating	IP65
Certifications	CE UKCA PULSE™ PRO I/O

Accessories



SMBZMXMP
Mounting plate



SMBZMXRA
Right-angle bracket



SMBZMXRM
Recessed bracket



4-Pin M8 Single-Ended
female with shield for power and I/O

- **BC-M8F4-24-2** 2 m (6.5 ft)
- **BC-M8F4-24-5** 5 m (16.4 ft)
- **BC-M8F4-24-10** 10 m (32.8 ft)



4-Pin M8 to RJ45 Double-Ended
Straight shielded connector models for Ethernet connection and PC communication

- **STP-M8MRJ45-406** 2 m (6.5 ft)
- **STP-M8MRJ45-415** 5 m (16 ft)
- **STP-M8MRJ45-430** 9 m (30 ft)



5-Pin M12 Single Ended
female with shield for power and I/O

- **BC-M12F5-22-2-SF** 2 m (6.5 ft)
- **BC-M12F5-22-5-SF** 5 m (16.4 ft)
- **BC-M12F5-22-10-SF** 10 m (32.8 ft)



4-Pin D-Code M12 to RJ45 Double-ended
Straight shielded connector models for Ethernet connection and PC communication

- **STP-M12D-406** 1.83 m (6')
- **STP-M12D-415** 4.57 m (15')
- **STP-M12D-430** 9.14 m (30')

*ZMX requires the use of a shielded cable. Only select from these models.

Banner Engineering Corp.
1-888-373-6767 • www.bannerengineering.com

© 2025 Banner Engineering Corp. Minneapolis, MN USA

PN B_51195651 rev. C