# Features

*For use with any Vision System*



- Rugged, waterproof housing, rated IP67
- Mounts directly from the back or surface mount using available brackets
- Smooth exterior for easy cleaning
- Diffused backlights for any Vision System
- Continuous or strobed operation is selectable via sensor software
- Solid-state LED matrix, in four sizes
- Available in four visible colors plus infrared
- Extremely bright light
- Completely non-corrosive
- Extremely even intensity edge-to-edge
- M12 connector

**IMPORTANT:** Read the following instructions before operating the light. Please download the complete LED Series Sealed Backlight technical documentation, available in multiple languages, from www.bannerengineering.com for details on the proper use, applications, Warnings, and installation instructions of this device.

**IMPORTANT:** Lea el siguiente instructivo antes de operar el luminario. Por favor descargue desde www.bannerengineering.com toda la documentación técnica de los LED Series Sealed Backlight, disponibles en múltiples idiomas, para detalles del uso adecuado, aplicaciones, advertencias, y las instrucciones de instalación de estos dispositivos.

**IMPORTANT:** Lisez les instructions suivantes avant d'utiliser le luminaire. Veuillez télécharger la documentation technique complète des LED Series Sealed Backlight sur notre site www.bannerengineering.com pour les détails sur leur utilisation correcte, les applications, les notes de sécurité et les instructions de montage.

# Models

| Models | LED Color | Wavelength | Lighted Area |
|---|---|---|---|
| LEDIB75X150PW2-XQ | Infrared | 850 nm | 75 mm x 150 mm (2.95 in x 5.91 in) |
| LEDRB75X150PW2-XQ | Visible Red | 633 nm | |
| LEDBB75X150PW2-XQ | Blue | 469 nm | |
| LEDGB75X150PW2-XQ | Green | 525 nm | |
| LEDWB75X150PW2-XQ | White | 6500 K | |
| LEDIB150X150PW2-XQ | Infrared | 850 nm | 150 mm x 150 mm (5.91 in x 5.91 in) |
| LEDRB150X150PW2-XQ | Visible Red | 633 nm | |
| LEDBB150X150PW2-XQ | Blue | 469 nm | |
| LEDGB150X150PW2-XQ | Green | 525 nm | |
| LEDWB150X150PW2-XQ | White | 6500 K | |
| LEDIB225X150PW2-XQ | Infrared | 850 nm | 225 mm x 150 mm (8.86 in x 5.91 in) |
| LEDRB225X150PW2-XQ | Visible Red | 633 nm | |
| LEDBB225X150PW2-XQ | Blue | 469 nm | |
| LEDGB225X150PW2-XQ | Green | 525 nm | |
| LEDWB225X150PW2-XQ | White | 6500 K | |
| LEDIB300X150PW2-XQ | Infrared | 850 nm | 300 mm x 150 mm (11.81 in x 5.91 in) |
| LEDRB300X150PW2-XQ | Visible Red | 633 nm | |
| LEDBB300X150PW2-XQ | Blue | 469 nm | |
| LEDGB300X150PW2-XQ | Green | 525 nm | |
| LEDWB300X150PW2-XQ | White | 6500 K | |

Original Instructions
15-Jan-26

© Banner Engineering Corp. All rights reserved.
www.bannerengineering.com

149837
p/n: 149837 Rev. H

ПРОМЭЛЕКТРОНИКА/ sales@prom-elec.com

# Wiring

| Wire Purpose | Cable Wire Color[1] | Continuous On Mode | Strobed Mode | | *Presence*Plus Pro Controller Terminal Block |
|---|---|---|---|---|---|
| **Power Wires** | **Brown (1)** | +24 V DC | +24 V DC | | Pin 01[2] |
| | **Blue (3)** | common | common | | Pin 02 |
| **Strobe Polarity Control** | **Gray (5)** | open | **Active Low:** open | | Open — Active Low |
| | | | **Active High:** connect to common (Blue wire) | | Pin 02 — Active High |
| **Strobe Voltage Wires** | **White (2)** | open | 0 V DC = ON (Active Low) | +5 V DC to 24 V DC = OFF (Active Low) | Pin 04 |
| | | | 0 V DC = OFF (Active High) | +5 V DC to 24 V DC = ON (Active High) | |
| | **Black (4)** | open | Strobe common | | Pin 02 |

*Pinouts for Mating Cable*

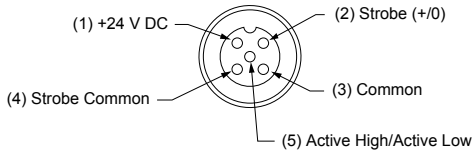


# Specifications

**Light Source**

LED; wavelengths:

| LED Color | Wavelength |
|---|---|
| Infrared | 850 nm |
| Visible Red | 633 nm |
| Blue | 469 nm |
| Green | 525 nm |
| White | 6500 K |

**Supply Voltage and Current**

75 mm x 150 mm models: 24 V DC ± 10% at 550 mA maximum

150 mm x 150 mm models: 24 V DC ± 10% at 1.1 A maximum

225 mm x 150 mm models: 24 V DC ± 10% at 1.65 A maximum

300 mm x 150 mm models: 24 V DC ± 10% at 2.2 A maximum

Use only with a suitable Class 2 power supply (UL) or SELV power supply (CE)

See the electrical characteristics on the product label.

**Connections**

Integral 5-pin M12 male quick-disconnect connector, accessory cordset required

**Operating Conditions**

**Temperature:** 0 °C to +50 °C (+32 °F to +122 °F)

**Humidity:** 95% maximum relative humidity (non-condensing)

**Illumination**

Diffused for use in applications needing a backlit light

**Useful Life**

B50/L50 Lifetime > 100,000 hours (Infrared, Red)

B50/L50 Lifetime > 90,000 hours (Blue, Green, White)

**Construction**

Black Valox™ housing; acrylic window

**Environmental Rating**

IP67

**Certification**

Banner Engineering BV
Park Lane, Culliganlaan 2F bus 3
1831 Diegem, BELGIUM

c UL us LISTED

[1] For Banner-supplied wire.
[2] When connecting the light to a *Presence*PLUS Pro controller terminal block, the controller supply must be 24 V DC ± 10%.


© Banner Engineering Corp. All rights reserved.

**Required Overcurrent Protection**

**WARNING:** Electrical connections must be made by qualified personnel in accordance with local and national electrical codes and regulations.

Overcurrent protection is required to be provided by end product application per the supplied table.

Overcurrent protection may be provided with external fusing or via Current Limiting, Class 2 Power Supply.

Supply wiring leads < 24 AWG shall not be spliced.

For additional product support, go to www.bannerengineering.com.

| Supply Wiring (AWG) | Required Overcurrent Protection (A) | Supply Wiring (AWG) | Required Overcurrent Protection (A) |
|---|---|---|---|
| 20 | 5.0 | 26 | 1.0 |
| 22 | 3.0 | 28 | 0.8 |
| 24 | 2.0 | 30 | 0.5 |

# FCC Part 15 Class A for Unintentional Radiators

This equipment has been tested and found to comply with the limits for a Class A digital device, pursuant to Part 15 of the FCC Rules. These limits are designed to provide reasonable protection against harmful interference when the equipment is operated in a commercial environment. This equipment generates, uses, and can radiate radio frequency energy and, if not installed and used in accordance with the instruction manual, may cause harmful interference to radio communications. Operation of this equipment in a residential area is likely to cause harmful interference in which case the user will be required to correct the interference at his own expense.

(Part 15.21) Any changes or modifications not expressly approved by the party responsible for compliance could void the user's authority to operate this equipment.

# Industry Canada ICES-003(A)

This device complies with CAN ICES-3 (A)/NMB-3(A). Operation is subject to the following two conditions: 1) This device may not cause harmful interference; and 2) This device must accept any interference received, including interference that may cause undesired operation.

Cet appareil est conforme à la norme NMB-3(A). Le fonctionnement est soumis aux deux conditions suivantes : (1) ce dispositif ne peut pas occasionner d'interférences, et (2) il doit tolérer toute interférence, y compris celles susceptibles de provoquer un fonctionnement non souhaité du dispositif.

# Dimensions

All measurements are listed in millimeters [inches], unless noted otherwise. The measurements provided are subject to change.

*75 mm × 150 mm models*

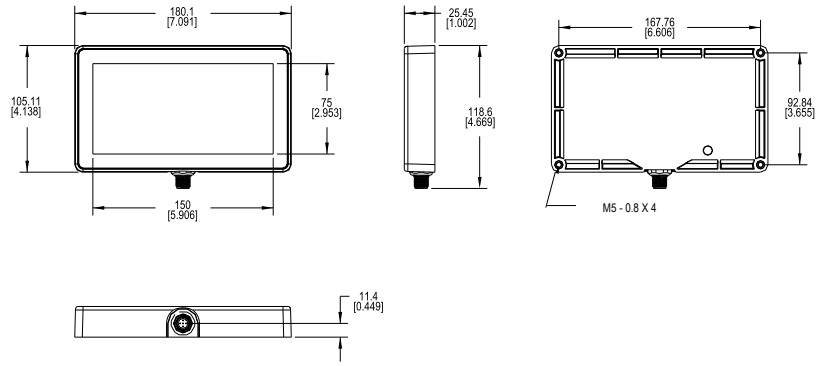


*150 mm × 150 mm models*

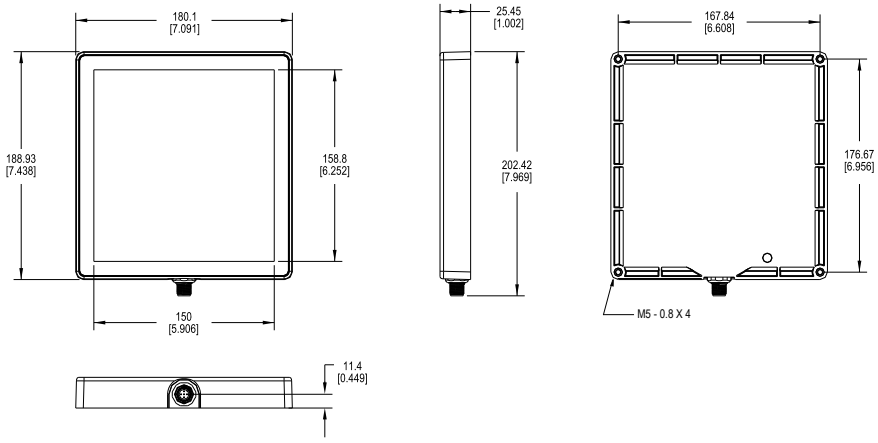



© Banner Engineering Corp. All rights reserved.
www.bannerengineering.com

*225 mm × 150 mm models*

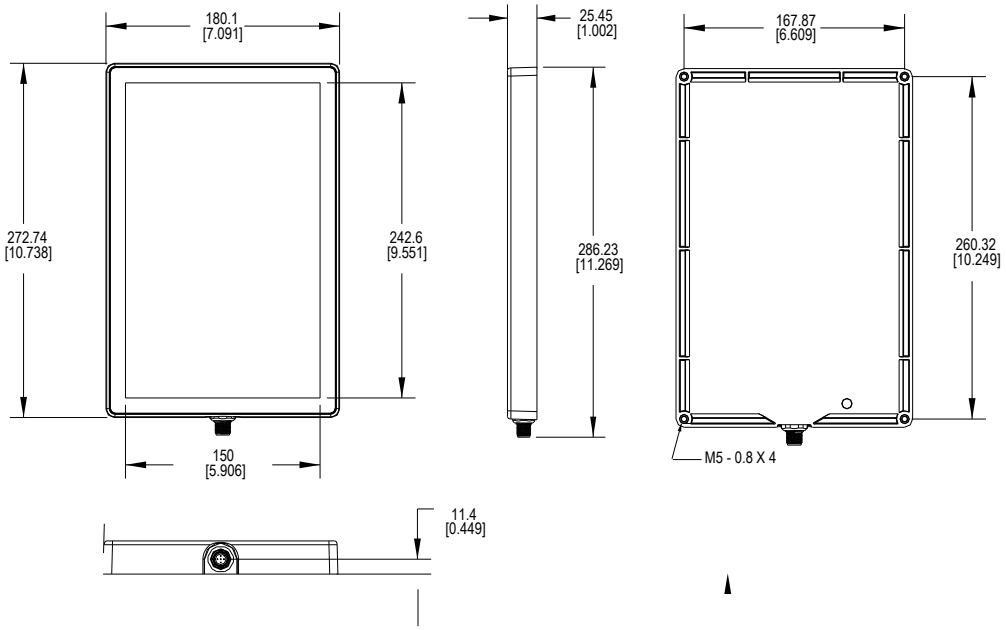


*300 mm × 150 mm models*

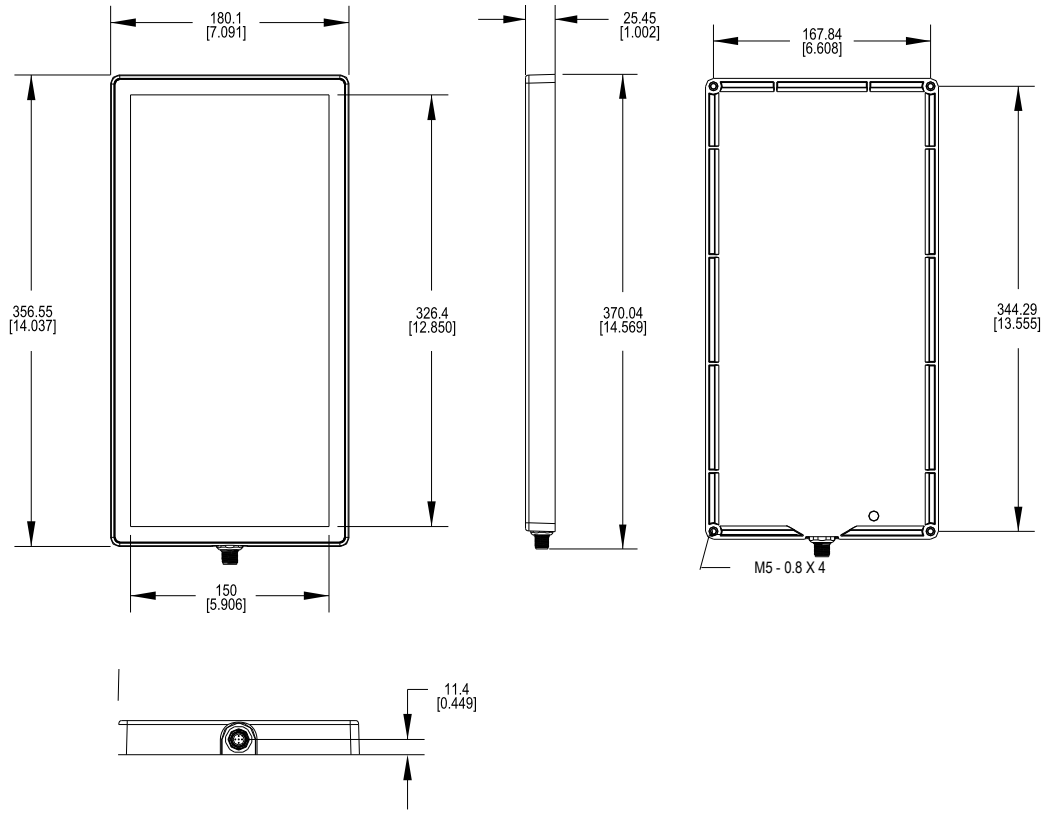



© Banner Engineering Corp. All rights reserved.
www.bannerengineering.com

# Accessories

## Cordsets

| 5-Pin Single-Ended M12 Female Cordsets | | | | |
|---|---|---|---|---|
| **Model** | **Length** | **Style** | **Dimensions** | **Pinout (Female)** |
| **MQDC20-506** | 2 m (6.56 ft) | Straight | 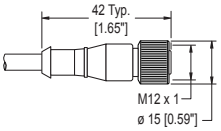 | 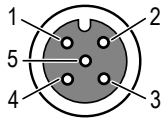 1 = Brown<br>2 = White<br>3 = Blue<br>4 = Black<br>5 = Gray |
| **MQDC20-515** | 5 m (16.4 ft) | | | |
| **MQDC20-530** | 9 m (29.5 ft) | | | |

| 5-Pin Single-Ended M12 Female Stainless Steel Nut Cordsets | | | | |
|---|---|---|---|---|
| **Model** | **Length** | **Style** | **Dimensions** | **Pinout (Female)** |
| **MQDC20SS-506** | 2 m (6.52 ft) | Straight | 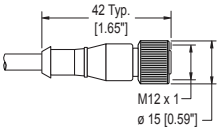 | 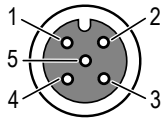 1 = Brown<br>2 = White<br>3 = Blue<br>4 = Black<br>5 = Gray |
| **MQDC20SS-515** | 5 m (16.4 ft) | | | |
| **MQDC20SS-530** | 9 m (29.5 ft) | | | |

## Brackets

**SMBBSSM**

- 316 stainless steel bracket and hardware
- Includes 2 brackets; four M5 socket drive, button head screws to attach to light
- CAD Files: DXF, PDF, IGS, STP

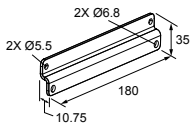


# Banner Engineering Corp Limited Warranty

Banner Engineering Corp. warrants its products to be free from defects in material and workmanship for one year following the date of shipment. Banner Engineering Corp. will repair or replace, free of charge, any product of its manufacture which, at the time it is returned to the factory, is found to have been defective during the warranty period. This warranty does not cover damage or liability for misuse, abuse, or the improper application or installation of the Banner product.

**THIS LIMITED WARRANTY IS EXCLUSIVE AND IN LIEU OF ALL OTHER WARRANTIES WHETHER EXPRESS OR IMPLIED (INCLUDING, WITHOUT LIMITATION, ANY WARRANTY OF MERCHANTABILITY OR FITNESS FOR A PARTICULAR PURPOSE), AND WHETHER ARISING UNDER COURSE OF PERFORMANCE, COURSE OF DEALING OR TRADE USAGE.**

This Warranty is exclusive and limited to repair or, at the discretion of Banner Engineering Corp., replacement. **IN NO EVENT SHALL BANNER ENGINEERING CORP. BE LIABLE TO BUYER OR ANY OTHER PERSON OR ENTITY FOR ANY EXTRA COSTS, EXPENSES, LOSSES, LOSS OF PROFITS, OR ANY INCIDENTAL, CONSEQUENTIAL OR SPECIAL DAMAGES RESULTING FROM ANY PRODUCT DEFECT OR FROM THE USE OR INABILITY TO USE THE PRODUCT, WHETHER ARISING IN CONTRACT OR WARRANTY, STATUTE, TORT, STRICT LIABILITY, NEGLIGENCE, OR OTHERWISE.**

Banner Engineering Corp. reserves the right to change, modify or improve the design of the product without assuming any obligations or liabilities relating to any product previously manufactured by Banner Engineering Corp. Any misuse, abuse, or improper application or installation of this product or use of the product for personal protection applications when the product is identified as not intended for such purposes will void the product warranty. Any modifications to this product without prior express approval by Banner Engineering Corp will void the product warranties. All specifications published in this document are subject to change; Banner reserves the right to modify product specifications or update documentation at any time. Specifications and product information in English supersede that which is provided in any other language. For the most recent version of any documentation, refer to: www.bannerengineering.com.

For patent information, see www.bannerengineering.com/patents.

## Mexican Importer

Banner Engineering de Mèxico, S. de R.L. de C.V. | David Alfaro Siqueiros 103 Piso 2 Valle oriente | San Pedro Garza Garcia Nuevo Leòn, C. P. 66269

81 8363.2714


© Banner Engineering Corp. All rights reserved.
www.bannerengineering.com