Features

Banner's WLB72 is a very bright LED luminaire that features an even light output for a no glare 'glow'. The WLB72 series is designed for a wide variety of environments and applications, including but not limited to work stations, machine lighting, and low bay lighting. The WLB72 uses advanced LED lighting technology to provide a high-quality and maintenance free industrial lighting solution.

- Increase worker productivity and ergonomics with bright, high-quality, uniform light
- Exceptionally energy efficient for overall cost savings
- Durable light with a metal housing and shatter-resistant window
- Intensity can be controlled from 5% to 100% using a compatible dimmer
- Rated for use at 120 V AC to 277 V AC
- Fast installation with multiple integrated mounting options or accessory brackets



The WLB72 Industrial LED Light Bars are continuous run models that come with 1/2-inch conduit knockouts on the side, back, and both end caps that allow for lights to be cascaded or "daisy-chained" for a continuous length of light. WLB72 models come with a five year, limited warranty. To view or download the latest technical information about this product, including specifications, dimensions, accessories, and wiring, go to www.bannerengineering.com.

IMPORTANT: Read the following instructions before operating the light. Please download the complete WLB72B Industrial LED Light Bar technical documentation, available in multiple languages, from www.bannerengineering.com for details on the proper use, applications, Warnings, and installation instructions of this device.

IMPORTANT: Lea el siguiente instructivo antes de operar el luminario. Por favor descargue desde www.bannerengineering.com toda la documentación técnica de los WLB72B Industrial LED Light Bar, disponibles en múltiples idiomas, para detalles del uso adecuado, aplicaciones, advertencias, y las instrucciones de instalación de estos dispositivos.

IMPORTANT: Lisez les instructions suivantes avant d'utiliser le luminaire. Veuillez télécharger la documentation technique complète des WLB72B Industrial LED Light Bar sur notre site www.bannerengineering.com pour les détails sur leur utilisation correcte, les applications, les notes de sécurité et les instructions de montage.

Models

Basic LED Light Bar (AC) Models

Model Name	Lighted Length	Cascadable	Color	Window	Control	Connection
WLB72BZCW1200DACT	1200 mm	Yes	Daylight White	Diffused Window	0 V DC to 10 V DC Analog Dimming	Conduit Entry
WLB72BZCW2400DACT	2400 mm					

Original Instructions
28-Aug-25

© Banner Engineering Corp. All rights reserved.
www.bannerengineering.com

210184
p/n: 210184 Rev. G

ПРОМЭЛЕКТРОНИКА/ sales@prom-elec.com

Installation Instructions

Install the Light

Removing the cover

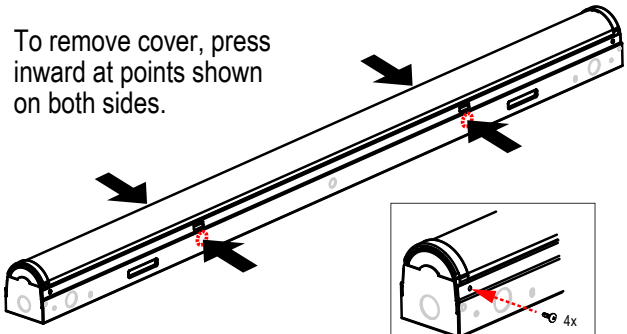

*The 1200 mm model is shown and has 4 snap features.
The 2400 mm model has 8 snap features.

Self-tapping screw holes (4x)

WARNING:
- **Risk of Electric Shock**
- Failure to follow these instructions could result in serious injury or death.
- Installation and service of luminaries should be performed by a qualified licensed electrician.
- Disconnect or turn off power before installing, removing, or servicing luminaire. Luminaire must be installed and connected in accordance with the National Electrical Code (NEC) and any applicable local code requirements. Luminaire must be supplied with a 120 V AC to 277 V AC 50/60 Hz fuse box or circuit breaker.

To mount the WLB72B Industrial LED Light Bar, follow these steps.

1. Remove luminaire from packaging and inspect for damage before installing.
2. Determine the mounting method and location. The WLB72 is rated for wall, ceiling, or under cabinet mounting. Optional mounting brackets are available, see .
3. Remove the cover from the housing by pressing inward at the snap features on the housing, starting at one end and progressing to the other.
4. Place the light in the mounting location and mark the positions of the light mounting holes.
5. Drill the holes and use the appropriate screws to secure the luminaire to the mounting location.

Wire the Light

Follow these steps to wire the WLB72 Industrial LED Light Bar.

NOTE: Shielded wiring is required for dimming control for both model lengths.

1200 mm Model

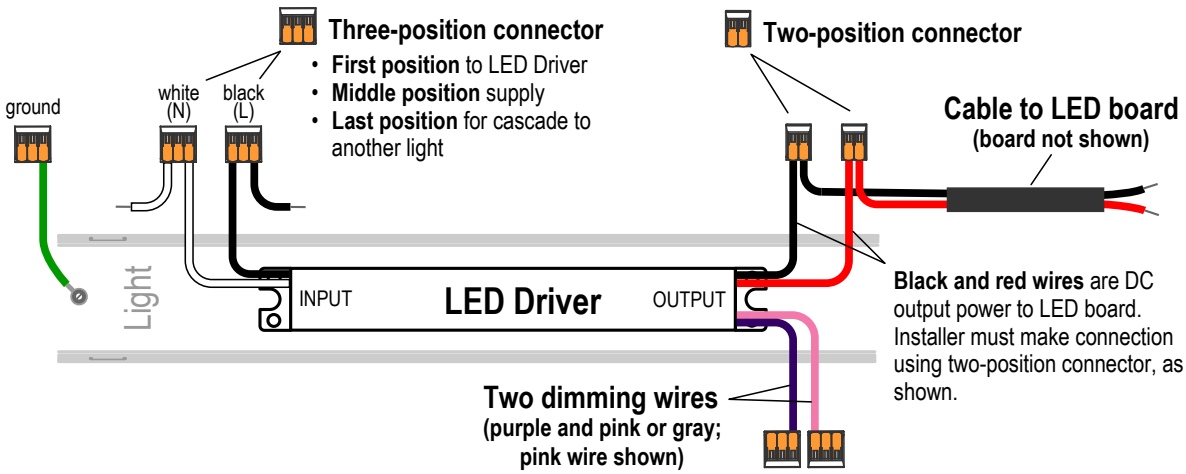

© Banner Engineering Corp. All rights reserved.
www.bannerengineering.com

2400 mm Model

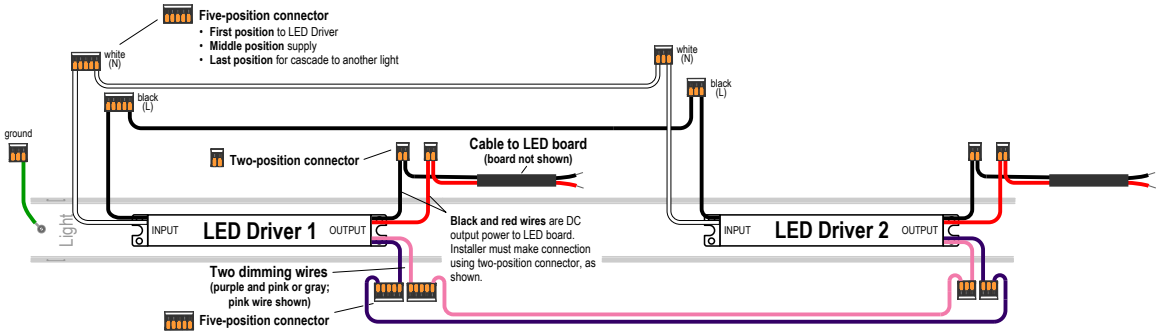

1. Remove the cover from the housing by pressing inward at the two snap locations on the housing.
2. Connect the power by removing the selected knockout and installing either 1/2-inch conduit or an AC power cord with supplied cord grip strain relief. If you are using rigid conduit, the conduit hub/connector must be approved for use in dry or damp locations and must be connected to the conduit before the hub/connector is connected to the luminaire. The supplied cord grip diameter range is 4.3 mm to 11.4 mm.
3. Connect the incoming supply wires to the LED Driver input connectors according to the wiring diagram.
    a. For 2400 mm models, connect the LED Driver input wires together using supplied wiring.
4. Connect the ground wire to the three-position ground connector.
5. If you are using 0 V to 10 V analog dimming, connect to the LED Driver dimming connectors according to the wiring diagram.
    a. For 2400 mm models, connect the LED Driver dimming wires together using supplied wiring.
6. Attach the red and black wires from the cover LED board to the output connectors on the Driver.
    a. For 2400 mm models, there are two Drivers, and two sets of red and black wires.
7. Re-attach the cover to the housing by snapping it into place. Secure the cover to the housing by using a minimum of one self tapping screw on each end of the housing (four screws are provided).
8. Repeat these steps on other end of the luminaire if you are connecting to more than one luminaire in a continuous run.

Wiring

Diagram	Wire	Connection
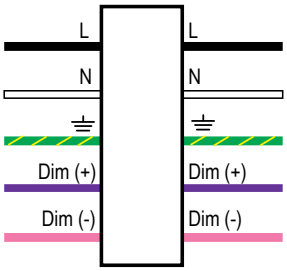	L - Black	Line/Hot
	N - White	Neutral
	⏚ - Green/Yellow	Earth ground
	Dim (+) - Purple	0 V DC to 10 V DC analog dimming
	Dim (-) - Pink or Gray[1]	Return analog dimming

Specifications

Supply Voltage

Nominal voltage: 120 V AC to 277 V AC, 60 Hz in North America

Nominal voltage: 120 V AC to 277 V AC, 50/60 Hz outside North America

Power factor: > 0.95 at 120 V AC and > 0.90 at 277 V AC

Total harmonic distortion (THD): < 20%

See electrical characteristics on product label

Supply Current

Lighted Length (mm)	Max. Current Draw (A) at 90 V AC	Typical Current Draw (A)		
		120 V AC	230 V AC	277 V AC
1200	0.850	0.43	0.22	0.18
2400	1.700	0.86	0.44	0.36

Supply Protection Circuitry

Protected against transient voltages

[1] Pink wire shown in diagram. Newer models use a pink wire. Older models use a gray wire.

© Banner Engineering Corp. All rights reserved.
www.bannerengineering.com

Light Characteristics

Daylight White Efficacy: 130 lumens/watt typical at 120 V AC at 25 °C (77 °F)

CRI: 82, typical

Model	Color	Color Temperature (CCT)	Lumens (Typical at 25 °C)
1200	Daylight White	5000 K (±300 K)	6800
2400	Daylight White	5000 K (±300 K)	13600

DesignLight Consortium® DLC Premium Qualified Product

Model:	WLB72BZCW1200DACT
Primary Use:	Low-Bay Luminaires for Commercial and Industrial Buildings Direct Linear Ambient Luminaries
Model:	WLB72BZCW2400DACT
Primary Use:	Direct Linear Ambient Luminaries

Certifications and Approvals

Banner Engineering BV
Park Lane, Culliganlaan 2F bus 3
1831 Diegem, BELGIUM

UL/cULus E470122

Dimming

Compatible with 0 V to 10 V analog LED dimming, dimmable to 5% intensity

Shielded wiring required for dimming control.

Compatible dimmers are listed in Accessories

Dimming current: <0.2 mA

Construction

Galvanized steel with corrosion resistant polyester powder coat, polycarbonate window and end caps.

Mounting

Compatible with a variety of common mounting and hanging methods. Housing includes six mounting holes for surface mounting.

Several optional mounting brackets are available (see Accessories)

Connections

1/2-inch trade size conduit knockout in nine locations

Weight

1200 model: 2.8 kg (6.2 lbs)

2400 model: 5.6 kg (12.3 lbs)

Environmental Rating

IP20

LED Lifetime

When operating within specifications, output will decrease less than 30% after 50,000 hours.

Operating Temperature

Surface Mount Installation: –40 °C to +50 °C (–40 °F to +122 °F)

85% at +50 °C maximum relative humidity (non-condensing)

Storage Temperature

–40 °C to +70 °C (–40 °F to +158 °F)

Vibration and Mechanical Shock

Vibration: 10 Hz to 55 Hz, 0.5 mm peak-to-peak amplitude per IEC 60068-2-6 (5 minute sweep, 30 minute dwell)

Shock: 5G 11 ms duration, half sine wave per IEC 60068-2-27

Impact: IK07 (IEC 60068-2-75)

NOTE: Vibration and shock testing performed on 1200 mm model

Application Notes

When connecting continuous run/cascadable lights in series, it is important not to exceed maximum current limitations of 14 AWG, 75 °C wire, in accordance with the National Electrical Code (NEC) and any applicable local code requirements.

Two or more lights installed in parallel must maintain a 150 mm (6 inch) spacing to maintain a 50 °C operating temperature.

FCC Part 15 Class B for Unintentional Radiators

(Part 15.105(b)) This equipment has been tested and found to comply with the limits for a Class B digital device, pursuant to part 15 of the FCC Rules. These limits are designed to provide reasonable protection against harmful interference in a residential installation. This equipment generates, uses, and can radiate radio frequency energy and, if not installed and used in accordance with the instructions, may cause harmful interference to radio communications. However, there is no guarantee that interference will not occur in a particular installation. If this equipment does cause harmful interference to radio or television reception, which can be determined by turning the equipment off and on, the user is encouraged to try to correct the interference by one or more of the following measures:

- Reorient or relocate the receiving antenna.
- Increase the separation between the equipment and receiver.
- Connect the equipment into an outlet on a circuit different from that to which the receiver is connected.
- Consult the dealer or an experienced radio/TV technician for help.

(Part 15.21) Any changes or modifications not expressly approved by the party responsible for compliance could void the user's authority to operate this equipment.

Industry Canada ICES-003(B)

This device complies with CAN ICES-3 (B)/NMB-3(B). Operation is subject to the following two conditions: 1) This device may not cause harmful interference; and 2) This device must accept any interference received, including interference that may cause undesired operation.

Cet appareil est conforme à la norme NMB-3(B). Le fonctionnement est soumis aux deux conditions suivantes : (1) ce dispositif ne peut pas occasionner d'interférences, et (2) il doit tolérer toute interférence, y compris celles susceptibles de provoquer un fonctionnement non souhaité du dispositif.

© Banner Engineering Corp. All rights reserved.
www.bannerengineering.com

Dimensions

All measurements are listed in millimeters, unless noted otherwise. The measurements provided are subject to change.

1200 mm Model

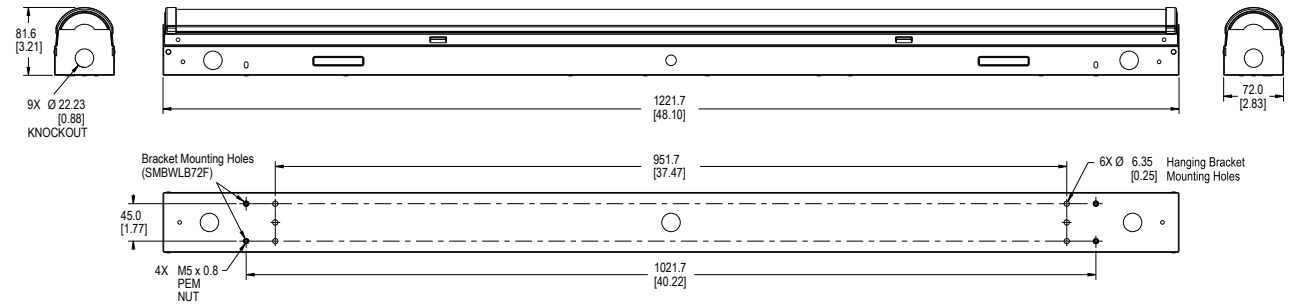

2400 mm Model

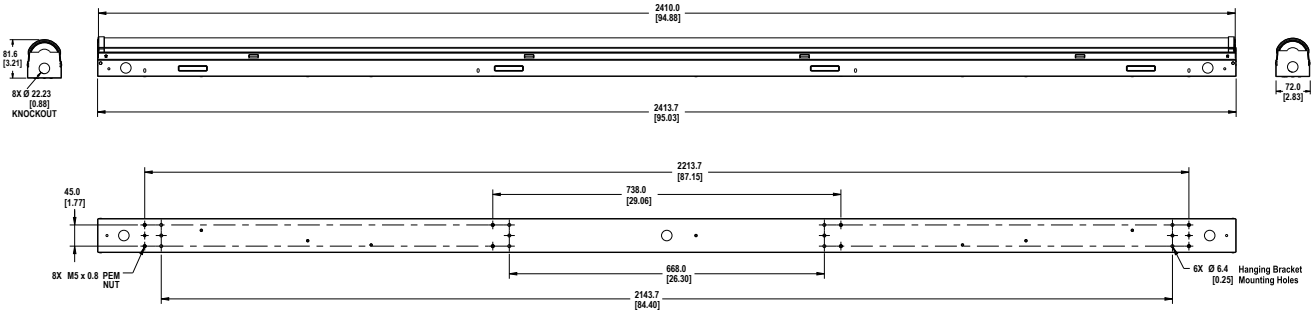

Photometric Data

1200 mm Model

Illuminance at a Distance

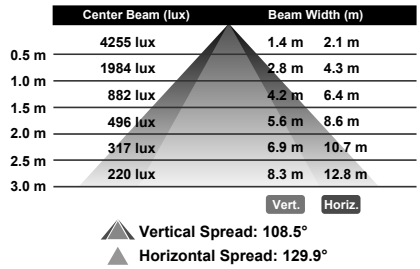

Isolux Pattern

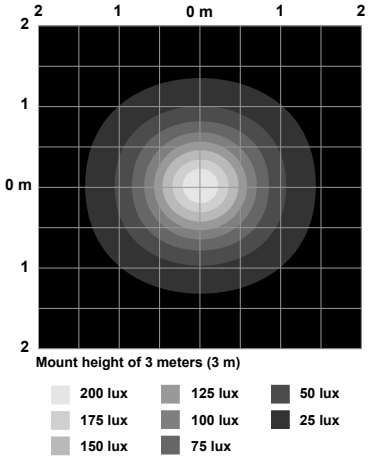

Polar Candela Distribution

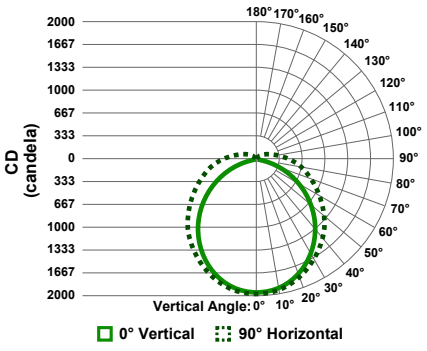

© Banner Engineering Corp. All rights reserved.
www.bannerengineering.com

2400 mm Model

Illuminance at a Distance

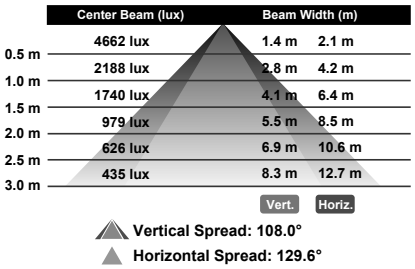

Isolux Pattern



Polar Candela Distribution

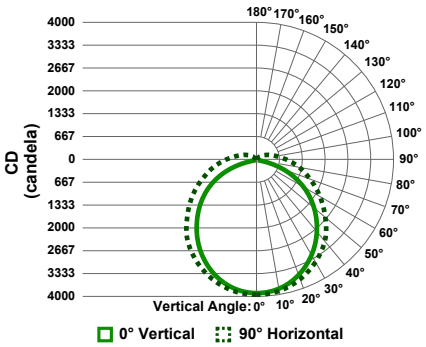

Accessories

Brackets

All measurements are listed in millimeters, unless noted otherwise. The measurements provided are subject to change.

LMBWLB72F
- Stainless steel
- Includes two surface mount brackets and four screws for mounting onto the housing

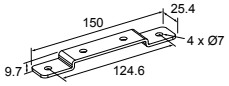

LMBWLB72HK
- Hanging bracket kit allows for suspended installation
- Includes two hanging bracket assemblies
- Cables allow for 60 degrees of angle adjustment

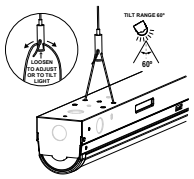

LMBWLB72RAS
- Swivel brackets allow for 180° of movement in seven fixed positions
- Stainless steel
- Includes two swivel bracket assemblies and eight screws

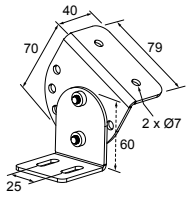

NOTE: The 2400 mm model requires four brackets for mounting. Order two of the above bracket model numbers.

LMBWLB72R1200
- Rail bracket for extrusion mounting for 1200 mm WLB72 models
- Anodized aluminum
- T-nut hardware included

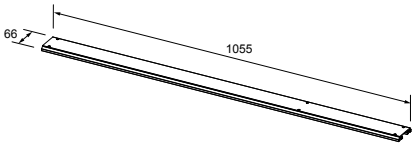

© Banner Engineering Corp. All rights reserved.
www.bannerengineering.com

LMBWLB72R2400

- Rail bracket for extrusion mounting for 2400 mm WLB72 models
- Anodized aluminum
- T-nut hardware included

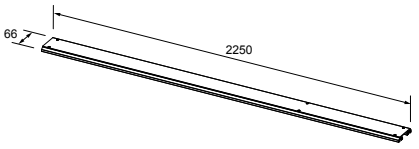

Installing and Adjusting the WLB72 Hanging Bracket

To install the hanging bracket, assemble the bracket components as shown.

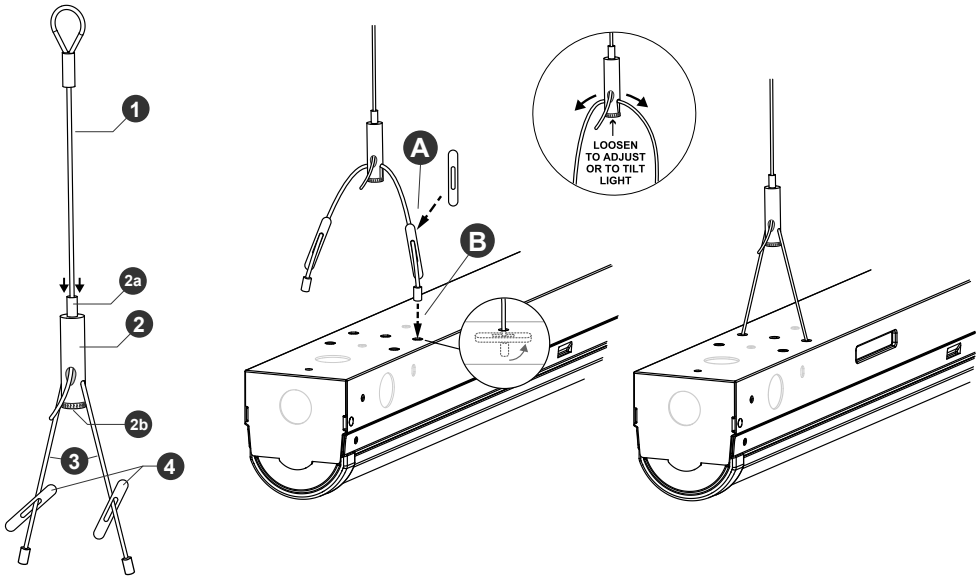

1. Hanging cable
2. Gripper

2a. Plunger

2b. Cross cable nut

3. Cross cable
4. Bracket

When feeding the cable through the gripper, allow at least one inch of cable beyond the gripper. Do not feed any excess cable into the light housing. To adjust the gripper position:

1. Lift all weight off the gripper.
2. Press the plunger to release the cable.
3. Slide the gripper to a new position (A).
4. Release the plunger.
5. Tighten the cross cable nut manually (B).

Other Accessories

EBATTWLB72 Emergency LED Driver (Battery) Kit
When AC power fails, the emergency driver will provide 90 minutes of emergency light. When the AC power is restored, the emergency driver automatically returns to the charge mode.

- The kit includes everything needed to install battery inside the WLB72 housing
- Smart charger for low energy consumption
- Class 2 output, UL 1310 certified, CSA 22.2 No. 223-91 compliant
- Meets CEC Title 20 (California Energy Commission) standards
- Maintenance free Nickel-Cadmium battery, 7 to 10 year life expectancy
- Includes illuminated battery test switch

NOTE: Emergency LED Driver (Battery) Kit is available for the 1200 mm length and carries a cULus listing for use in the USA, Canada, and other countries that accept products tested to this standard. Emergency LED Drivers are available regionally that are compatible with the WLB72B

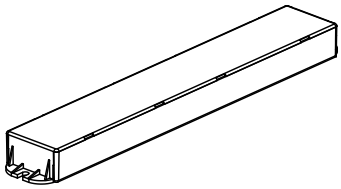

Maximum Battery Case Size

60 mm × 40 mm × 400 mm (Width × Height × Length)

Electrical Input Voltage

120 V AC to 277 V AC, 50/60 Hz

Emergency Battery output must supply a constant current and provide 10 Watts at 45 V DC in the emergency mode for 90 minutes.

© Banner Engineering Corp. All rights reserved.
www.bannerengineering.com

ACC-WLB72-CSR-5 Cord Grip Accessory (5 pack with nuts)

- One strain relief is included with each WLB72 light
- Cable diameter: 4.3 mm to 11.4 mm (0.17 in to 0.45 in)
- For use in clearance holes 22.2 mm (0.875 in) or threaded holes ½ NPT
- Nylon 6/6 construction with TPE sealing gland resists common solvents
- IP68 rated (70 psi, 5 Bar)
- Flammability Rating 94V-2
- Temperature: –40 °C to 115 °C (–40 °F to 239 °F)

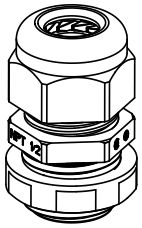

Compatible Wall Dimmer Models

Banner has tested the listed dimmers to verify compatibility with the WLB72B light, but cannot guarantee dimmer performance. Reference the dimmer manufacturer's instructions for installation, application, and regulatory compliance questions as each dimmer installation is unique.

AC Dimmers:

Lutron Diva Family

DVSCTV
DVTV
DVSTV
DVSCSTV

Lutron Nova Family

NTSTV-DV

Lutron Maestro Family (with sensor)

MS-Z101
MS-Z101-V

Leviton Illumatech Family

IP710-LFZ
IP710-DLZ

Leviton Renoir II Family

AWSMT-7DW
AWSMG-7DW
AWRMG-7DW

Low Voltage Dimmer (no AC required):

LEDdynamics

A019

*0 V to 10 V sinking controls driver dimming wires only. Dimmer does not have a switch to shut off AC power to the light.

Banner Engineering Corp Limited Warranty

Banner Engineering Corp. warrants its products to be free from defects in material and workmanship for one year following the date of shipment. Banner Engineering Corp. will repair or replace, free of charge, any product of its manufacture which, at the time it is returned to the factory, is found to have been defective during the warranty period. This warranty does not cover damage or liability for misuse, abuse, or the improper application or installation of the Banner product.

THIS LIMITED WARRANTY IS EXCLUSIVE AND IN LIEU OF ALL OTHER WARRANTIES WHETHER EXPRESS OR IMPLIED (INCLUDING, WITHOUT LIMITATION, ANY WARRANTY OF MERCHANTABILITY OR FITNESS FOR A PARTICULAR PURPOSE), AND WHETHER ARISING UNDER COURSE OF PERFORMANCE, COURSE OF DEALING OR TRADE USAGE.

This Warranty is exclusive and limited to repair or, at the discretion of Banner Engineering Corp., replacement. **IN NO EVENT SHALL BANNER ENGINEERING CORP. BE LIABLE TO BUYER OR ANY OTHER PERSON OR ENTITY FOR ANY EXTRA COSTS, EXPENSES, LOSSES, LOSS OF PROFITS, OR ANY INCIDENTAL, CONSEQUENTIAL OR SPECIAL DAMAGES RESULTING FROM ANY PRODUCT DEFECT OR FROM THE USE OR INABILITY TO USE THE PRODUCT, WHETHER ARISING IN CONTRACT OR WARRANTY, STATUTE, TORT, STRICT LIABILITY, NEGLIGENCE, OR OTHERWISE.**

Banner Engineering Corp. reserves the right to change, modify or improve the design of the product without assuming any obligations or liabilities relating to any product previously manufactured by Banner Engineering Corp. Any misuse, abuse, or improper application or installation of this product or use of the product for personal protection applications when the product is identified as not intended for such purposes will void the product warranty. Any modifications to this product without prior express approval by Banner Engineering Corp will void the product warranties. All specifications published in this document are subject to change; Banner reserves the right to modify product specifications or update documentation at any time. Specifications and product information in English supersede that which is provided in any other language. For the most recent version of any documentation, refer to: www.bannerengineering.com.

For patent information, see www.bannerengineering.com/patents.

Mexican Importer

Banner Engineering de Mèxico, S. de R.L. de C.V. | David Alfaro Siqueiros 103 Piso 2 Valle oriente | San Pedro Garza Garcia Nuevo Leòn, C. P. 66269

81 8363.2714

© Banner Engineering Corp. All rights reserved.
www.bannerengineering.com